SONY

DIGITAL VIDEOCASSETTE RECORDER

DNW-A28
DNW-A28P

BETACAM SX

MAINTENANCE MANUAL

Volume 2 1st Edition

Serial No. 10001 and Higher: DNW-A28 (SY)

Serial No. 30001 and Higher: DNW-A28 (J)

Serial No. 40001 and Higher: DNW-A28P

⚠警告

このマニュアルは，サービス専用です。
お客様が，このマニュアルに記載された設置や保守，点検，修理などを行うと感電や火災，人身事故につながることがあります。
危険をさけるため，サービストレーニングを受けた技術者のみご使用ください。

設置や保守，点検，修理などを行う前に，別冊のメンテナンスマニュアルVolume 1，インストレーションマニュアル，オペレーションマニュアルのそれぞれの「安全のために」を必ずお読みください。

⚠ WARNING

This manual is intended for qualified service personnel only.
To reduce the risk of electric shock, fire or injury, do not perform any servicing other than that contained in the operating instructions unless you are qualified to do so. Refer all servicing to qualified service personnel.

⚠ WARNUNG

Die Anleitung ist nur für qualifiziertes Fachpersonal bestimmt.
Alle Wartungsarbeiten dürfen nur von qualifiziertem Fachpersonal ausgeführt werden. Um die Gefahr eines elektrischen Schlages, Feuergefahr und Verletzungen zu vermeiden, sind bei Wartungsarbeiten strikt die Angaben in der Anleitung zu befolgen. Andere als die angegeben Wartungsarbeiten dürfen nur von Personen ausgeführt werden, die eine spezielle Befähigung dazu besitzen.

⚠ AVERTISSEMENT

Ce manual est destiné uniquement aux personnes compétentes en charge de l'entretien. Afin de réduire les risques de décharge électrique, d'incendie ou de blessure n'effectuer que les réparations indiquées dans le mode d'emploi à moins d'être qualifié pour en effectuer d'autres. Pour toute réparation faire appel à une personne compétente uniquement.

Table of Contents

Manual Structure

Purpose of this manual ..... 5 (E)
Related manuals ..... 5 (E)
Contents ..... 6 (E)

1. Spare Parts

1-1. Notes on Repair Parts 1-1
1-2. Exploded Views 1-3
1-3. Electrical Parts List 1-27
  1-3-1. Frame List 1-27
  1-3-2. Cable/Harness List 1-27
  1-3-3. External Connectors List 1-29
  1-3-4. Each Board 1-31
1-4. Supplied Accessories List 1-150
1-5. Fixtures List 1-150

2. Semiconductor Pin Assignments

3. Circuit Description and Block Diagrams

Circuit Description ..... 3-3 (E)
Overall 3-7
  PSW-72 3-7
  SR-65 3-9
APR-27A 3-10
AU-249 3-11
  CP-344/344A 3-11
  PA-218 3-11
  HP-100 3-12
DEC-97 3-13
DM-114/114P 3-14
DPR-87 3-17
EQ-72 3-18
RE-150 3-19
  DC-97 3-19
  RE-158 3-19
SDI-23 3-20
SV-194A 3-21
  SE-529 3-21

SW-21 3-22
SW-22 3-22
SW-23 3-22
CT-209 3-22
SY-259B 3-23
SY-260 3-24
TG-191 3-25
CP-354 3-25
VFD assembly 3-26
VPR-34 3-27
CP-354 3-27

4. Schematic Diagrams

APR-27A 4-2
AU-249 4-8
CP-344/344A 4-16
CP-354 4-19
DEC-97 4-22
DM-114/114P 4-26
DPR-87 4-44
EQ-72 4-56
HP-100 4-64
MB-757A 4-65
PA-218 4-73
RE-150 4-75
SDI-23 4-80
SE-529 4-93
SR-65 4-93
SV-194A 4-94
SW-21 4-108
SW-22 4-111
SW-23 4-111
SY-259B 4-112
SY-260 4-120
TG-191 4-128
VFD assembly 4-134
VPR-34 4-140
Frame Wiring 4-148
CT-209 4-148
DC-97 4-149
PSW-72 4-149
RE-158 4-149

http://getMANUAL.com

5. Board Layouts

APR-27A 5-2
AU-249 5-4
CP-344/344A 5-6
CP-354 5-7
CT-209 5-7
DC-97 5-7
DEC-97 5-8
DM-114/114P 5-10
DPR-87 5-14
EQ-72 5-16
HP-100 5-17
MB-757A 5-18
PA-218 5-21
RE-150 5-22
RE-158 5-23
SDI-23 5-24
SE-529 5-27
SR-65 5-29
SV-194A 5-28
SW-21 5-30
SW-22 5-31
SW-23 5-31
SY-259B 5-32
SY-260 5-34
TG-191 5-36
VFD 5-38
LCD 5-39
VPR-34 5-40

Manual Structure

Purpose of this manual

This manual is the Maintenance manual volume 2 of digital videocassette recorder DNW-A28/A28P.

This maintenance manual (Volume 1 and 2) is intended for use by trained system and service engineers, and provides the information of maintenance and detailed service (parts replacement, guideline for adjustment, schematic diagrams, board layouts, detailed parts list).

This manual (volume 2) explains about semiconductor pin assignments, detailed parts list, block diagrams, schematic diagrams and board layouts.

Related manuals

Besides this "Maintenance manual", the following manuals are available for digital videocassette recorder DNW-A28/A28P.

- **Operation Manual (Supplied with the DNW-A28/A28P.)**
  This manual is necessary for application and operation (and installation) of the DNW-A28/A28P.

- **Installation Manual (Supplied with the DNW-A28/A28P.)**
  This manual describes the information on installing the DNW-A28/A28P.

- **Protocol Manual of Remote (9-pin) Connector (available on request)**
  This manual explains the protocol for controlling the VTR via the RS-422A (9-pin serial remote) . If this manual is required, please contact your local Sony Sales Office/Service Center.

- **"Semiconductor Pin Assignments" CD-ROM (Available on request)**
  This "Semiconductor Pin Assignments" CD-ROM allows you to search for semiconductors used in Broadcasting & Professional Systems Company equipment.
  Semiconductors that cannot be searched for on this CD-ROM are listed in the maintenance manual for the corresponding unit. The maintenance manual contains a complete list of all semiconductors and their ID Nos., and thus should be used together with the CD-ROM.
  Part number: 9-968-546-XX

Contents

This maintenance manual (volume 1 and volume 2) is organized by following sections.

Maintenance manual volume 1 (9-967-866-)

Section 1 Service Overview
Explains the information that is required to service (removal of cabinet and cassette compartment, the functions of printed circuit board, the locations of main part, fixture and measuring equipment information, board extension, NV-RAM/EE-PROM, etc.).

Section 2 Error Messages
Explains the error massages.

Section 3 Maintenance Mode
Explains each menu of the maintenance mode.

Section 4 Periodic Maintenance and Inspection
Explains the recommended periodic maintenance, the cleaning procedure and the video head tip protrusion check procedure.

Section 5 Periodic Maintenance Parts Replacement
Explains the replacement of periodic maintenance parts and overview for replacement of mechanical parts.

Section 6 Main Parts Replacement
Explains the replacement of mechanical parts (except periodic maintenance parts) and circuit boards.

Section 7 Tape Path Alignment
Explains the tape path alignment after replacement of parts that are described in Section 5 and Section 6.

Section 8 Electrical Alignment after Drum Replacement
Explains the electrical alignment associated with replacement of drum.

Section 9 Electrical Alignment
Explains the electrical alignment for the maintenance of this unit.

Maintenance manual volume 2 (9-967-867-)

Section 1 Semiconductor Pin Assignments

This section contains information on semiconductors used for unit.
It includes a complete list of the semiconductors and their ID Nos. for retrieving information on "Semiconductor Pin Assignments" CD-ROM, which is available separately.
Please refer to this section together with the "Semiconductor Pin Assignments" CD-ROM.
Information on the semiconductors not contained in the CD-ROM at the time of issue of this manual, if any, is given in this section as well.

Section 2 Spare Parts

Describes the exploded views, the mechanical parts list and the electrical parts list.

Section 3 Circuit Description and Block Diagrams

Describes the circuit description and the block diagrams of overall and each board.

Section 4 Schematic Diagrams

Describes the frame wiring and the schematic diagrams for the unit.

Section 5 Board Layouts

Describes the board layouts for the unit.

Section 1
Spare Parts

1−1. 補修部品注意事項

1. 安全重要部品

⚠警告

⚠印のついた部品は安全性を維持するために重要な部品です。したがって，交換する時は必ず指定の部品を使ってください。

2. 部品の共通化

ソニーから供給する補修用部品は，セットに使われているものと異なることがあります。
これは部品の共通化，改良等によるものです。
部品表には現時点での共通化された補修用部品が記載されています。

3. 部品の在庫

部品表のSP (Supply code) 欄に“o”で示される部品は在庫していないことがあり，納期が長くなることがあります。

4. ハーネス

部品番号の記載されていないハーネスは，サービス部品として登録されていません。
これらは，リストに展開されているコンポーネント部品で補修してください。

5. 仕向区分の表記

部品表中，下記表示のある部品は，その仕向で使用している部品です。
For J: 日本向けモデルに使用
For SY: 上記以外向けモデルに使用

1-1. Notes on Repair Parts

1. Safety Related Components Warning

WARNING

Components marked ⚠ are critical to safe operation. Therefore, specified parts should be used in the case of replacement.

2. Standardization of Parts

Some repair parts supplied by Sony differ from those used for the unit. These are because of parts commonality and improvement.
Parts list has the present standardized repair parts.

3. Stock of Parts

Parts marked with “o” at SP (Supply Code) column of the spare parts list may not be stocked. Therefore, the delivery date will be delayed.

4. Harness

Harnesses with no part number are not registered as spare parts.
In need of repair, get components shown in the list and repair using them.

5. Destination Representation

The part indicated “For J/SY” in the spare parts list is used in the unit written below.
For J: The part is used in a unit for Japan.
For SY: The part is used in a unit for regions except the above country.

1-2. Exploded Views

INDEX

Item	No.	Title	Page
Reel table T tension regulator assembly Swing gear T idler assembly Cam gear assembly S brake solenoid Intermittent gear Tape guide	1 -	Reel tables and gears	1-4
Threading gear Catcher assembly Tension regulator band assembly Slider assembly AT head assembly Tape guide	101 -	Threading link and AT head	1-6
Upper drum, Drum Brush assembly Slip ring assembly S tension regulator assembly CTL head, Full-erase head Dew condensation sensor Tape guide	201 -	Drum and S-tension regulator	1-8
Loading motor assembly Pinch roller assembly Pinch press cam assembly Video head cleaner assembly T drawer sub assembly Threading motor Gear box Tape guide	301 -	T-drawing block	1-10
Capstan motor S reel motor Timing belt REC inhibit switch assembly SV-194A board	401 -	Bottom side of mechanical deck	1-12
Cassette Compartment	501 -	Cassette compartment	1-14
SW-21/22/23 boards, CT-209 board Front plate assembly Slide plate assembly	601 -	Front panel assembly (1/2)	1-16
Front panel assembly Slide panel assembly VFD assembly	701 -	Front panel assembly (2/2)	1-18
Main chassis assembly Plug-in boards, Motherboard PA-218 board, EQ-72 board, RE-150 board	801 -	Main chassis and plug-in boards	1-20
Top plate assembly Bottom plate assembly PSW-72 board, HP-100 board DM-114/114P boards	901 -	Frame block	1-22
Rear panel assembly CP-344/344A/354 boards, DC-97 board	1001 -	Connector Panel	1-24
General screws and washers	-	Screws and Washers	1-26

Reel tables and gears

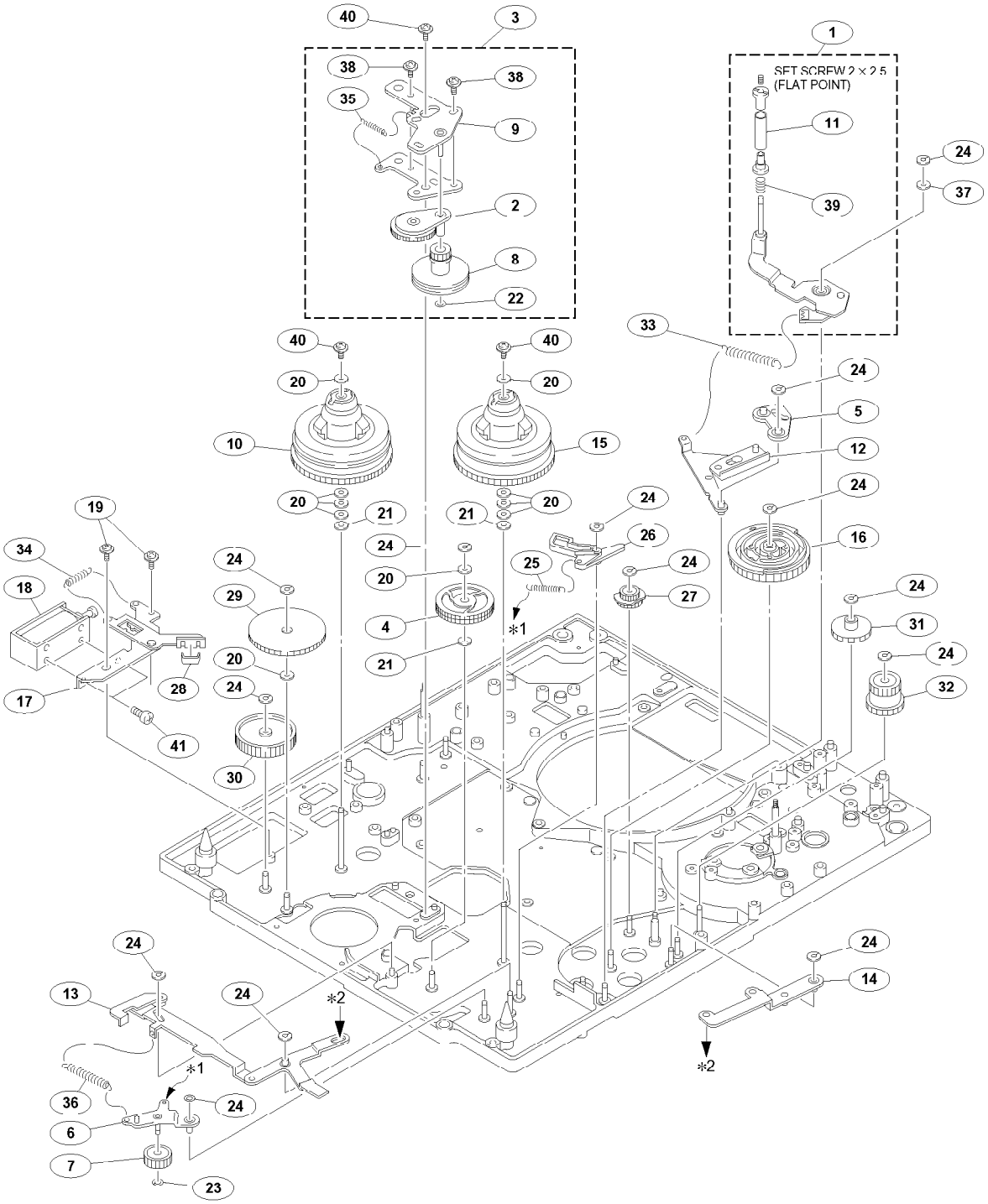

http://getMANUAL.com

No.	Part No.	SP	Description
1	A-8278-707-C	o	TENSION REGULATOR ASSY,T
2	A-8278-829-C	s	GEAR ASSY
3	A-8278-830-C	s	BASE ASSY,GEAR
4	A-8279-077-A	s	IDLER ASSY,T
5	X-3604-553-1	o	PLATE ASSY,BAND ADJUSTMENT
6	X-3604-570-1	o	ARM ASSY,GEAR,JOINT
7	X-3604-571-1	o	GEAR ASSY,JOINT
8	X-3604-587-2	s	PULLEY ASSY,RELAY
9	X-3604-588-2	o	SUBBASE ASSY
10	X-3604-599-2	s	TABLE ASSY,S REEL
11	X-3678-156-2	s	ROLLER (T) ASSY
12	X-3679-470-3	o	DRAWER ARM ASSY,T TENSION
13	X-3679-473-5	o	ASSY,LINK EJECT
14	X 3679 474 2	o	ARM ASSY,RELEASE
15	X-3679-500-4	s	TABLE ASSY,T REEL
16	X-3679-505-2	o	GEAR ASSY,CAM
17	X-3679-516-3	o	BRACKET,PLUNGER ASSY
18	1-454-334-51	s	SOLENOID,PLUNGER
19	2-640-315-01	o	SCREW(M2X5),SMALL
20	3-303-961-01	s	WASHER, POLY (t=0.13)
21	3-303-961-11	s	WASHER, POLY (t=0.25)
22	3-315-384-11	s	WASHER
23	3-315-384-21	s	WASHER,POLYETHYLENE
24	3-559-408-11	s	WASHER,POLYETHYLENE,DIA.1.2
25	3-561-626-00	s	SPRING, TENSION
26	3-611-414-02	o	BRAKE,T SOFT
27	3-611-468-03	o	GEAR,INTERMITTENT
28	3-611-473-01	s	SHOU,BREAKE
29	3-611-476-02	o	GEAR,MIDWAY(1)
30	3-611-477-03	o	GEAR,IDLE(2)
31	3-611-507-01	o	GEAR,MIDWAY
32	3-611-561-01	o	GEAR,JOINT
33	3-613-608-01	s	SPRING,EXTENSION
34	3-613-616-01	s	SPRING,EXTENSION
35	3-613-958-01	s	SPRING,EXTENSION
36	3-658-197-00	s	SPRING,TENSION
37	3-701-437-01	s	WASHER PLASTIC (2.1X0.14)
38	3-703-502-31	s	SCREW,M1.4X3
39	3-729-011-01	s	SPRING, COMPRESSION(COIL)
40	3-729-013-41	s	SCREW,WASHERHEAD(+P)
41	7-627-554-07	s	SCREW,PRECISION +P2X2.2

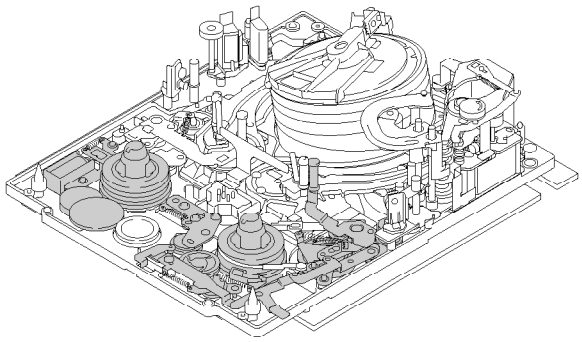

Threading link and AT head

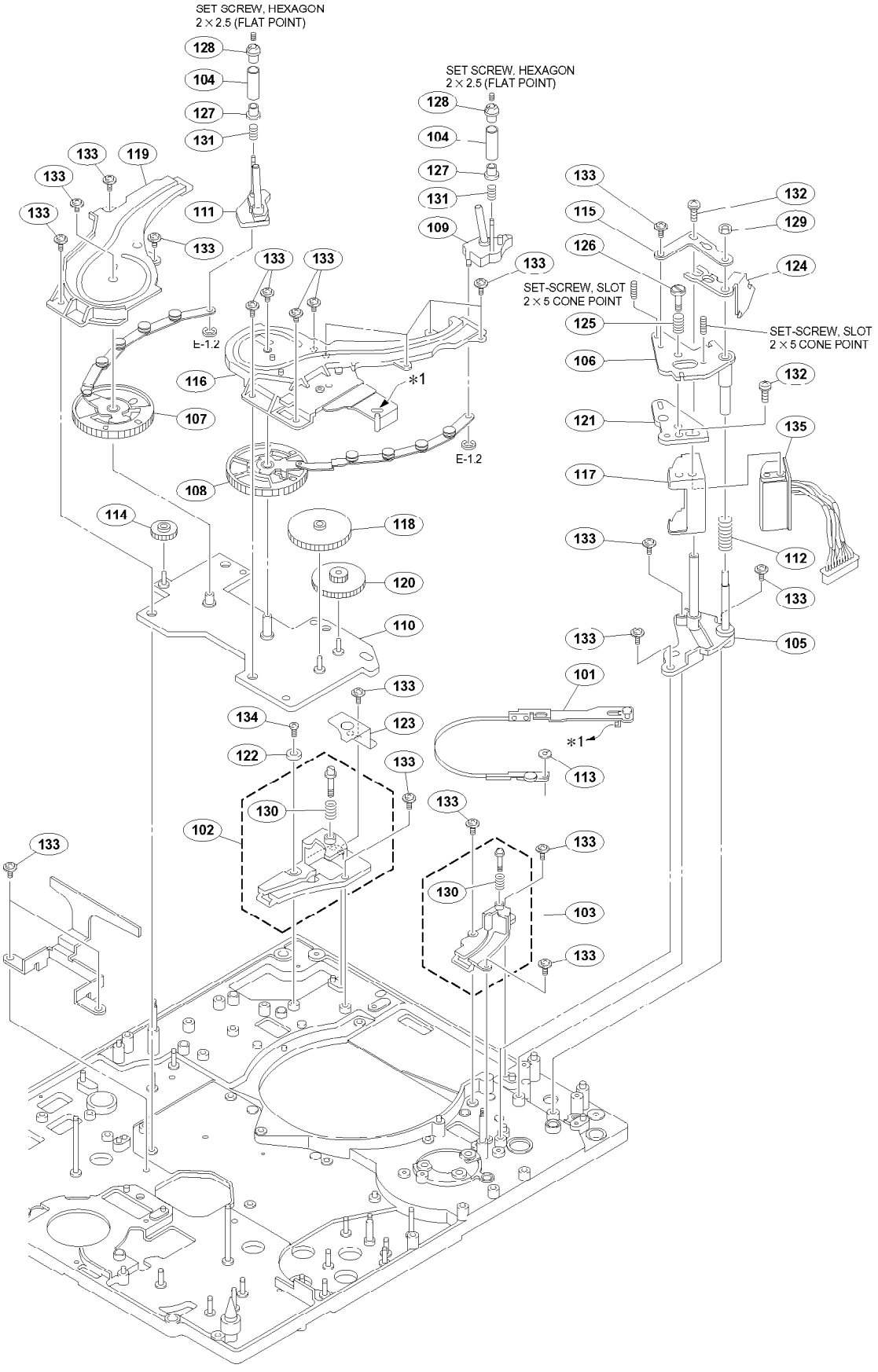

No.	Part No.	SP	Description
101	A-8278-704-D	s	BAND ASSY,TENSION REGULATOR
102	A-8278-705-E	o	CATCHER ASSY,S
103	A-8278-706-C	o	CATCHER ASSY,T
104	X-3678-091-3	s	COLLER ASSY
105	X-3679-491-1	o	BASE ASSY,A/T
106	X-3679-502-1	o	PLATE ASSY,A/T
107	X-3679-504-5	s	GEAR ASSY,THREADING S
108	X-3679-506-5	s	GEAR ASSY,THREADING T
109	X-3679-507-2	s	X ASSY,T SLIDER
110	X-3679-513-4	o	BASE,ASSY THGEAR
111	X-3679-514-3	s	X ASSY,S SLIDER
112	3-534-236-00	s	SPRING, COMPRESSION
113	3-559-408-11	s	WASHER,POLYETHYLENE,DIA.1.2
114	3-611-378-02	s	GEAR,S(S)
115	3-611-424-01	o	DAMPER,AT
116	3-611-485-04	o	RAIL T
117	3-611-536-02	o	CASE,SHIELD
118	3-611-545-01	s	GEAR
119	3-611-546-05	o	RAIL S
120	3-611-547-02	s	GEAR,DRIVING MIDWAY
121	3-611-566-01	o	PLATE,AT HEAD
122	3-612-803-01	o	SPACER (SUS)
123	3-613-689-01	o	CATCHER PLATE
124	3-615-789-01	o	CLAMP(A/T)
125	3-669-316-00	s	SPRING,COMPRESSION
126	3-680-223-01	s	SHAFT
127	3-682-273-01	s	FLANGE, LOWER, T2
128	3-682-274-01	s	FLANGE, UPPER, T2
129	3-698-829-01	s	NUT,NYLON
130	3-716-167-01	s	SPRING,COMPRESSION(COIL)
131	3-729-011-01	s	SPRING, COMPRESSION(COIL)
132	3-729-012-21	s	SCREW (M2X4)
133	3-729-013-41	s	SCREW,WASHERHEAD(+P)
134	7-627-551-77	s	SCREW, PRECISION +P1.4X4
135	8-825-920-02	s	HEAD, AUDIO (EPS244-2103J)

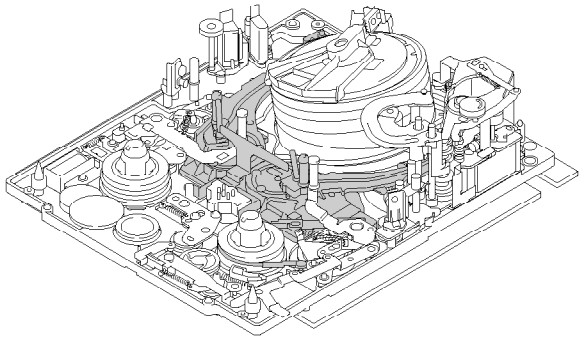

Drum and S-tension regulator

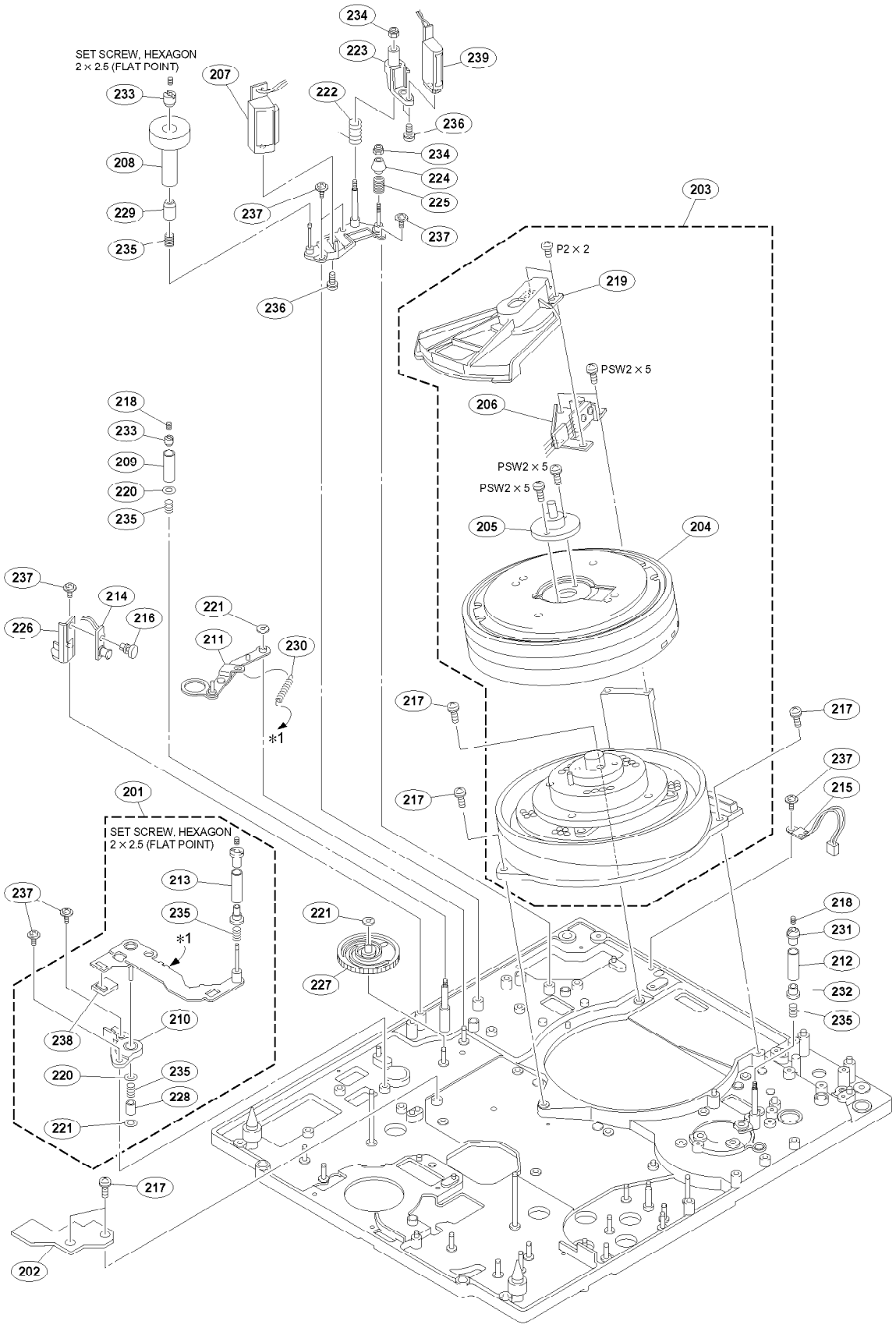

No.	Part No.	SP	Description
201	A-8278-718-C	o	S TENSION REGURATOR ASSY
202	A-8316-674-A	o	MOUNTED CIRCUIT BOARD, SR-65
203	A-8317-459-B	s	DJH-20AB-R
204	A-8317-461-B	s	DJR-20B-R(UPPER DRUM)
205	A-8317-463-A	s	RING ASSY (4CH (R/P)), SLIP
206	A-8317-464-A	s	BRUSH ASSY (4CH (R/P))
207	X-3167-316-2	s	HEAD (EF 291-21) ASSY
208	X-3604-660-1	s	ROLLER IMPEDANCE
209	X-3678-068-2	s	ROLLER ASSY,RESIN
210	X-3678-090-1	o	HOLDER ASSY,BEARING
211	X-3678-109-2	o	ARM ASSY,DRAWER
212	X-3678-129-2	s	ROLLER (2)ASSY,RESIN
213	X-3678-156-2	s	ROLLER (T) ASSY
214	1-543-316-21	s	HEAD,SENSING (SMALL TYPE)
215	1-810-599-11	s	SENSOR, DEW CONDENSATION
216	2-279-715-01	s	RIVET,NYLON
217	2-640-315-01	o	SCREW(M2X5),SMALL
218	2-990-477-01	s	SCREW (M2X2), HEXAGON SOCKET
219	3-203-006-02	o	COVER, DRUM
220	3-557-565-00	s	WASHER(1.4 DIA)
221	3-559-408-11	s	WASHER,POLYETHYLENE,DIA.1.2
222	3-603-615-02	s	SPRING,COIL,HEAD
223	3-603-664-01	o	ARM,CTL
224	3-603-672-01	o	SPACER TAPER
225	3-603-678-01	s	SPRING,COMPRESSION
226	3-611-469-05	o	HOLDER,SENSOR
227	3-611-475-01	o	GEAR,DRAWER ARM
228	3-611-665-01	o	SLEEVE
229	3-615-788-01	s	SPACER,IR
230	3-616-392-01	s	SPRING,EXTENSION
231	3-679-729-02	s	FLANGE,UPPER
232	3-680-230-01	s	FLANGE, LOWER
233	3-681-768-01	o	NUT,S3
234	3-698-829-01	s	NUT,NYLON
235	3-729-011-01	s	SPRING, COMPRESSION(COIL)
236	3-729-012-01	s	SCREW (M2X5)
237	3-729-013-41	s	SCREW,WASHERHEAD(+P)
238	3-967-714-01	s	MAGNET, ET (FERRITE)
239	8-825-779-72	s	CTL HEAD, PS244-21D

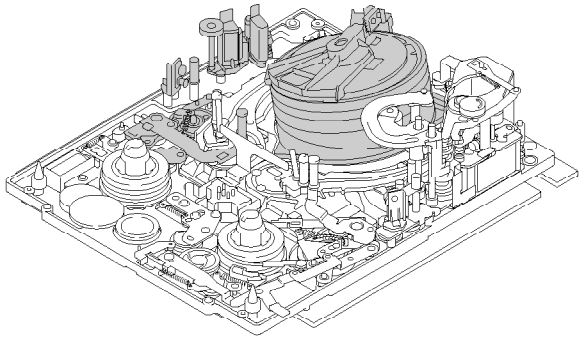

T-drawing block

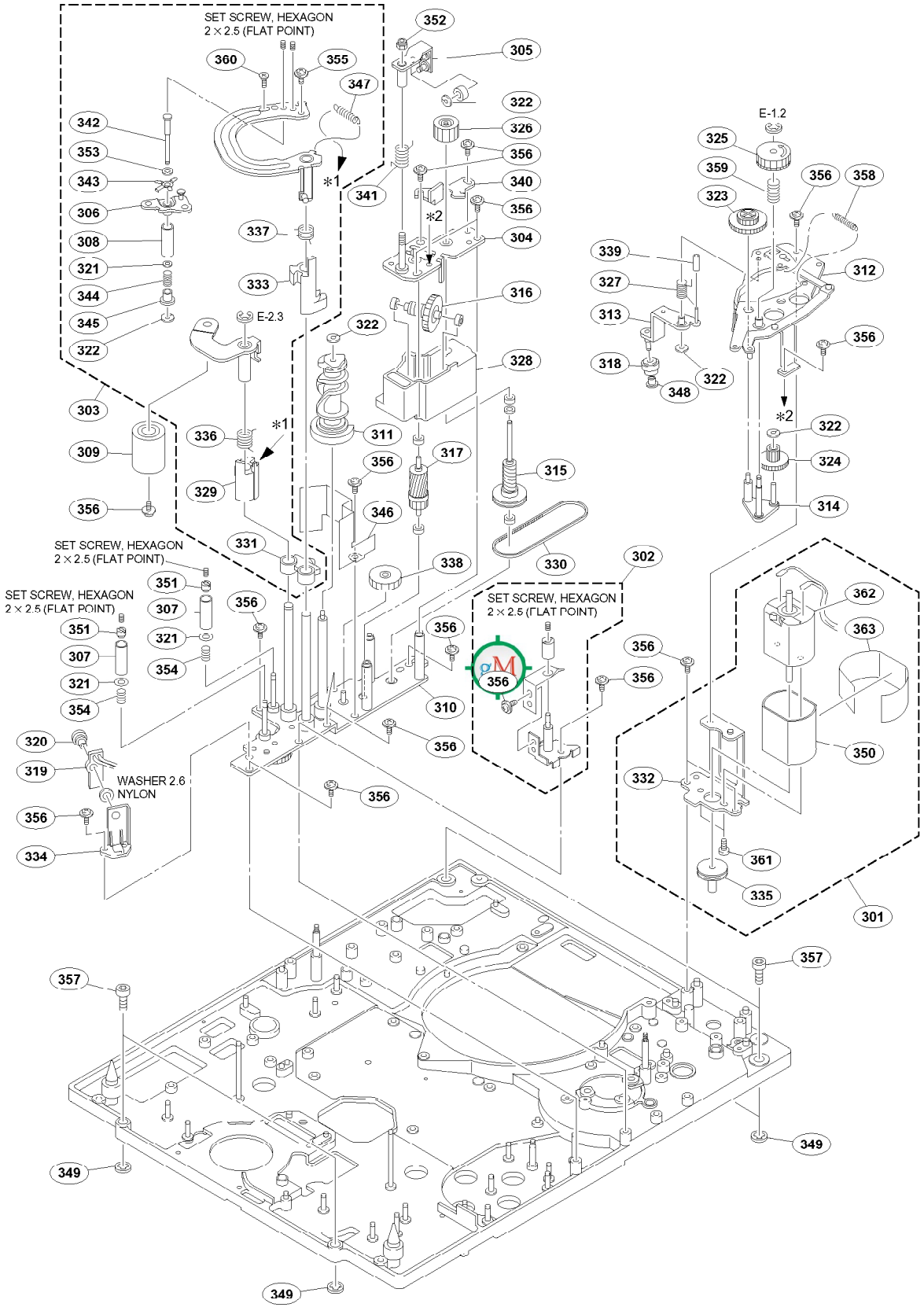

No.	Part No.	SP	Description
301	A-8278-701-C	s	MOTOR ASSY,LOADING
302	A-8278-799-C	o	LOCK ASSY,ARM(T)
303	A-8321-383-D	s	DRAWER SUB ASSY, T
304	X-3604-554-2	o	PLATE(2)ASSY
305	X-3604-555-3	o	PLATE,ADJUSTMENT
306	X-3604-557-2	o	PLATE ASSY,BASE T3
307	X-3678-068-2	s	ROLLER ASSY,RESIN
308	X-3678-091-3	s	COLLER ASSY
309	X-3678-926-1	s	PINCH ROLLER ASSY
310	X-3679-472-6	o	BASE ASSY,DRAWER
311	X-3679-478-3	s	CAM ASSY,PINCH PRESS
312	X-3679-485-5	o	BASE ASSY,VHC
313	X-3679-486-2	o	ARM ASSY,CR
314	X-3679-487-2	o	BASE ASSY,ME
315	X-3679-494-2	o	GEAR ASSY,GB(1)
316	X-3679-495-1	o	GEAR,ASSY GB(2)
317	X-3679-496-2	o	GEAR,ASSY GB(3)
318	X-3949-109-1	s	ROLLER ASSY,AHC
319	1-543-316-21	s	HEAD,SENSING (SMALL TYPE)
320	2-279-715-01	s	RIVET,NYLON
321	3-557-565-00	s	WASHER(1.4 DIA)
322	3-559-408-11	s	WASHER,POLYETHYLENE,DIA.1.2
323	3-611-362-01	o	GEAR B,ME
324	3-611-363-01	o	GEAR C,ME
325	3-611-370-02	o	GEAR DRIVE,ME
326	3-611-389-01	o	GEAR D,ME
327	3-611-390-01	o	SPRING ,CR ARM
328	3-611-398-04	o	HOUSING,GEAR BOX
329	3-611-401-06	o	LIMITER,PRESS PINCH
330	3-611-439-01	o	BELT,TIMING
331	3-611-445-03	o	CLAW,UP AND DOWN
332	3-611-453-02	o	BRACKET MOTOR
333	3-611-462-06	o	LIMITER,DRAWER T
334	3-611-469-05	o	HOLDER,SENSOR
335	3-611-492-01	s	PULLEY,LOADING MOTOR
336	3-611-510-01	s	SPRING,PINCH LIMITTER
337	3-611-529-02	s	SPRING,LIMITTER, T DRAWER
338	3-611-530-01	o	GEAR,GB(4)
339	3-611-657-01	o	ROLLER,LIMITER
340	3-612-775-01	o	STOPPER
341	3-612-778-01	s	SPRONG,TORSION
342	3-612-782-02	o	SHAFT,T3
343	3-612-783-01	o	SPRING(T3),LEAF
344	3-612-786-01	s	SPRING,COMPRESSION
345	3-612-787-03	s	FRANGE,T3
346	3-612-806-02	o	GUARD,TAPE
347	3-613-709-01	s	SPRING,EXTENSION
348	3-615-320-01	o	CAP,CR
349	3-669-465-01	s	WASHER(1.5), STOPPER
350	3-680-914-01	o	CASE,SHIELD
351	3-681-768-01	o	NUT,S3
352	3-698-829-01	s	NUT,NYLON
353	3-701-437-01	s	WASHER PLASTIC (2.1X0.14)
354	3-729-011-01	s	SPRING, COMPRESSION(COIL)
355	3-729-013-31	s	HEAD (+P1.4X3), WASHER
356	3-729-013-41	s	SCREW,WASHERHEAD(+P)
357	3-729-084-41	s	BOLT (M2X8), HEXAGON HOLE
358	4-631-374-01	s	SPRING, TENSION
359	4-945-386-01	s	SPRING,COMPRESSION
360	7-627-450-78	s	SCREW, PRECISION +K1.7X4
361	7-627-522-28	s	SCREW, PRECISION +P1.7X2
362	8-835-440-01	s	MOTOR(DN20-Q7Z1B) DC 10W UNDER
363	7-600-004-24	s	TAPE, ACETATE(No.5) 12X20M BLK (USED 10cm)

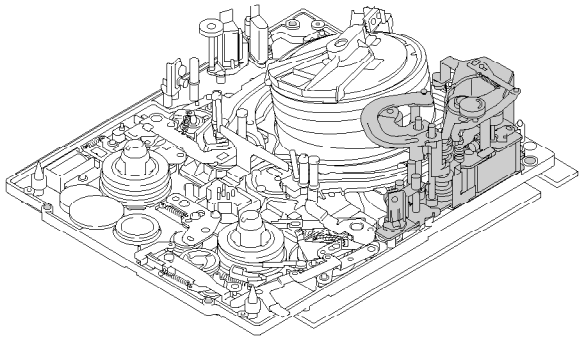

Bottom side of mechanical deck

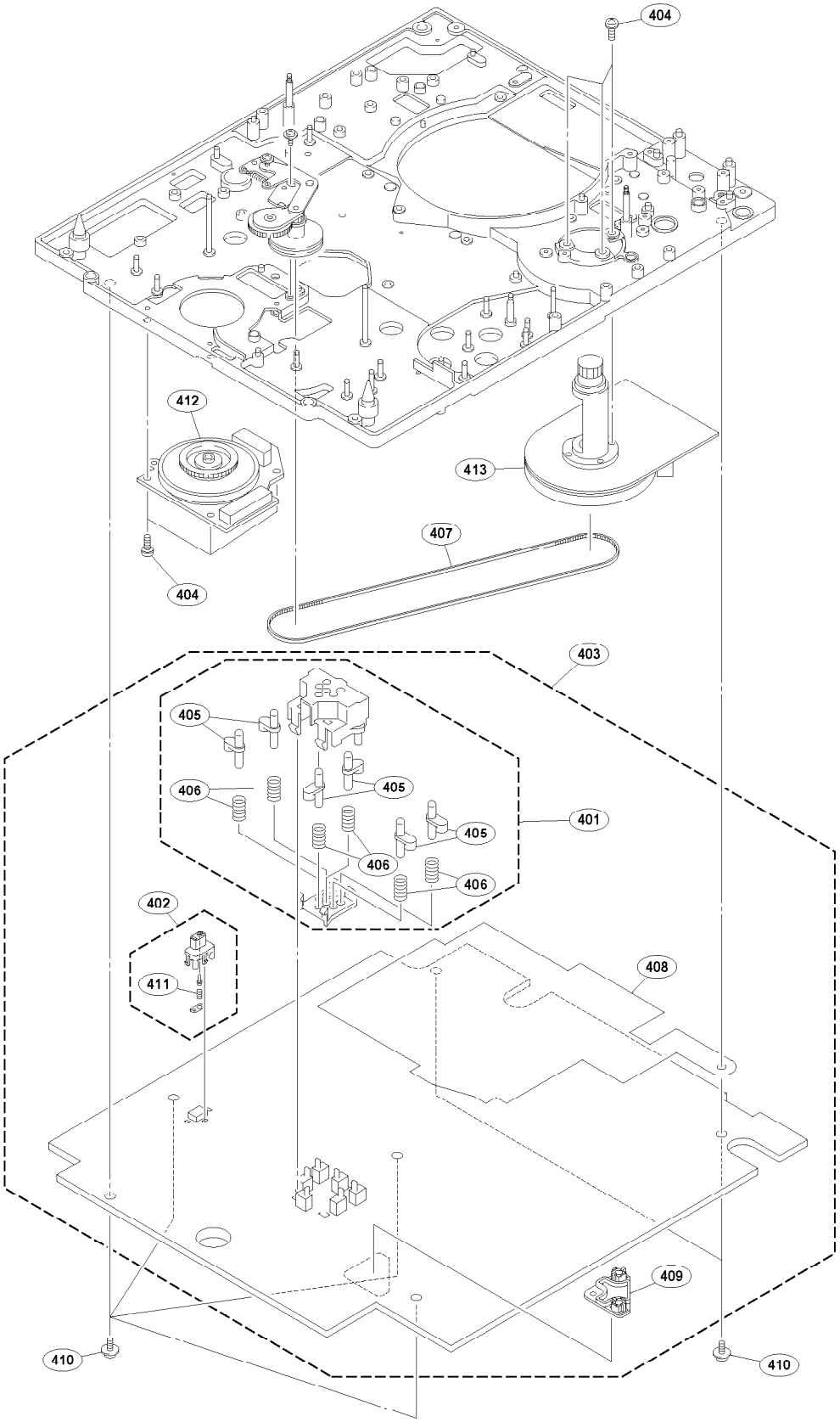

Bottom side of mechanical deck

No.	Part No.	SP	Description
401	A-8278-724-A	o	HOLDER ASSY SENSOR(TD)
402	A-8278-854-A	o	SWITCH ASSY,REC INHI
403	A-8323-004-A	o	MOUNTED CIRCUIT BOARD, SV-194A
404	2-640-315-01	o	SCREW(M2X5),SMALL
405	3-611-385-01	o	PIN,DETECTION
406	3-611-405-01	o	SPRING,COMPRESSION
407	3-611-544-01	s	BELT,TIMMING
408	3-612-505-02	o	SHEET,SV
409	3-612-820-03	o	HOLDER,SV SENSOR
410	3-729-013-41	s	SCREW,WASHERHEAD(+P)
411	4-963-480-01	s	SPRING(DOOR),COMPRESSION
412	8-835-589-01	s	MOTOR, DC SRV11A/J-N
413	8-835-590-01	s	MOTOR, DC SCV-0703A/J-N

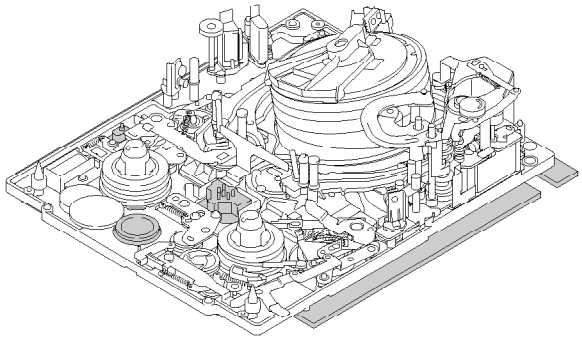

Cassette compartment

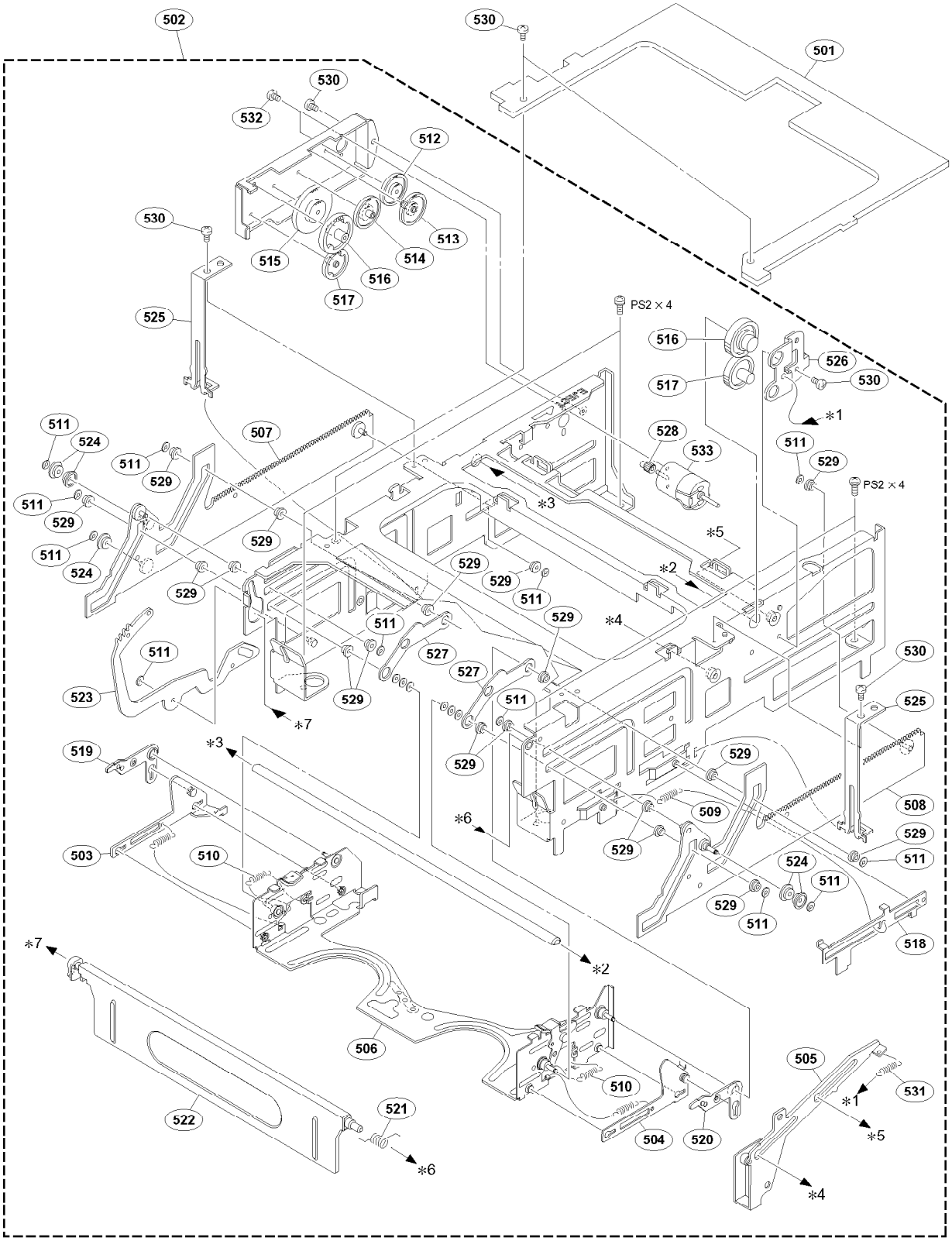

http://getMANUAL.com

No.	Part No.	SP	Description
501	A-8322-972-A	o	MOUNTED CIRCUIT BOARD, SE-529
502	A-8323-436-C	s	COMPARTMENT SUB ASSY, CASSETTE
503	X-3605-583-3	o	LEVER(L)ASSY,IN
504	X-3605-584-1	o	LEVER(R) ASSY,IN
505	X-3605-587-1	o	LID OPENER ASSY
506	X-3605-590-4	o	ASSY,HOLDER
507	X-3605-591-3	o	RACK ASSY,(L)
508	X-3605-592-3	o	RACK ASSY,(R)
509	3-307-378-00	s	SPRING,TENSION
510	3-319-686-01	s	SPRING,TENSION
511	3-559-408-11	s	WASHER,POLYETHYLENE,DIA.1.2
512	3-623-166-01	o	GEAR(1)
513	3-623-167-01	o	GEAR(2)
514	3 623 168 01	o	GEAR(3)
515	3-623-169-02	o	GEAR(4)
516	3-623-170-03	o	GEAR(5)
517	3-623-171-01	o	GEAR(6)
518	3-623-173-01	o	SHUTTER
519	3-623-176-03	o	PLATE,LIGHT INTERCEPTION(L)
520	3-623-177-03	o	PLATE,LIGHT INTERCEPTION(R)
521	3-623-191-02	s	SPRING,TORSION
522	3-623-195-02	o	DOOR
523	3-623-206-02	o	ARM,LIFT
524	3-623-207-02	o	ROLLER(B)
525	3-623-225-01	o	GUIDE,S SHASSIS
526	3-623-229-01	o	STOPPER
527	3-623-239-02	o	RETAINER,SHUTTER
528	3-679-748-01	s	PINION
529	3-680-032-11	o	ROLLER(A)
530	3-729-076-11	s	SCREW +B2X4
531	4-613-114-01	s	SPRING, TENSION
532	7-627-552-28	s	SCREW, PRECISION +P1.7X2
533	8-835-440-01	s	MOTOR(DN20-Q7Z1B) DC 10W UNDER

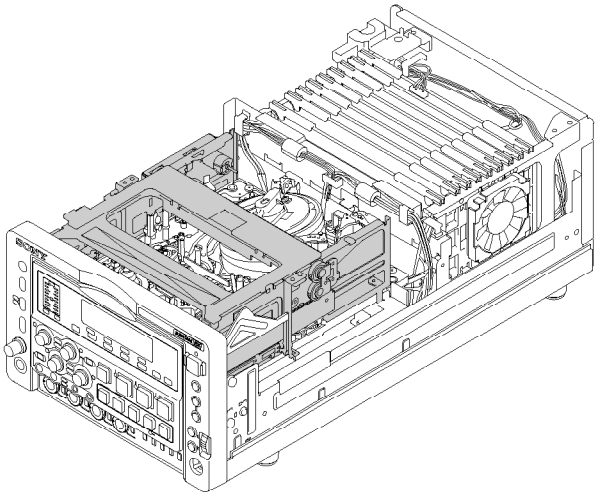

Front panel assembly (1/2)

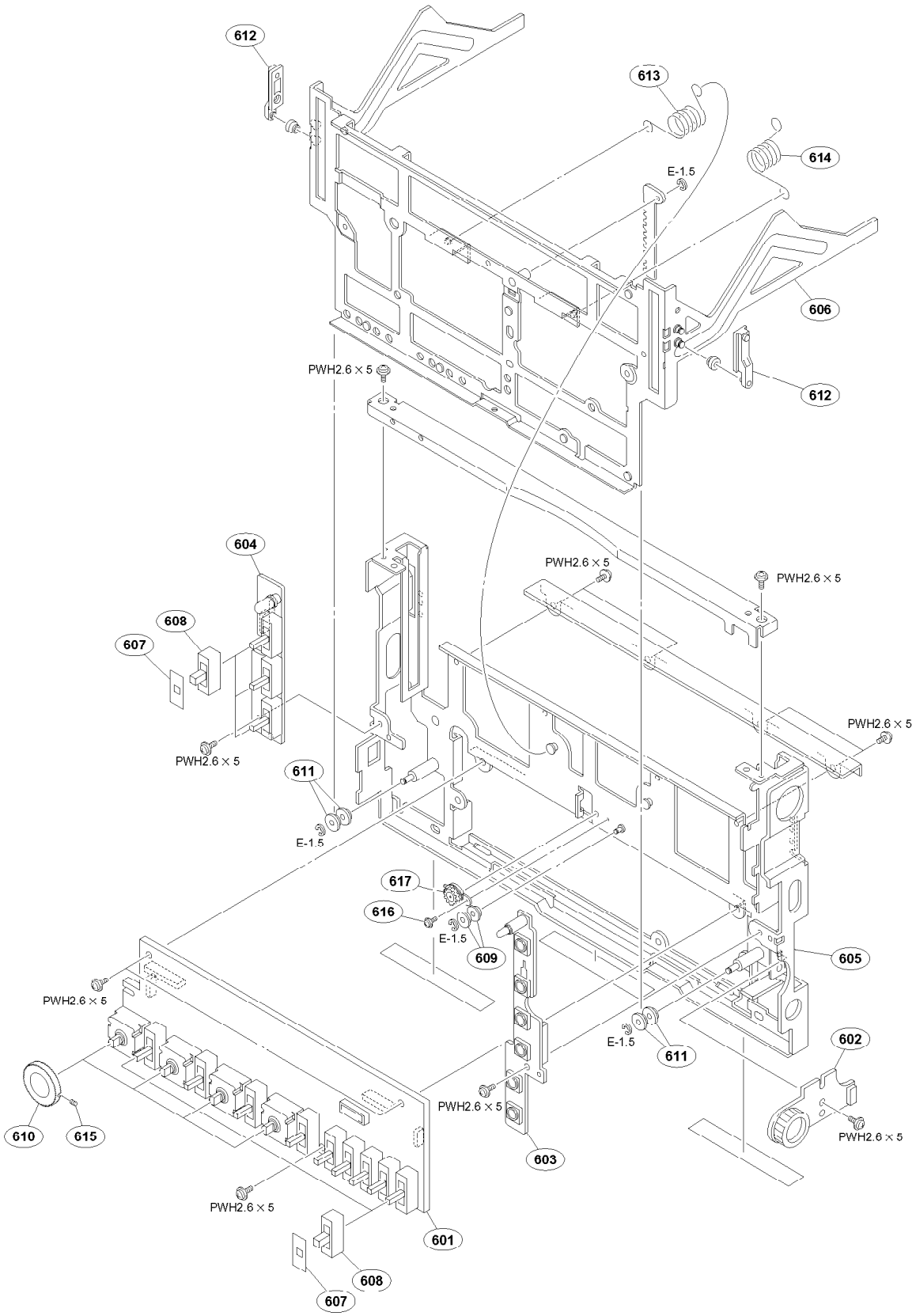

No.	Part No.	SP	Description
601	A-8322-899-A	o	MOUNTED CIRCUIT BOARD, SW-21
602	A-8322-969-A	o	MOUNTED CIRCUIT BOARD, CT-209
603	A-8322-973-A	o	MOUNTED CIRCUIT BOARD, SW-22
604	A-8322-974-A	o	MOUNTED CIRCUIT BOARD, SW-23
605	X-3605-598-3	o	PLATE ASSY,FRONT
606	X-3605-599-2	o	PLATE ASSY,SLIDE
607	2-124-654-01	o	SHEET,SWITCH
608	3-167-445-03	s	KNOB, SWITCH
609	3-169-471-01	s	ROLLER(B),C
610	3-611-740-01	o	KNOB(2),VR
611	3-623-243-01	o	GUIDE
612	3-623-347-01	o	ROLLER SLIDE2
613	3-623-348-01	o	SPRING,TORSION
614	3-623-349-01	o	SPRING,TORSION
615	3-623-696-01	s	SCREW,HEXAGON 2X3
616	3-729-013-41	s	SCREW,WASHERHEAD(+P)
617	3-953-235-31	s	DAMPER, OIL

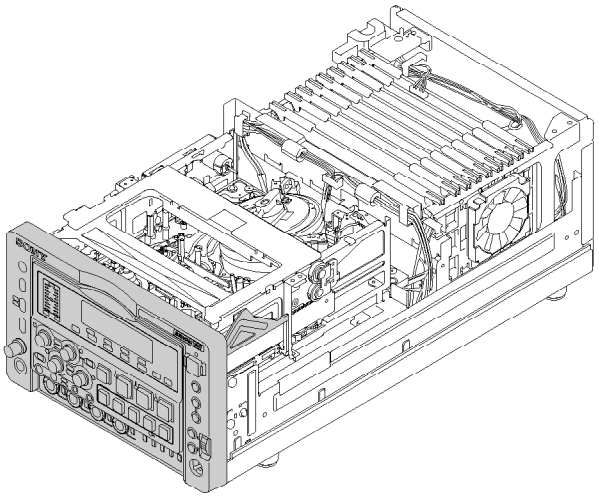

Front panel assembly (2/2)

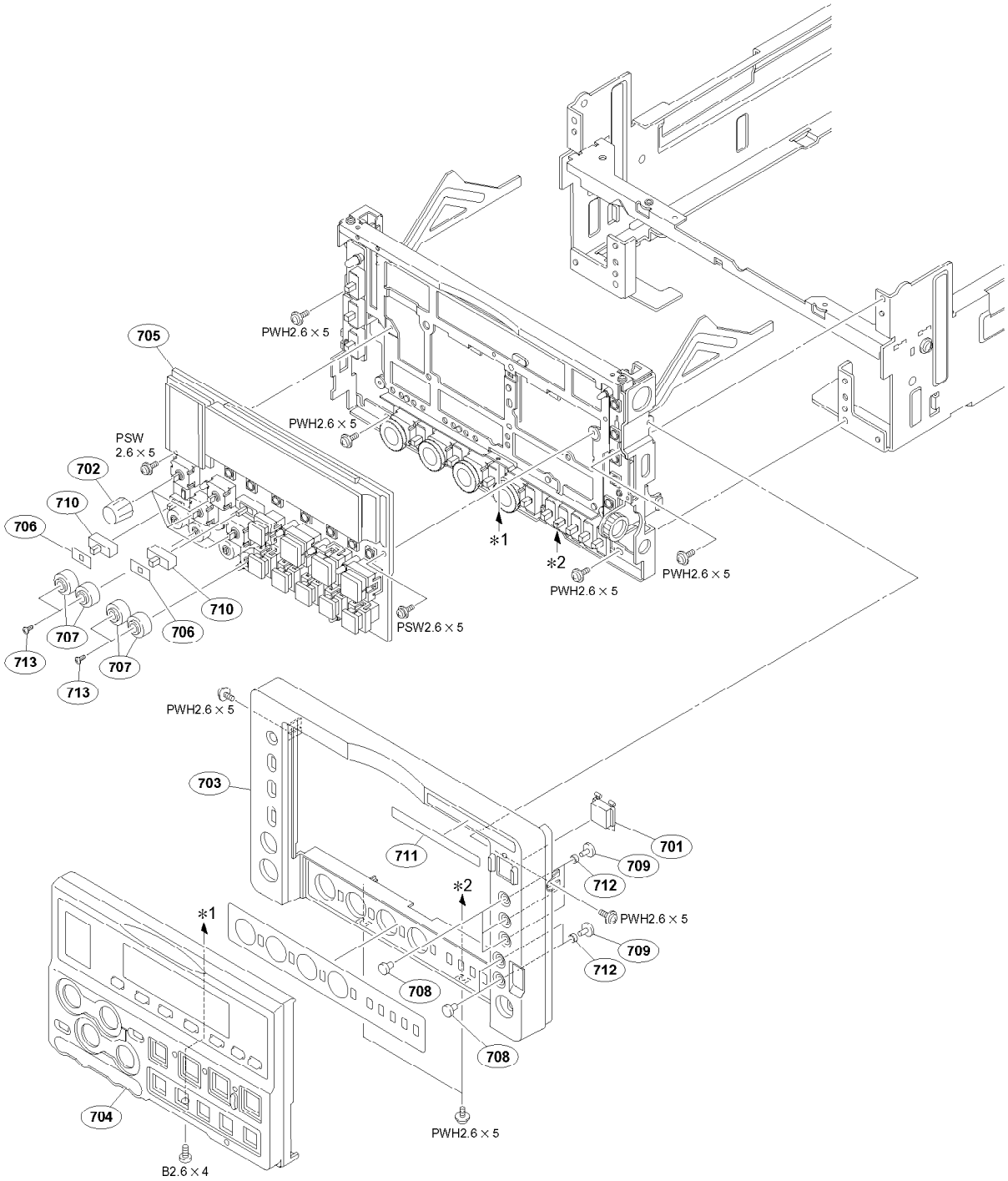

No.	Part No.	SP	Description
701	X-3166-137-1	o	BUTTON ASSY (EJECT)
702	X-3167-563-1	s	KNOB (DIA.3) ASSY, VOLUME
703	X-3605-585-2	o	FRONT PANEL (SUB) ASSY
704	X-3605-586-5	o	SLIDE,PANEL ASSY
705	1-803-786-11	s	VFD ASSY
706	2-124-654-01	o	SHEET,SWITCH
707	3-623-214-01	o	KNOB,SUB VR
708	3-623-216-01	s	SW,PUSH
709	3-623-217-01	s	SW,PUSH
710	3-623-220-01	s	KNOB SW
711	3-623-224-01	o	LABEL(A28) (for DNW-A28)
	3-623-233-01	o	LABEL(A28P) (for DNW-A28P)
712	3-686-086-01	s	CUSHION,BUTTON
713	3-704-244-41	s	SCREW,LOCKING +P1.7X3.0

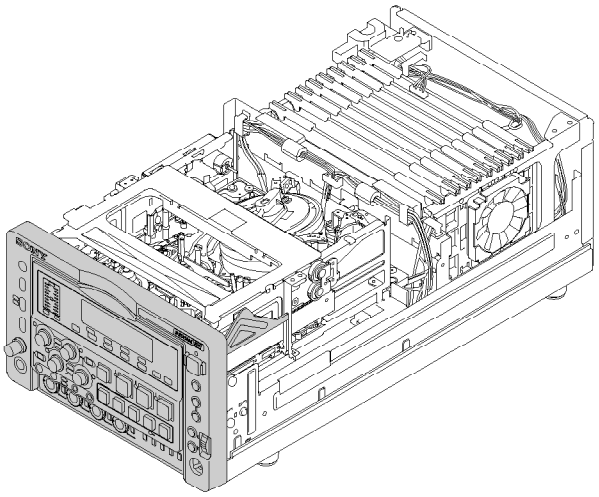

Main chassis and plug-in boards

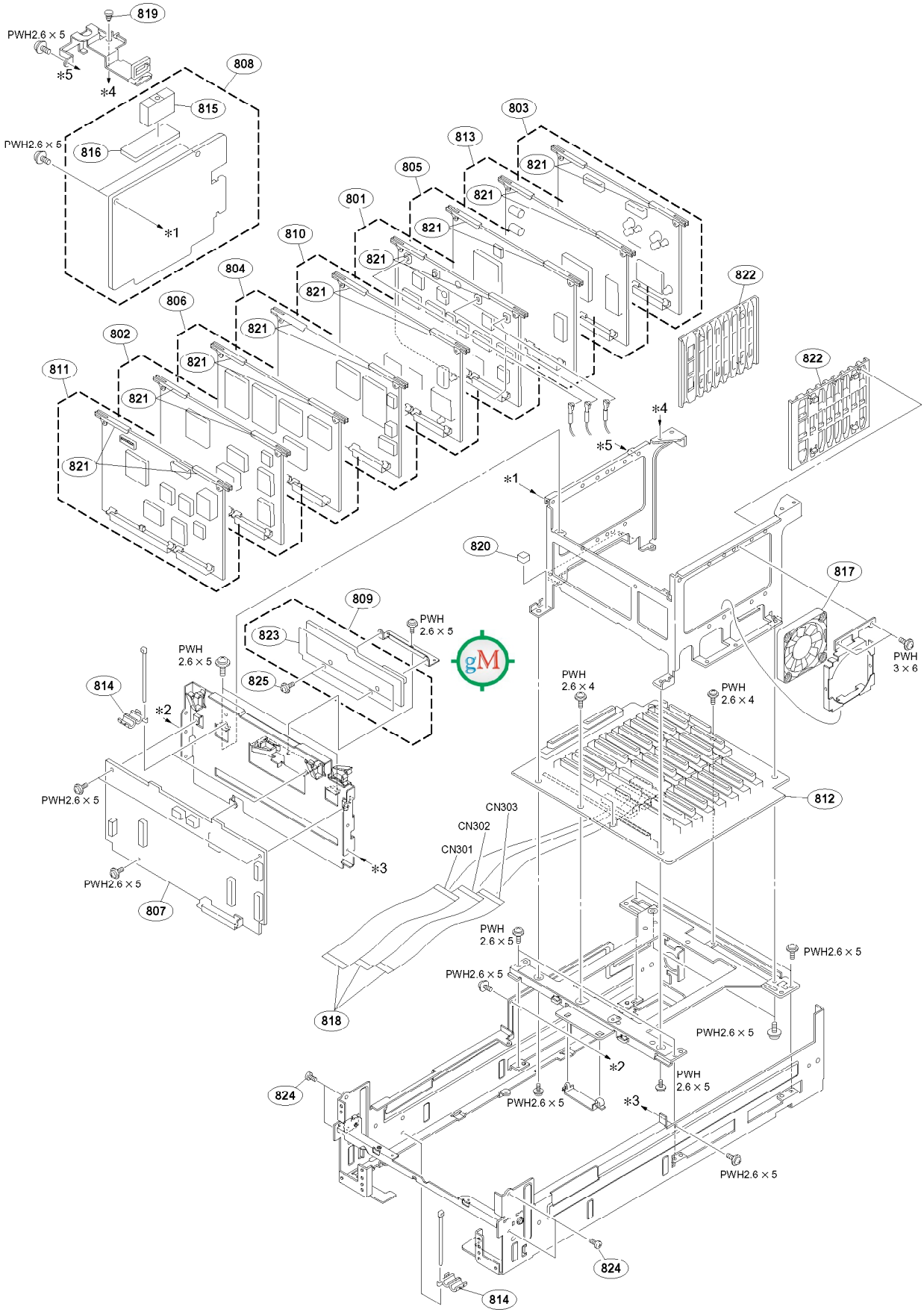

No.	Part No.	SP	Description
801	A-8316-672-A	s	MOUNTED CIRCUIT BOARD, SDT-23
802	A-8316-680-A	o	MOUNTED CIRCUIT BOARD, SY-260
803	A-8316-684-A	o	MOUNTED CIRCUIT BOARD, AU-249
804	A-8316-698-A	o	MOUNTED CIRCUIT BOARD, VPR-34
805	A-8316-704-A	o	MOUNTED CIRCUIT BOARD, DEC-97
806	A-8316-710-A	o	MOUNTED CIRCUIT BOARD, DPR-87
807	A-8316-722-A	o	MOUNTED CIRCUIT BOARD, EQ-72
808	A-8316-734-A	s	MOUNTED CIRCUIT BOARD, RE-150
809	A-8316-916-A	o	MOUNTED CIRCUIT BOARD, PA-218
810	A-8320-125-B	o	MOUNTED CIRCUIT BOARD, TG-191
811	A-8322-897-A	o	MOUNTED CIRCUIT BOARD, SY-259B
812	A-8323-005-A	o	MOUNTED CIRCUIT BOARD, MB-757A
813	A-8323-282-A	o	MOUNTED CIRCUIT BOARD, APR-27A
814	1-500-082-11	s	CLAMP, SLEEVE FERRITE
815	⚠ 1-533-647-11	s	BREAKER
816	1-667-541-11	o	PRINTED WIRING BOARD, RE-158
817	1-763-479-11	s	FAN, DC
818	1-777-371-11	o	WIRE, FLAT TYPE (30 CORE)
819	3-531-576-01	s	RIVET,NYLON
820	3-564-945-01	s	CUSHION (B)
821	3-603-737-01	o	LEVER,BOARD
822	3-611-508-02	o	RAIL,GUIDE,PC BOARD
823	3-613-301-01	o	INSULATING SHEET(PA-218)
824	3-725-295-11	s	SCREW (+)(B3)
825	3-729-013-41	s	SCREW,WASHERHEAD(+P)

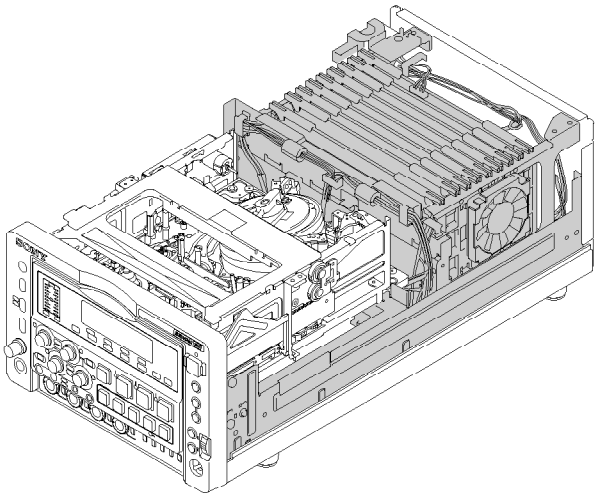

Frame block

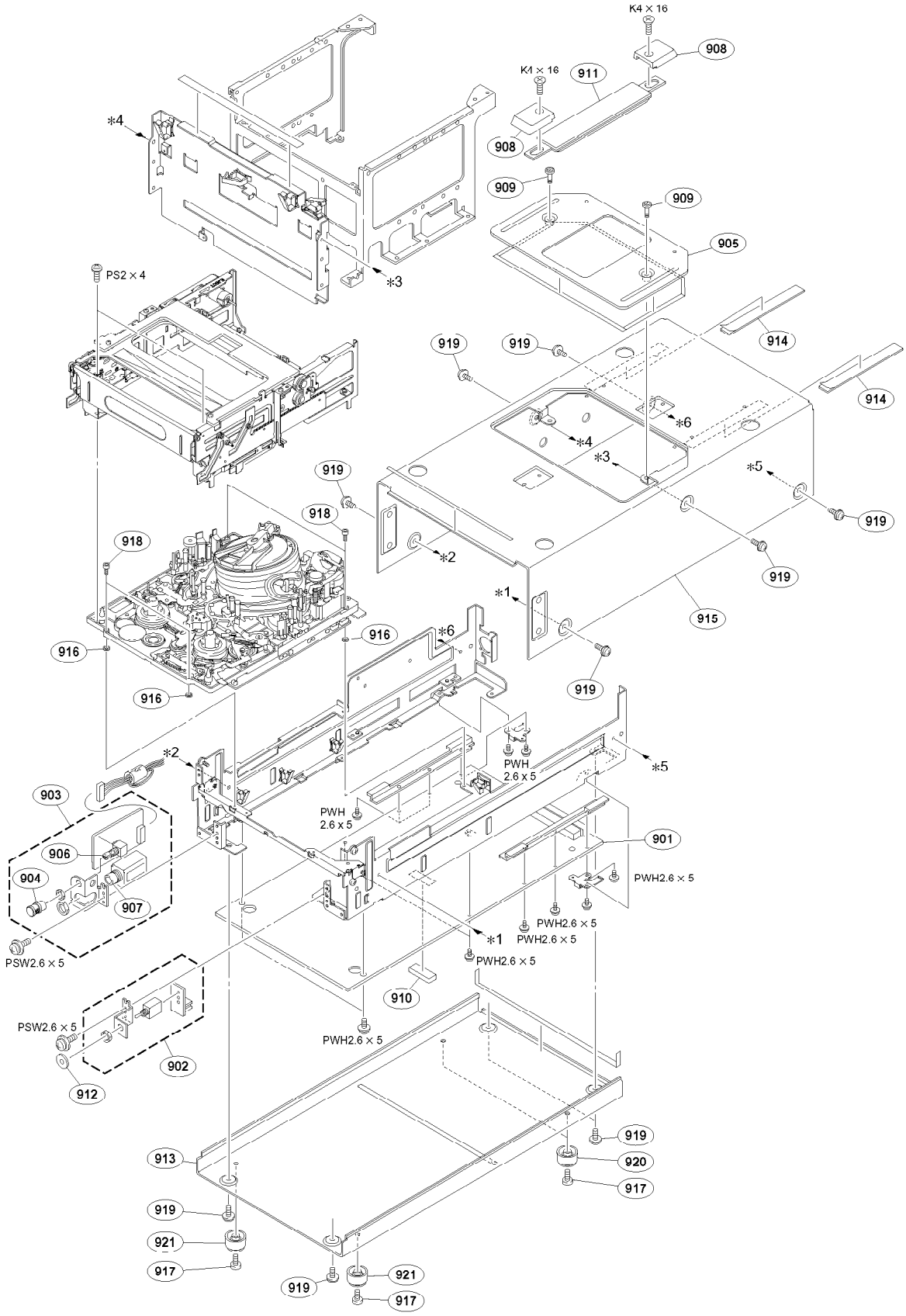

K4 × 16
908
K1 × 16
911
908
*4
909
909
905
PS2 × 4
*3
914
919
919
914
*6
*4
*3
*5
919
919
918
*2
919
918
*1
915
916
*6
916
919
916
*2
PWH
2.6 x 5
*5
903
PWH
2.6 x 5
901
906
904
PWH2.6 × 5
907
PWH2.6 × 5
*1
PWH2.6 × 5
PSW2.6 × 5
PWH2.6 × 5
910
PSW2.6 × 5
PWH2.6 × 5
902
912
919
913
920
917
919
921
917
921
919
917

No.	Part No.	SP	Description
901	A-8316-714-A	o	MOUNTED CIRCUIT BOARD, DM-114 (for DNW-A28)
	A-8316-716-A	o	MOUNTED CIRCUIT BOARD, DM-114P (for DNW-A28P)
902	A-8322-971-A	o	MOUNTED CIRCUIT BOARD, PSW-72
903	A-8323-002-A	o	MOUNTED CIRCUIT BOARD, HP-100
904	X-3167-825-1	o	KNOB ASSY (P), VOL
905	X-3605-589-2	o	PANEL(TOP) ASSY,SUB
906	1-241-577-11	s	RES,CARBON 20K/20K
907	1-565-326-12	s	JACK, LARGE TYPE (6.3MM)
908	2-253-306-00	o	TABLE,HANDLE
909	3-169-407-02	s	SCREW, LID
910	3-302-067-00	o	RETAINER,PRINTED CIRCUIT BOARD
911	3-419-372-41	s	HANDLE
912	3-603-742-01	o	DROP PROTECTION(LIGHT)
913	3-623-201-02	o	BOARD,BOTTOM
914	3-623-212-01	o	PETAINER,PWB
915	3-623-213-02	o	PLATE,TOP
916	3-669-465-01	s	WASHER(1.5), STOPPER
917	3-725-295-11	s	SCREW (+)(B3)
918	3-729-084-41	s	BOLT (M2X8), HEXAGON HOLE
919	4-031-617-22	s	SCREW, M3 CASE STOPPER
920	4-861-355-01	o	FOOT, M
921	4-861-356-01	o	FOOT, F

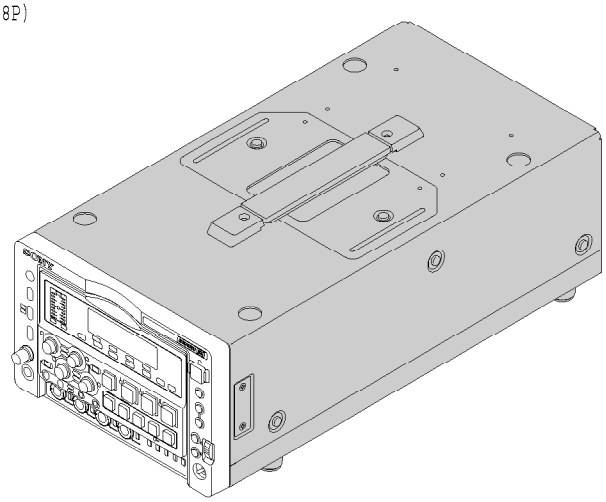

Connector panel

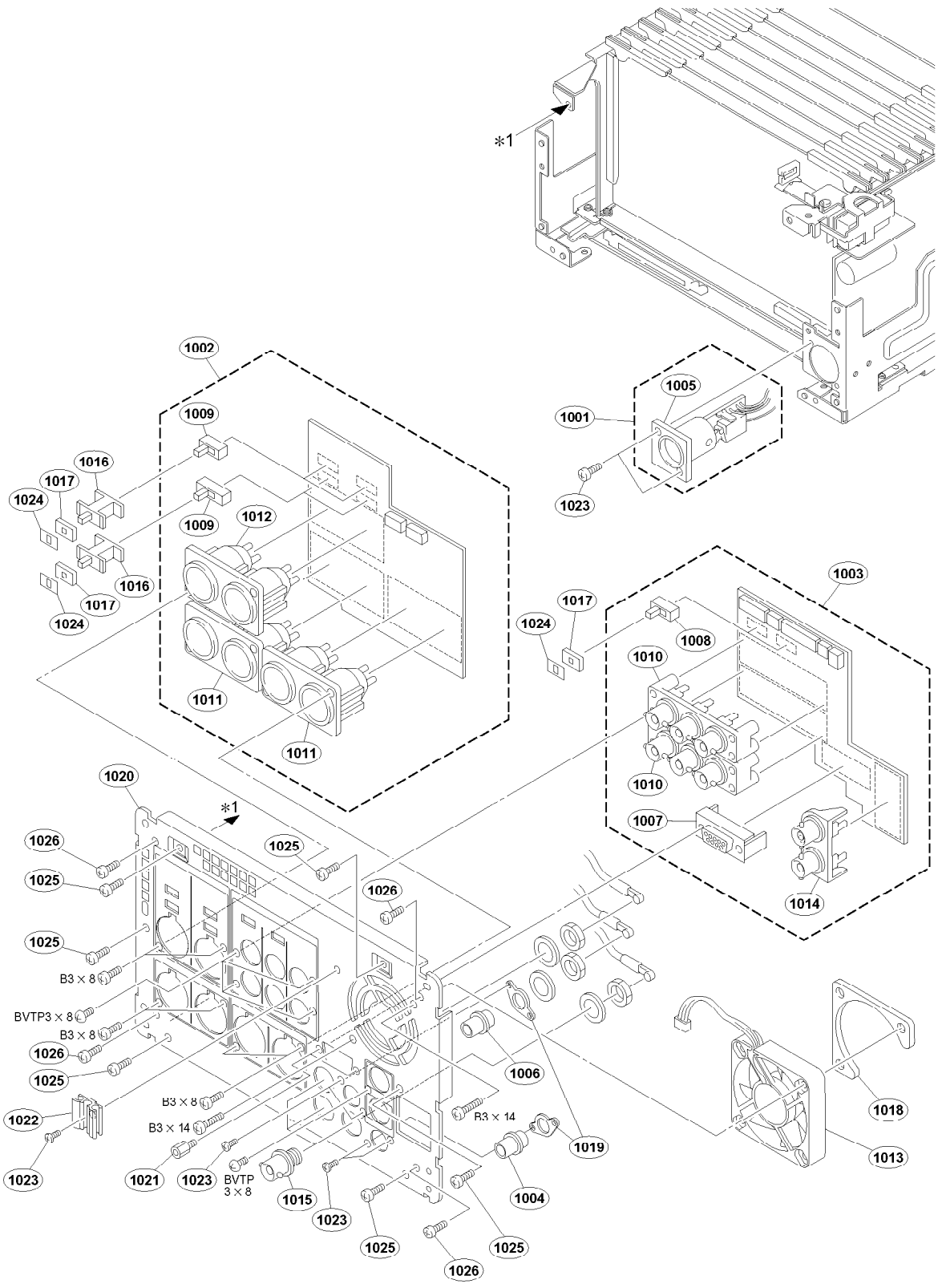

http://getMANUAL.com

No.	Part No.	SP	Description
1001	A-8318-279-B	o	MOUNTED CIRCUIT BOARD, DC-97
1002	A-8322-898-A	o	MOUNTED CIRCUIT BOARD, CP-344 (for SY)
	A-8323-001-A	o	MOUNTED CIRCUIT BOARD, CP-344A (for J)
1003	A-8323-195-A	o	MOUNTED CIRCUIT BOARD, CP-354
1004	1-561-233-21	s	RECEPTACLE,FEMALE;6P
1005	1-564-603-11	s	CONNECTOR(WITH DC SW) 4P
1006	1-565-072-11	s	CONNECTOR (RF),ROUND
1007	1-568-676-11	o	CONNECTOR, D-SUB 9P
1008	1-570-157-51	s	SWITCH,SLIDE (1-1-3)
1009	1-572-042-11	s	SWITCH,SLIDE (2-4-3)
1010	1-573-584-11	s	CONNECTOR, BNC (RECEPTACLE)
1011	1-750-785-21	s	CONNECTOR (XLR TYPE) 3P (for SY)
	1-750-786-21	s	CONNECTOR (XLR TYPE) 3P (for J)
1012	1 750 785 21	s	CONNECTOR (XLR TYPE) 3P (for J)
	1-750-786-21	s	CONNECTOR (XLR TYPE) 3P (for SY)
1013	1-763-041-11	s	FAN, DC (52 SQUARE)
1014	1-766-788-11	s	CONNECTOR, COAXIAL (BNC TYPE)
1015	1-784-240-11	s	CONVERTER, COAXIAL CONNECTOR
1016	3-171-450-01	o	ADAPTOR, SW
1017	3-173-384-01	o	SPACER, ORNAMENTAL PLATE
1018	3-611-543-01	o	PLATE,NUT
1019	3-611-666-02	o	HOLDER,CONNECTOR
1020	3-623-190-01	o	PANEL(SYM),REAR (for SY)
	3-623-252-01	o	PANEL(J),REAR (for J)
1021	3-673-910-31	s	SCREW, CONNECTOR
1022	3-679-659-03	o	CLAMP,CABLE
1023	3-694-181-01	s	AROCK PRECISION +P2.6 TYPE 1
1024	3-717-394-03	o	PLATE (SMALL), ORNAMENTAL, SW
1025	3-725-295-11	s	SCREW (+)(B3)
1026	3-742-074-11	s	SCREW (3)

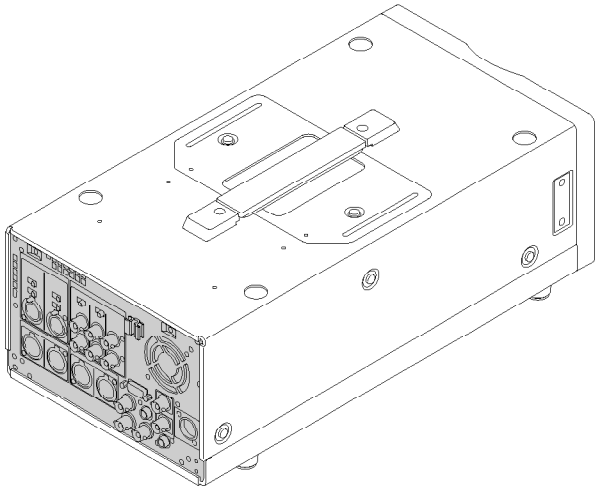

Screws and Washers

Part No.	SP	Description
7-621-710-48	s	SET SCREW(CONVEX) 2X5
7-621-731-08	s	SET-SCREW,HEX 2X2.5
7-621-759-35	s	SCREW +PSW 2.6X5
7-621-775-10	s	SCREW +B2.6X4
7-623-510-01	s	EARTH LUG 4
7-623-923-11	s	WASHER PLASTIC (2.6X0.3)
7-624-101-04	s	E RING (1.2)
7-624-102-04	s	RING,(E,1.5)
7-624-105-04	s	RING,E2.3
7-682-265-04	s	SCREW +K 4X16
7-682-547-04	s	SCREW +B3X6
7-682-551-09	s	SCREW +B3X14
7-682-558-04	s	SCREW +B4X4
7-682-902-11	s	SCREW +PWH 2.6X5
7-685-646-79	s	SCREW +BVTP 3X8

1-3. Electrical Parts List

1-3-1. Frame List

Ref. No. or Q'ty	Part No.	SP	Description
3pcs	1-500-082-11	s	CLAMP, SLEEVE FERRITE
FAN1	1-763-041-11	s	FAN, DC (52 SQUARE) "REAR"
FAN2	1-763-479-11	s	FAN, DC "SIDE"
FB1001	1-543-157-11	s	BEAD, FERRITE
H1	8-825-770-74	s	HEAD, FE EF291-21 "FULL ERASE HEAD"
H2	8-825-779-72	s	CTL HEAD,PS244-21D "CTL HEAD"
H3	8-825-920-02	s	HEAD, AUDIO EPS244-2103J "A/T HEAD"
M1	8-835-589-01	s	MOTOR, DC SRV11A/J-N "S-REEL MOTOR"
M2	8-835-440-01	s	MOTOR, DN20-Q7Z1B "THREADING MOTOR"
M3	8-835-590-01	s	MOTOR, DC SCV-0703A/J-N "CAPSTAN MOTOR"
M4	8-835-440-01	s	MOTOR DN20-Q7Z1B "CASSETTE COMPARTMENT MOTOR"
PM1	1-454-334-61	s	SOLENOID, PLUNGER
SE1	1-810-599-11	s	SENSOR, DEW CONDENSATION "DEW SENSOR"
SE2	1-543-316-22	s	HEAD, SENSING (SMALL TYPE) "TAPE TOP SENSOR"
SE3	1-543-316-22	s	HEAD, SENSING (SMALL TYPE) "TAPE END SENSOR"

1-3-2. Cable/Harness List

部品番号が記載されていないハーネスは，サービス部品として登録されていません。これらは，リストに展開されているコンポーネント部品で補修してください。

Harnesses with no part number are not registered as spare parts.
In need of repair, get components shown in the list and repair using them.

Ref. No. or Q'ty	Part No.	SP	Description
HN001	- - -		
(TO CN3/SW-22 BOARD			
1pc	1-565-979-11	o	HOUSING, CONNECTOR 8P
8pcs	1-565-977-11	s	TERMINAL, SOLDERLESS
(TO CN3/SW-21 BOARD)			
1pc	1-565-979-11	o	HOUSING, CONNECTOR 8P
8pcs	1-565-977-11	s	TERMINAL, SOLDERLESS
HN002	- - -		
(TO CN6/VFD ASSEMBLY)			
1pc	1-569-621-11	o	HOUSING, CONNECTOR 12P
12pcs	1-766-387-11	o	TERMINAL, SOLDERLESS 1P
(TO CN6/SW-21 BOARD)			
1pc	1-569-621-11	o	HOUSING, CONNECTOR 12P
12pcs	1-766-387-11	o	TERMINAL, SOLDERLESS 1P
HN003	- - -		
(TO CN4/SW-23 BOARD)			
1pcs	1-565-978-11	o	HOUSING, CONNECTOR 6P
6pcs	1-565-977-11	s	TERMINAL, SOLDERLESS
(TO CN4/SW-21 BOARD)			
1pcs	1-565-978-11	o	HOUSING, CONNECTOR 6P
6pcs	1-565-977-11	s	TERMINAL, SOLDERLESS
HN004	- - -		
(TO CN5/CT-209 BOARD)			
1pc	1-569-619-11	o	HOUSING, CONNECTOR 4P
4pcs	1-565-977-11	s	TERMINAL, SOLDERLESS
(TO CN5/SW-21 BOARD)			
1pc	1-569-619-11	o	HOUSING, CONNECTOR 4P
4pcs	1-565-977-11	s	TERMINAL, SOLDERLESS
HN005	- - -		
(TO CN1/DR-239 BOARD)			
1pc	1-580-585-11	o	HOUSING, CONNECTOR 18P
18pcs	1-580-599-11	o	TERMINAL, SOLDERLESS
(TO CN1/EQ-72 BOARD)			
1pc	1-569-621-11	o	HOUSING, CONNECTOR 12P
12pcs	1-565-977-11	s	TERMINAL, SOLDERLESS
(TO CN7/EQ-72 BOARD)			
1pc	1-565-978-11	o	HOUSING, CONNECTOR 6P
6pcs	1-565-977-11	s	TERMINAL, SOLDERLESS
HN006	1-958-196-15	o	HARNESS, SUB (SR66-EQ3)
(FROM CN1/SR-66 BOARD TO CN3/EQ-72 BOARD)			
HN007	1-958-201-15	o	HARNESS, SUB (SV801-EQ4)
(FROM CN4/EQ-72 BOARD TO CN801/SV-194A BOARD)			
HN008	- - -		
(TO CN3/DR-239 BOARD)			
1pc	1-565-979-11	o	HOUSING, CONNECTOR 8P
2pcs	1-565-977-11	s	TERMINAL, SOLDERLESS
6pcs	1-766-387-11	o	TERMINAL, SOLDERLESS 1P
(TO CN101/SV-194A BOOARD)			
1pc	1-565-979-11	o	HOUSING, CONNECTOR 8P
2pcs	1-565-977-11	s	TERMINAL, SOLDERLESS
6pcs	1-766-387-11	o	TERMINAL, SOLDERLESS 1P

Ref. No. or Q'ty	Part No.	SP	Description
HN009	- - -		
(TO CN100/SW 21 BOARD)			
1pc	1-778-549-11	o	HOUSING, CONNECTOR 20P
17pcs	1-778-554-21	o	TERMINAL, SOLDERLESS
(TO CN201/MB-757A BOARD)			
1pc	1-778-550-11	o	HOUSING, CONNECTOR 30P
17pcs	1-778-554-21	o	TERMINAL, SOLDERLESS
HN010	- - -		
(TO CN901/SV-194A BOARD)			
1pc	1-569-621-11	o	HOUSING, CONNECTOR 12P
12pcs	1-766-387-11	o	TERMINAL, SOLDERLESS 1P
(TO CN901/MB-757A BOARD)			
1pc	1-569-621-11	o	HOUSING, CONNECTOR 12P
12pcs	1-766-387-11	o	TERMINAL, SOLDERLESS 1P
HN011	- - -		
(FROM SENSOR DEW TO CN701/SV-194A BOARD)			
2pcs	1-565-977-11	s	TERMINAL, SOLDERLESS
1pc	1-569-617-11	o	HOUSING, CONNECTOR 2P
HN012	- - -		
(TO S-REEL MOTOR)			
1pc	1-695-214-11	o	HOUSING, CONNECTOR 15P
15pcs	1-695-215-11	o	TERMINAL, SOLDERLESS 1P
(TO CN304/SV-194A BOARD)			
1pc	1-695-214-11	o	HOUSING, CONNECTOR 15P
15pcs	1-695-215-11	o	TERMINAL, SOLDERLESS 1P
HN013	1-782-281-11	s	WIRE, FLAT TYPE (30 CORE)
(FROM CN301/SV-194A BOARD TO CN301/MB-757A BOARD)			
HN014	- - -		
(FROM THREADINC MOTOR TO CN304/SV 194A BOARD)			
1pc	1-569-617-11	o	HOUSING, CONNECTOR 2P
2pcs	1-565-977-11	s	TERMINAL, SOLDERLESS
HN015	- - -		
(FROM TAPE TOP SENSOR TO CN703/SV-194A BOARD)			
1pc	1-569-617-11	o	HOUSING, CONNECTOR 2P
2pcs	1-565-977-11	s	TERMINAL, SOLDERLESS
HN016	- - -		
(FROM TAPE END SENSOR TO CN704/SV-194A BOARD)			
1pc	1-569-617-11	o	HOUSING, CONNECTOR 2P
2pcs	1-565-977-11	s	TERMINAL, SOLDERLESS
HN017	1-953-435-11	o	HARNESS, SUB (CAP-HN14)
(FROM CAPSTAN MOTOR TO CN201/SV-194A BOARD)			
HN018	- - -		
(FROM FULL ERASE HEAD, CTL HEAD TO CN401/SV-194A BOARD)			
4pcs	1-565-977-11	s	TERMINAL, SOLDERLESS
1pc	1-569-619-11	o	HOUSING, CONNECTOR 4P
HN019	1-782-950-12	o	WIRE, FLAT TYPE (30 CORE)
(FROM CN302/SV-194A BOARD TO CN302/MB-757A BOARD)			
HN020	1-958-202-11	o	HARNESS, SUB (SV705-SR65)
(FROM CN1/SR-65 BOARD TO CN705/SV-194A BOARD)			
HN021	1-782-952-12	o	WIRE, FLAT TYPE (30 CORE)
(FROM CN303/SV-194A BOARD TO CN303/MB-757A BOARD)			
HN022	1-960-034-11	o	HARNESS, SUB (SV1-SE1)
(FROM CN1/SV-194A BOARD TO CN1/SE-529 BOARD)			
HN023	- - -		
(FROM H3, A/T HEAD TO CN601/SV-194A BOARD)			
1pc	1-569-620-11	o	HOUSING, CONNECTOR 5P
5pcs	1-565-977-11	s	TERMINAL, SOLDERLESS

Ref. No. or Q'ty	Part No.	SP	Description
HN024	- - -		
(FROM H3, A/T HEAD TO CN1/PA 218 BOARD)			
1pc	1-565-978-11	o	HOUSING, CONNECTOR 6P
6pcs	1-565-977-11	s	TERMINAL, SOLDERLESS
HN025	- - -		
(TO CN204/PA-218 BOARD)			
1pc	1-569-519-11	o	HOUSING, CONNECTOR 7P
5pcs	1-565-977-11	s	TERMINAL, SOLDERLESS
2pcs	1-766-387-11	o	TERMINAL, SOLDERLESS 1P
(TO CN204/MB-757A BOARD)			
1pc	1-569-519-11	o	HOUSING, CONNECTOR 7P
5pcs	1-565-977-11	s	TERMINAL, SOLDERLESS
2pcs	1-766-387-11	o	TERMINAL, SOLDERLESS 1P
HN026	- - -		
(FROM CN602/SV-194A BOARD)			
1pc	1-569-619-11	s	HOUSING, CONNECTOR 4P
4pcs	1-565-977-11	s	TERMINAL, SOLDERLESS
(TO CN602/PA-218 BOARD)			
1pc	1-569-619-11	s	HOUSING, CONNECTOR 4P
4pcs	1-565-977-11	s	TERMINAL, SOLDERLESS
HN027	- - -		
(TO CN1/AU-249 BOARD)			
1pc	1-565-978-11	o	HOUSING, CONNECTOR 6P
4pcs	1-565-977-11	s	TERMINAL, SOLDERLESS
2pcs	1-766-387-11	o	TERMINAL, SOLDERLESS 1P
(TO CN1/CP-344 BOARD)			
1pc	1-569-520-11	o	HOUSING, CONNECTOR 10P
4pcs	1-565-977-11	s	TERMINAL, SOLDERLESS
2pcs	1-766-387-11	o	TERMINAL, SOLDERLESS 1P
HN028	1 958 199 13	o	HARNESS, SUB (HP8 MB8)
(TO CN8/HP-100 BOARD)			
1pc	1-569-621-11	o	HOUSING, CONNECTOR 12P
12pcs	1-565-977-11	s	TERMINAL, SOLDERLESS
(TO CN8/MB-757A BOARD)			
1pc	1-569-621-11	o	HOUSING, CONNECTOR 12P
12pcs	1-565-977-11	s	TERMINAL, SOLDERLESS
HN029	1-958-203-11	o	HARNESS, SUB (CP600-MB600)
(FROM CN600/MB-757A TO CN600/CP-344 BOARD)			
HN030	- - -		
(TO CN601/MB-757A BOARD)			
1pc	1-569-621-11	o	HOUSING, CONNECTOR 12P
8pcs	1-565-977-11	s	TERMINAL, SOLDERLESS
4pcs	1-766-387-11	o	TERMINAL, SOLDERLESS 1P
(TO CN601/CP-344 BOARD)			
1pc	1-569-621-11	o	HOUSING, CONNECTOR 12P
8pcs	1-565-977-11	s	TERMINAL, SOLDERLESS
4pcs	1-766-387-11	o	TERMINAL, SOLDERLESS 1P
HN031	- - -		
(TO CN1/MB-757A BOARD)			
1pcs	1-565-977-11	o	HOUSING, CONNECTOR 2P
2pcs	1-569-617-11	s	TERMINAL, SOLDERLESS
(TO CN1/PSW-72 BOARD)			
1pcs	1-565-977-11	o	HOUSING, CONNECTOR 2P
2pcs	1-569-617-11	s	TERMINAL, SOLDERLESS
HN032	- - -		
(TO CN700/MB-757A BOARD)			
1pc	1-569-520-11	o	HOUSING, CONNECTOR 10P
10pcs	1-565-977-11	s	TERMINAL, SOLDERLESS
(TO CN700/CP-354 BOARD)			
1pc	1-569-520-11	o	HOUSING, CONNECTOR 10P
10pcs	1-565-977-11	s	TERMINAL, SOLDERLESS

Ref. No. or Q'ty	Part No.	SP	Description
HN033	1-958-198-12	o	HARNESS, SUB (CP701-MB701)
(FROM CN701/MB 757A TO CN701/CP 354 BOARD)			
HN034	1-958-193-14	o	HARNESS, SUB (CP702-MB702)
(FROM CN702/MB-757A TO CN702/CP-354 BOARD)			
HN035	- - -		
(FROM CN704/MB-757A BOARD)			
1pc	1-569-620-11	o	HOUSING, CONNECTOR 5P
5pcs	1-565-977-11	s	TERMINAL, SOLDERLESS
(TO CN100/AUX)			
1pc	1-561-233-21	s	CONNECTOR, CIRCULAR 6P, FEMALE
HN036	- - -		
(TO CN3/RE-150 BOARD)			
1pc	1-562-252-11	o	HOUSING, CONNECTOR 2P
2pcs	1-562-260-11	o	CONTACT, SOCKET
(TO CN1/CP-354 BOARD)			
1pc	1-562-252-11	o	HOUSING, CONNECTOR 2P
2pcs	1-562-260-11	o	CONTACT, SOCKET
HN037	- - -		
(FROM CN2/RE-150 TO DC-97 BOARD)			
1pc	1-580-696-11	o	HOUSING, CONNECTOR 9P
8pcs	1-562-260-11	o	CONTACT, SOCKET
HN038	- - -		
(TO CN4/SY-259B BOARD)			
1pc	1-565-978-11	o	HOUSING, CONNECTOR 6P
4pcs	1-565-977-11	s	TERMINAL, SOLDERLESS
(TO CN2/CP-344 BOARD)			
1pc	1-565-978-11	o	HOUSING, CONNECTOR 6P
4pcs	1-565-977-11	s	TERMINAL, SOLDERLESS
HN039	1-790-085-11	s	CABLE ASSEMBLY, COAXIAL
(FROM CN100/SY-259B BOARD TO CN1002/SDI IN)			
HN040	1-790-086-11	s	CABLE ASSEMBLY, COAXIAL
(FROM CN700/SY-259B BOARD TO CN1003/SDI OUT 1)			
HN041	1-790-087-11	s	CABLE ASSEMBLY, COAXIAL
(FROM CN701/SY-259B BOARD TO CN1004/SDI OUT 2)			
HN042	- - -		
(TO CN301/CP-354 BOARD)			
1pc	1-562-252-11	o	HOUSING, CONNECTOR 2P
2pcs	1-562-260-11	o	CONTACT, SOCKET
(TO CN1001/DC OUT 12V)			
1pc	1-565-072-11	s	CONNECTOR, CIRCULAR 4P, FEMALE
HN043	- - -		
(TO CN1/DM-114/114P BOARD)			
1pc	1-569-619-11	s	HOUSING, CONNECTOR 4P
4pcs	1-565-977-11	s	TERMINAL, SOLDERLESS
(TO CN102/EQ-72 BOARD)			
1pc	1-569-619-11	s	HOUSING, CONNECTOR 4P
4pcs	1-565-977-11	s	TERMINAL, SOLDERLESS
HN044	- - -		
(TO CN706/SV-194A BOARD)			
1pc	1-569-196-31	o	HOUSING, CONNECTOR 3P
3pcs	1-569-193-11	o	TERMINAL, SOLDERLESS
(TO PLUNGER)			
HN045	- - -		
(TO CN2/SE-529 BOARD)			
1pc	1-569-195-31	o	HOUSING, CONNECTOR 2P
2pcs	1-569-193-11	o	TERMINAL, SOLDERLESS
(TO CASSETTE COMPARTMENT MOTOR)			

Ref. No. or Q'ty	Part No.	SP	Description
HN046	- - -		
(TO CN3/CP 354 BOARD)			
1pc	1-569-196-31	o	HOUSING, CONNECTOR 3P
3pcs	1-569-193-11	o	TERMINAL, SOLDERLESS
(TO REAR FAN)			
HN047	- - -		
(TO CN4/CP-354 BOARD)			
1pc	1-569-196-31	o	HOUSING, CONNECTOR 3P
3pcs	1-569-193-11	o	TERMINAL, SOLDERLESS
(TO SIDE FAN)			

1-3-3. External Connectors List

Ref. No. or Q'ty	Part No.	SP	Description
AUDIO INPUT CH-1/CH-2			
	1-750-785-21	s	CONNECTOR DUAL XLR 3P, MALE (For J)
	1-750-786-21	s	CONNECTOR DUAL XLR 3P, FEMALE (For SY)
AUDIO OUTPUT 1/3 / 2/4			
	1-750-785-21	s	CONNECTOR DUAL XLR 3P, MALE (For SY)
	1-750-786-21	s	CONNECTOR DUAL XLR 3P, FEMALE (For J)
AUX			
	1-561-233-21	s	CONNECTOR, CIRCULAR 6P, FEMALE
DC IN			
	1-564-603-11	s	CONNECTOR WITH DC SW, 4P, MALE
DC OUT			
	1-565-072-11	s	CONNECTOR, CIRCULAR 4P, FEMALE
MONITOR OUTPUT R/L			
	1-750-785-21	s	CONNECTOR DUAL XLR 3P, MALE (For SY)
	1-750-786-21	s	CONNECTOR DUAL XLR 3P, FEMALE (For J)
REMOTE			
	1-568-676-11	o	CONNECTOR, D-SUB 9P, FEMALE
SDI IN			
	1-784-240-11	s	CONVERT CONNECTOR, COAXIAL
SDI OUT 1			
	1-784-240-11	s	CONVERT CONNECTOR, COAXIAL
SDI OUT 2			
	1-784-240-11	s	CONVERT CONNECTOR, COAXIAL
LTC IN/LTC OUT			
	1-766-788-11	s	CONNECTOR, 2-BNC, FEMALE
VIDEO REF.IN/VIDEO INPUT/VIDEO OUTPUT 1			
	1-573-584-11	s	CONNECTOR, 3-BNC, FEMALE
VIDEO REF.IN(THRU-OUT)/VIDEO INPUT(THRU-OUT)/ VIDEO OUTPUT 2(SUPER)			
	1-573-584-11	s	CONNECTOR, 3-BNC, FEMALE

1-3-4. Each Board

Index

Board	Page
APR-27A	1-31
AU-249	1-35
CP-344	1-41
CP-344A	1-43
CP-354	1-46
CT-209	1-47
DC-97	1-47
DEC-97	1-48
DM-114	1-52
DM-114P	1-74
DPR-87	1-95
EQ-72	1-98
HP-100	1-103
MB-757A	1-103
PA-218	1-104
PSW-72	1-105
RE-150	1-105
RE-158	1-110
SDI-23	1-111
SE-529	1-116
SR-65	1-117
SV-194A	1-118
SW-21	1-127
SW-22	1-129
SW-23	1-129
SY-259B	1-129
SY-260	1-133
TG-191	1-137
VFD ASSEMBLY	1-144
VPR-34	1-146

APR-27A BOARD

Ref. No. or Q'ty	Part No.	SP	Description
1pc	A-8323-282-A	o	MOUNTED CIRCUIT BOARD, APR-27A
2pcs	3-603-737-01	o	LEVER,BOARD
5pcs	3-729-061-01	s	SCREW (M2X4.5) (TYPE 1)(STEEL)
C101	1-164-227-11	s	CAPACITOR,CERAMIC 0.022MF/25V
C200	1-164-227-11	s	CAPACITOR,CERAMIC 0.022MF/25V
C201	1-164-227-11	s	CAPACITOR,CERAMIC 0.022MF/25V
C202	1-164-227-11	s	CAPACITOR,CERAMIC 0.022MF/25V
C203	1-164-227-11	s	CAPACITOR,CERAMIC 0.022MF/25V
C204	1-164-227-11	s	CAPACITOR,CERAMIC 0.022MF/25V
C205	1-164-227-11	s	CAPACITOR,CERAMIC 0.022MF/25V
C302	1-164-227-11	s	CAPACITOR,CERAMIC 0.022MF/25V
C303	1-164-227-11	s	CAPACITOR,CERAMIC 0.022MF/25V
C304	1-164-227-11	s	CAPACITOR,CERAMIC 0.022MF/25V
C305	1-164-227-11	s	CAPACITOR,CERAMIC 0.022MF/25V
C306	1-164-227-11	s	CAPACITOR,CERAMIC 0.022MF/25V
C307	1-164-227-11	s	CAPACITOR,CERAMIC 0.022MF/25V
C402	1-164-227-11	s	CAPACITOR,CERAMIC 0.022MF/25V
C403	1-164-227-11	s	CAPACITOR,CERAMIC 0.022MF/25V
C404	1-164-227-11	s	CAPACITOR,CERAMIC 0.022MF/25V
C405	1-164-227-11	s	CAPACITOR,CERAMIC 0.022MF/25V
C406	1-164-227-11	s	CAPACITOR,CERAMIC 0.022MF/25V
C407	1-164-227-11	s	CAPACITOR,CERAMIC 0.022MF/25V
C502	1-164-227-11	s	CAPACITOR,CERAMIC 0.022MF/25V
C503	1-164-227-11	s	CAPACITOR,CERAMIC 0.022MF/25V
C504	1-164-227-11	s	CAPACITOR,CERAMIC 0.022MF/25V
C505	1-164-227-11	s	CAPACITOR,CERAMIC 0.022MF/25V
C506	1 164 227 11	s	CAPACITOR,CERAMIC 0.022MF/25V
C507	1-164-227-11	s	CAPACITOR,CERAMIC 0.022MF/25V
C602	1-164-227-11	s	CAPACITOR,CERAMIC 0.022MF/25V
C603	1-164-227-11	s	CAPACITOR,CERAMIC 0.022MF/25V
C604	1-164-227-11	s	CAPACITOR,CERAMIC 0.022MF/25V
C605	1-164-227-11	s	CAPACITOR,CERAMIC 0.022MF/25V
C606	1-164-227-11	s	CAPACITOR,CERAMIC 0.022MF/25V
C607	1-164-227-11	s	CAPACITOR,CERAMIC 0.022MF/25V
C701	1-164-227-11	s	CAPACITOR,CERAMIC 0.022MF/25V
C702	1-164-227-11	s	CAPACITOR,CERAMIC 0.022MF/25V
C703	1-164-227-11	s	CAPACITOR,CERAMIC 0.022MF/25V
C704	1-164-227-11	s	CAPACITOR,CERAMIC 0.022MF/25V
C705	1-164-227-11	s	CAPACITOR,CERAMIC 0.022MF/25V
C706	1-164-227-11	s	CAPACITOR,CERAMIC 0.022MF/25V
C707	1-164-227-11	s	CAPACITOR,CERAMIC 0.022MF/25V
C708	1-164-227-11	s	CAPACITOR,CERAMIC 0.022MF/25V
C709	1-164-227-11	s	CAPACITOR,CERAMIC 0.022MF/25V
C710	1-164-227-11	s	CAPACITOR,CERAMIC 0.022MF/25V
C711	1-164-227-11	s	CAPACITOR,CERAMIC 0.022MF/25V
C712	1-164-227-11	s	CAPACITOR,CERAMIC 0.022MF/25V
C713	1-164-227-11	s	CAPACITOR,CERAMIC 0.022MF/25V
C714	1-164-227-11	s	CAPACITOR,CERAMIC 0.022MF/25V
C715	1-164-227-11	s	CAPACITOR,CERAMIC 0.022MF/25V
C716	1-164-227-11	s	CAPACITOR,CERAMIC 0.022MF/25V
C717	1-164-227-11	s	CAPACITOR,CERAMIC 0.022MF/25V
C801	1-162-927-11	s	CAPACITOR,CERAMIC 100PF/50V CH
C802	1-164-227-11	s	CAPACITOR,CERAMIC 0.022MF/25V
C803	1-164-227-11	s	CAPACITOR,CERAMIC 0.022MF/25V
C804	1-164-227-11	s	CAPACITOR,CERAMIC 0.022MF/25V
C805	1-164-227-11	s	CAPACITOR,CERAMIC 0.022MF/25V
C806	1-164-227-11	s	CAPACITOR,CERAMIC 0.022MF/25V
C807	1-164-227-11	s	CAPACITOR,CERAMIC 0.022MF/25V

(APR-27A BOARD)

Ref. No. or Q'ty	Part No.	SP	Description
C808	1-162-915-11	s	CAPACITOR,CERAMIC 10PF/50V CH
C809	1-164-227-11	s	CAPACITOR,CERAMIC 0.022MF/25V
C810	1-164-227-11	s	CAPACITOR,CERAMIC 0.022MF/25V
C900	1-164-227-11	s	CAPACITOR,CERAMIC 0.022MF/25V
C901	1-126-394-11	s	CAPACITOR ELECT 10MF/16V(CHIP)
C902	1-126-394-11	s	CAPACITOR ELECT 10MF/16V(CHIP)
C903	1-126-391-11	s	CAPACITOR ELECT 47MF/6.3V(105)
C904	1-126-391-11	s	CAPACITOR ELECT 47MF/6.3V(105)
C905	1-126-391-11	s	CAPACITOR ELECT 47MF/6.3V(105)
C906	1-126-396-11	s	CAPACITOR ELECT 47MF/16V(CHIP)
C907	1-126-395-11	s	CAPACITOR ELECT 22MF/16V(CHIP)
C908	1-107-826-11	s	CAPACITOR,CHIP CERAMIC 0.1MF
C909	1-107-826-11	s	CAPACITOR,CHIP CERAMIC 0.1MF
C910	1-107-686-11	s	CAPACITOR,CHIP ELECT 4.7MF/16V
C911	1-164-227-11	s	CAPACITOR,CERAMIC 0.022MF/25V
C912	1-164-315-11	s	CAPACITOR,CERAMIC 470PF/50V CH
C913	1-107-826-11	s	CAPACITOR,CHIP CERAMIC 0.1MF
C914	1-107-826-11	s	CAPACITOR,CHIP CERAMIC 0.1MF
C915	1-164-227-11	s	CAPACITOR,CERAMIC 0.022MF/25V
C916	1-117-229-11	s	CAPACITOR, (SMD) 10MF/10V
C917	1-107-826-11	s	CAPACITOR,CHIP CERAMIC 0.1MF
C918	1-107-826-11	s	CAPACITOR,CHIP CERAMIC 0.1MF
C919	1-113-577-11	s	CAPACITOR,ELECT 47MF/16V
C920	1-113-577-11	s	CAPACITOR,ELECT 47MF/16V
C921	1-107-686-11	s	CAPACITOR,CHIP ELECT 4.7MF/16V
C922	1-107-686-11	s	CAPACITOR,CHIP ELECT 4.7MF/16V
C923	1 107 826 11	s	CAPACITOR,CHIP CERAMIC 0.1MF
C924	1-107-826-11	s	CAPACITOR,CHIP CERAMIC 0.1MF
C925	1-107-826-11	s	CAPACITOR,CHIP CERAMIC 0.1MF
C926	1-107-826-11	s	CAPACITOR,CHIP CERAMIC 0.1MF
C928	1-107-826-11	s	CAPACITOR,CHIP CERAMIC 0.1MF
C929	1-162-964-11	s	CAPACITOR,CERAMIC 1000PF/50V B
C930	1-117-229-11	s	CAPACITOR, (SMD) 10MF/10V
C931	1-117-229-11	s	CAPACITOR, (SMD) 10MF/10V
C1301	1-115-419-11	s	CAPACITOR,CHIP CERAMIC3300PF
C1401	1-115-419-11	s	CAPACITOR,CHIP CERAMIC3300PF
C1501	1-115-419-11	s	CAPACITOR,CHIP CERAMIC3300PF
C1601	1-115-419-11	s	CAPACITOR,CHIP CERAMIC3300PF
CN82	1-695-453-11	s	CONNECTOR,BOARD TO BOARD 50P
D900	8-719-938-75	s	DIODE SB05-05CP (RECTI)
D901	8-719-938-75	s	DIODE SB05-05CP (RECTI)
D902	8-719-404-35	s	DIODE MA141WK
D903	8-719-157-36	s	DIODE RD6.8M-B
D904	8-719-404-35	s	DIODE MA141WK
D905	8-719-210-39	s	DIODE EC10QS04
D906	8-719-210-39	s	DIODE EC10QS04
IC101	8-759-524-28	s	IC TC74VHC245FT(EL)
IC200	8-759-524-04	s	IC TC74VHC125FT (EL)
IC201	8-759-391-30	s	IC 74LVX3245QSCX
IC202	8-759-391-30	s	IC 74LVX3245QSCX
IC203	8-759-082-58	s	IC TC7W08FU
IC301	8-759-440-23	s	IC DSPB56007FJ66
IC302	8-759-526-41	s	IC MSM514400DL-60SJDR1
IC401	8-759-440-23	s	IC DSPB56007FJ66
IC402	8-759-526-41	s	IC MSM514400DL-60SJDR1
IC501	8-759-440-23	s	IC DSPB56007FJ66
IC502	8-759-526-41	s	IC MSM514400DL-60SJDR1

(APR-27A BOARD)

Ref. No. or Q'ty	Part No.	SP	Description
IC601	8-759-440-23	s	IC DSPB56007FJ66
IC602	8-759-526-41	s	IC MSM514400DL-60SJDR1
IC701	8-759-524-28	s	IC TC74VHC245FT(EL)
IC702	8-759-524-04	s	IC TC74VHC125FT (EL)
IC703	8-759-177-76	s	IC CXD8811AQ
IC704	8-759-482-24	s	IC IDT71V016S20Y-TL
IC705	8-759-253-97	s	IC CXD8859AQ
IC706	8-759-447-77	s	IC TC7WH74FU (TR12R)
IC707	8-759-524-28	s	IC TC74VHC245FT(EL)
IC708	8-759-524-04	s	IC TC74VHC125FT (EL)
IC801	8-759-491-46	s	IC TC74VHCT04AFT (EL)
IC802	8-759-524-28	s	IC TC74VHC245FT(EL)
IC803	8-759-386-25	s	IC 74LCX245MTCX
IC804	8-759-524-28	s	IC TC74VHC245FT(EL)
IC805	8-759-524-07	s	IC TC74VHC138FT(EL)
IC806	8-752-381-56	s	IC CXD1095AR
IC807	8-752-381-56	s	IC CXD1095AR
IC808	8-759-491-51	s	IC TC74VHCT245AFT(EL)
IC809	8-759-524-50	s	IC TC74VHC541FT(EL)
IC900	8-729-044-32	s	TRANSISTOR SI9433DY-T1
IC901	8-759-542-91	s	IC S-80840ANUP-ED4-T2
IC902	8-729-025-23	s	TRANSISTOR SI9925DY-T1
IC903	8-759-260-57	s	IC TL1451ACPW-E05
IC904	8-759-058-62	s	IC TC7S08FU-TE85R
IC915	8-729-045-28	s	TRANSISTOR SI4532DY-T1
L901	1-409-579-11	s	COIL, CHOKE 8.2UH
L902	1 409 579 11	s	COIL, CHOKE 8.2UH
L903	1-409-579-11	s	COIL, CHOKE 8.2UH
L904	1-409-579-11	s	COIL, CHOKE 8.2UH
L906	1-409-722-11	s	COIL, CHOKE 220UH
L907	1-409-722-11	s	COIL, CHOKE 220UH
Q8	8-729-029-14	s	TRANSISTOR DTC144EUA-T106
Q9	8-729-029-14	s	TRANSISTOR DTC144EUA-T106
Q900	8-729-029-14	s	TRANSISTOR DTC144EUA-T106
Q901	8-729-118-56	s	FET 2SK852-X2
Q902	8-729-141-75	s	TRANSISTOR 2SD596DV345
Q903	8-729-028-73	s	TRANSISTOR DTA114EUA-T106
Q904	8-729-117-32	s	TRANSISTOR 2SC4177
Q905	8-729-117-32	s	TRANSISTOR 2SC4177
Q906	8-729-140-63	s	TRANSISTOR 2SA1611-M5M6
Q907	8-729-117-32	s	TRANSISTOR 2SC4177
Q908	8-729-140-63	s	TRANSISTOR 2SA1611-M5M6
Q909	8-729-028-91	s	TRANSISTOR DTA144EUA-T106
Q911	8-729-029-14	s	TRANSISTOR DTC144EUA-T106
Q912	8-729-029-14	s	TRANSISTOR DTC144EUA-T106
Q913	8-729-029-14	s	TRANSISTOR DTC144EUA-T106
Q914	8-729-028-91	s	TRANSISTOR DTA144EUA-T106
Q915	8-729-028-91	s	TRANSISTOR DTA144EUA-T106
Q916	8-729-029-14	s	TRANSISTOR DTC144EUA-T106
Q917	8-729-028-91	s	TRANSISTOR DTA144EUA-T106
Q918	8-729-029-14	s	TRANSISTOR DTC144EUA-T106
Q919	8-729-140-63	s	TRANSISTOR 2SA1611-M5M6
Q920	8-729-117-32	s	TRANSISTOR 2SC4177
Q921	8-729-029-14	s	TRANSISTOR DTC144EUA-T106
R17	1-218-732-11	s	RESISTOR,CHIP 47K 1/16W(1608)
R18	1-218-732-11	s	RESISTOR,CHIP 47K 1/16W(1608)
R200	1-218-740-11	s	RESISTOR,CHIP 100K 1/16W(1608)
R201	1-218-740-11	s	RESISTOR,CHIP 100K 1/16W(1608)

(APR-27A BOARD)

Ref. No. or Q'ty	Part No.	SP	Description
R202	1-218-740-11	s	RESISTOR,CHIP 100K 1/16W(1608)
R203	1-218-740-11	s	RESISTOR,CHIP 100K 1/16W(1608)
R204	1-218-740-11	s	RESISTOR,CHIP 100K 1/16W(1608)
R205	1-218-740-11	s	RESISTOR,CHIP 100K 1/16W(1608)
R206	1-216-864-11	s	RESISTOR,CHIP 0 1/16W (1608)
R207	1-216-864-11	s	RESISTOR,CHIP 0 1/16W (1608)
R210	1-218-740-11	s	RESISTOR,CHIP 100K 1/16W(1608)
R304	1-218-740-11	s	RESISTOR,CHIP 100K 1/16W(1608)
R305	1-218-740-11	s	RESISTOR,CHIP 100K 1/16W(1608)
R401	1-218-644-11	s	RESISTOR,METAL 10 1/16W
R402	1-218-644-11	s	RESISTOR,METAL 10 1/16W
R403	1-218-644-11	s	RESISTOR,METAL 10 1/16W
R404	1-218-740-11	s	RESISTOR,CHIP 100K 1/16W(1608)
R405	1-218-740-11	s	RESISTOR,CHIP 100K 1/16W(1608)
R501	1-218-644-11	s	RESISTOR,METAL 10 1/16W
R504	1-218-740-11	s	RESISTOR,CHIP 100K 1/16W(1608)
R505	1-218-740-11	s	RESISTOR,CHIP 100K 1/16W(1608)
R601	1-218-644-11	s	RESISTOR,METAL 10 1/16W
R602	1-218-644-11	s	RESISTOR,METAL 10 1/16W
R603	1-218-644-11	s	RESISTOR,METAL 10 1/16W
R604	1-218-740-11	s	RESISTOR,CHIP 100K 1/16W(1608)
R605	1-218-740-11	s	RESISTOR,CHIP 100K 1/16W(1608)
R700	1-218-668-11	s	RESISTOR,CHIP 100 1/16W (1608)
R701	1-218-740-11	s	RESISTOR,CHIP 100K 1/16W(1608)
R702	1-218-740-11	s	RESISTOR,CHIP 100K 1/16W(1608)
R703	1-218-740-11	s	RESISTOR,CHIP 100K 1/16W(1608)
R704	1 216 864 11	s	RESISTOR,CHIP 0 1/16W (1608)
R705	1-216-864-11	s	RESISTOR,CHIP 0 1/16W (1608)
R706	1-216-864-11	s	RESISTOR,CHIP 0 1/16W (1608)
R707	1-216-864-11	s	RESISTOR,CHIP 0 1/16W (1608)
R708	1-216-864-11	s	RESISTOR,CHIP 0 1/16W (1608)
R709	1-216-864-11	s	RESISTOR,CHIP 0 1/16W (1608)
R710	1-218-644-11	s	RESISTOR,METAL 10 1/16W
R711	1-218-644-11	s	RESISTOR,METAL 10 1/16W
R712	1-218-644-11	s	RESISTOR,METAL 10 1/16W
R713	1-218-644-11	s	RESISTOR,METAL 10 1/16W
R714	1-216-864-11	s	RESISTOR,CHIP 0 1/16W (1608)
R715	1-216-864-11	s	RESISTOR,CHIP 0 1/16W (1608)
R716	1-218-692-11	s	RESISTOR,CHIP 1.0K 1/16W(1608)
R717	1-218-692-11	s	RESISTOR,CHIP 1.0K 1/16W(1608)
R718	1-218-692-11	s	RESISTOR,CHIP 1.0K 1/16W(1608)
R719	1-218-692-11	s	RESISTOR,CHIP 1.0K 1/16W(1608)
R720	1-218-692-11	s	RESISTOR,CHIP 1.0K 1/16W(1608)
R721	1-218-716-11	s	RESISTOR,CHIP 10K 1/16W(1608)
R722	1-218-668-11	s	RESISTOR,CHIP 100 1/16W (1608)
R723	1-218-668-11	s	RESISTOR,CHIP 100 1/16W (1608)
R724	1-218-668-11	s	RESISTOR,CHIP 100 1/16W (1608)
R725	1-218-668-11	s	RESISTOR,CHIP 100 1/16W (1608)
R726	1-218-668-11	s	RESISTOR,CHIP 100 1/16W (1608)
R727	1-218-668-11	s	RESISTOR,CHIP 100 1/16W (1608)
R728	1-218-668-11	s	RESISTOR,CHIP 100 1/16W (1608)
R729	1-218-668-11	s	RESISTOR,CHIP 100 1/16W (1608)
R800	1-216-864-11	s	RESISTOR,CHIP 0 1/16W (1608)
R801	1-218-740-11	s	RESISTOR,CHIP 100K 1/16W(1608)
R802	1-218-668-11	s	RESISTOR,CHIP 100 1/16W (1608)
R803	1-218-740-11	s	RESISTOR,CHIP 100K 1/16W(1608)
R804	1-218-740-11	s	RESISTOR,CHIP 100K 1/16W(1608)
R900	1-216-864-11	s	RESISTOR,CHIP 0 1/16W (1608)
R901	1-218-740-11	s	RESISTOR,CHIP 100K 1/16W(1608)

(APR-27A BOARD)

Ref. No. or Q'ty	Part No.	SP	Description
R902	1-218-736-11	s	RESISTOR,CHIP 68K 1/16W(1608)
R904	1-218-744-11	s	RESISTOR,METAL 150K 1/16
R905	1-218-740-11	s	RESISTOR,CHIP 100K 1/16W(1608)
R907	1-218-708-11	s	RESISTOR,CHIP 4.7K 1/16W(1608)
R908	1-218-708-11	s	RESISTOR,CHIP 4.7K 1/16W(1608)
R909	1-218-708-11	s	RESISTOR,CHIP 4.7K 1/16W(1608)
R910	1-218-708-11	s	RESISTOR,CHIP 4.7K 1/16W(1608)
R911	1-218-720-11	s	RESISTOR,CHIP 15K 1/16W(1608)
R912	1-218-704-11	s	RESISTOR,CHIP 3.3K 1/16W(1608)
R913	1-218-704-11	s	RESISTOR,CHIP 3.3K 1/16W(1608)
R914	1-218-748-11	s	RESISTOR,CHIP 220K 1/16W(1608)
R915	1-218-748-11	s	RESISTOR,CHIP 220K 1/16W(1608)
R916	1-218-668-11	s	RESISTOR,CHIP 100 1/16W (1608)
R917	1-218-728-11	s	RESISTOR,METAL 33K 1/16W
R918	1-218-705-11	s	RESISTOR,CHIP 3.6K 1/16W(1608)
R919	1-218-703-11	s	RESISTOR,METAL 3.0K 1/16(1608)
R920	1-218-728-11	s	RESISTOR,METAL 33K 1/16W
R921	1-218-708-11	s	RESISTOR,CHIP 4.7K 1/16W(1608)
R922	1-218-708-11	s	RESISTOR,CHIP 4.7K 1/16W(1608)
R923	1-218-700-11	s	RESISTOR,CHIP 2.2K 1/16W(1608)
R924	1-218-708-11	s	RESISTOR,CHIP 4.7K 1/16W(1608)
R925	1-218-708-11	s	RESISTOR,CHIP 4.7K 1/16W(1608)
R926	1-218-660-91	s	RESISTOR CHIP 47 1/16W (1608)
R927	1-218-660-91	s	RESISTOR CHIP 47 1/16W (1608)
R928	1-218-716-11	s	RESISTOR,CHIP 10K 1/16W(1608)
R929	1-218-740-11	s	RESISTOR,CHIP 100K 1/16W(1608)
R932	1 218 732 11	s	RESISTOR,CHIP 47K 1/16W(1608)
R934	1-218-732-11	s	RESISTOR,CHIP 47K 1/16W(1608)
R935	1-218-752-11	s	RESISTOR,CHIP 330K 1/16W(1608)
R936	1-218-748-11	s	RESISTOR,CHIP 220K 1/16W(1608)
R937	1-218-744-11	s	RESISTOR,METAL 150K 1/16
R938	1-218-752-11	s	RESISTOR,CHIP 330K 1/16W(1608)
R939	1-218-732-11	s	RESISTOR,CHIP 47K 1/16W(1608)
R940	1-218-748-11	s	RESISTOR,CHIP 220K 1/16W(1608)
R942	1-218-732-11	s	RESISTOR,CHIP 47K 1/16W(1608)
R943	1-216-658-11	s	RESISTOR,CHIP 2.0K 1/10W(2012)
R944	1-218-716-11	s	RESISTOR,CHIP 10K 1/16W(1608)
R945	1-216-658-11	s	RESISTOR,CHIP 2.0K 1/10W(2012)
R946	1-216-682-11	s	RESISTOR,CHIP 20K 1/10W (2012)
R947	1-216-682-11	s	RESISTOR,CHIP 20K 1/10W (2012)
RB101	1-236-907-11	s	RESISTOR BLOCK 100K (1608)
RB102	1-236-907-11	s	RESISTOR BLOCK 100K (1608)
RB103	1-236-907-11	s	RESISTOR BLOCK 100K (1608)
RB201	1-236-907-11	s	RESISTOR BLOCK 100K (1608)
RB202	1-236-907-11	s	RESISTOR BLOCK 100K (1608)
RB203	1-236-907-11	s	RESISTOR BLOCK 100K (1608)
RB204	1-236-907-11	s	RESISTOR BLOCK 100K (1608)
RB301	1-239-389-11	s	NETWORK,RESISTOR 47K (1608)
RB302	1-236-907-11	s	RESISTOR BLOCK 100K (1608)
RB401	1-239-389-11	s	NETWORK,RESISTOR 47K (1608)
RB402	1-236-907-11	s	RESISTOR BLOCK 100K (1608)
RB501	1-239-389-11	s	NETWORK,RESISTOR 47K (1608)
RB502	1-236-907-11	s	RESISTOR BLOCK 100K (1608)
RB601	1-239-389-11	s	NETWORK,RESISTOR 47K (1608)
RB602	1-236-907-11	s	RESISTOR BLOCK 100K (1608)
RB701	1-236-907-11	s	RESISTOR BLOCK 100K (1608)
RB702	1-236-904-11	s	RESISTOR NETWORK 1K (1608)
RB801	1-236-907-11	s	RESISTOR BLOCK 100K (1608)
RB802	1-236-907-11	s	RESISTOR BLOCK 100K (1608)

(APR-27A BOARD)

Ref. No. or Q'ty	Part No.	SP	Description
RB803	1-236-907-11	s	RESISTOR BLOCK 100K (1608)
RB804	1-236-907-11	s	RESISTOR BLOCK 100K (1608)
RB805	1-236-907-11	s	RESISTOR BLOCK 100K (1608)
RB806	1-233-936-11	s	NETWORK RESISTOR 10 (1608)
RB807	1-233-936-11	s	NETWORK RESISTOR 10 (1608)
RB808	1-233-936-11	s	NETWORK RESISTOR 10 (1608)
RB809	1-233-936-11	s	NETWORK RESISTOR 10 (1608)
RB810	1-233-936-11	s	NETWORK RESISTOR 10 (1608)
RB811	1-233-936-11	s	NETWORK RESISTOR 10 (1608)
RB812	1-236-907-11	s	RESISTOR BLOCK 100K (1608)
RB813	1-236-907-11	s	RESISTOR BLOCK 100K (1608)
RB814	1-236-907-11	s	RESISTOR BLOCK 100K (1608)
RB815	1-236-907-11	s	RESISTOR BLOCK 100K (1608)
RB816	1-236-907-11	s	RESISTOR BLOCK 100K (1608)
RB817	1-236-907-11	s	RESISTOR BLOCK 100K (1608)
RB818	1-236-907-11	s	RESISTOR BLOCK 100K (1608)
RB819	1-236-907-11	s	RESISTOR BLOCK 100K (1608)
RB821	1-236-907-11	s	RESISTOR BLOCK 100K (1608)
RB822	1-236-907-11	s	RESISTOR BLOCK 100K (1608)
RB823	1-236-907-11	s	RESISTOR BLOCK 100K (1608)
RB824	1-236-907-11	s	RESISTOR BLOCK 100K (1608)
RB825	1-236-907-11	s	RESISTOR BLOCK 100K (1608)
RB826	1-236-907-11	s	RESISTOR BLOCK 100K (1608)
RB827	1-236-907-11	s	RESISTOR BLOCK 100K (1608)
RB828	1-239-286-11	s	RESISTOR,NETWORK 22K (1608)
RB829	1-239-286-11	s	RESISTOR,NETWORK 22K (1608)
RB830	1 239 412 11	s	NETWORK, RESISTOR 100 (1608)
RB831	1-239-412-11	s	NETWORK, RESISTOR 100 (1608)
RB832	1-239-286-11	s	RESISTOR,NETWORK 22K (1608)
RB833	1-239-286-11	s	RESISTOR,NETWORK 22K (1608)
RB834	1-239-412-11	s	NETWORK, RESISTOR 100 (1608)
RB835	1-239-412-11	s	NETWORK, RESISTOR 100 (1608)
RB900	1-239-412-11	s	NETWORK, RESISTOR 100 (1608)

http://getMANUAL.com

AU-249 BOARD

Ref. No. or Q'ty	Part No.	SP	Description
1pc	A-8316-684-A	o	MOUNTED CIRCUIT BOARD, AU-249
3pcs	3-729-061-01	s	SCREW (M2X4.5) (TYPE 1)(STEEL)
2pcs	3-603-737-01	o	LEVER,BOARD
C1	1-164-227-11	s	CAPACITOR,CERAMIC 0.022MF/25V
C2	1-164-227-11	s	CAPACITOR,CERAMIC 0.022MF/25V
C3	1-104-913-11	s	CAPACITOR,CHIP TANTAL 10MF/16V
C4	1-104-913-11	s	CAPACITOR,CHIP TANTAL 10MF/16V
C5	1-104-913-11	s	CAPACITOR,CHIP TANTAL 10MF/16V
C6	1-164-227-11	s	CAPACITOR,CERAMIC 0.022MF/25V
C7	1-164-227-11	s	CAPACITOR,CERAMIC 0.022MF/25V
C8	1-164-227-11	s	CAPACITOR,CERAMIC 0.022MF/25V
C9	1-164-227-11	s	CAPACITOR,CERAMIC 0.022MF/25V
C10	1-135-177-21	s	CAPACITOR TANTALUM 1MF/25V
C11	1-107-688-11	s	CAPACITOR TANTALUM 1.5MF/25V
C12	1-107-686-11	s	CAPACITOR,CHIP ELECT 4.7MF/16V
C13	1-104-913-11	s	CAPACITOR,CHIP TANTAL 10MF/16V
C14	1-104-913-11	s	CAPACITOR,CHIP TANTAL 10MF/16V
C15	1-104-913-11	s	CAPACITOR,CHIP TANTAL 10MF/16V
C16	1-107-826-11	s	CAPACITOR,CHIP CERAMIC 0.1MF
C17	1-107-826-11	s	CAPACITOR,CHIP CERAMIC 0.1MF
C18	1-107-826-11	s	CAPACITOR,CHIP CERAMIC 0.1MF
C19	1-107-826-11	s	CAPACITOR,CHIP CERAMIC 0.1MF
C20	1-104-913-11	s	CAPACITOR,CHIP TANTAL 10MF/16V
C21	1-104-913-11	s	CAPACITOR,CHIP TANTAL 10MF/16V
C22	1-104-913-11	s	CAPACITOR,CHIP TANTAL 10MF/16V
C23	1-104-913-11	s	CAPACITOR,CHIP TANTAL 10MF/16V
C24	1-162-970-11	s	CAPACITOR CERAMIC 0.01MF/25V B
C101	1-162-927-11	s	CAPACITOR,CERAMIC 100PF/50V CH
C102	1-162-927-11	s	CAPACITOR,CERAMIC 100PF/50V CH
C103	1-126-396-11	s	CAPACITOR ELECT 47MF/16V(CHIP)
C104	1-162-921-11	s	CAPACITOR,CERAMIC 33PF/50V CH
C105	1-126-394-11	s	CAPACITOR ELECT 10MF/16V(CHIP)
C106	1-162-923-11	s	CAPACITOR,CERAMIC 47PF/50V CH
C107	1-104-851-11	s	CAPACITOR,TANTALUM 10MF/10V
C108	1-107-686-11	s	CAPACITOR,CHIP ELECT 4.7MF/16V
C109	1-104-851-11	s	CAPACITOR,TANTALUM 10MF/10V
C110	1-110-569-11	s	CAPACITOR CHIP TANTAL47MF/6.3V
C111	1-104-851-11	s	CAPACITOR,TANTALUM 10MF/10V
C112	1-162-927-11	s	CAPACITOR,CERAMIC 100PF/50V CH
C113	1-126-395-11	s	CAPACITOR ELECT 22MF/16V(CHIP)
C114	1-107-826-11	s	CAPACITOR,CHIP CERAMIC 0.1MF
C115	1-104-553-11	s	CAPACITOR FILM 0.015MF/16V
C116	1-162-923-11	s	CAPACITOR,CERAMIC 47PF/50V CH
C117	1-162-927-11	s	CAPACITOR,CERAMIC 100PF/50V CH
C118	1-164-227-11	s	CAPACITOR,CERAMIC 0.022MF/25V
C119	1-164-227-11	s	CAPACITOR,CERAMIC 0.022MF/25V
C120	1-104-851-11	s	CAPACITOR,TANTALUM 10MF/10V
C121	1-126-398-11	s	CAPACITOR ELECT 4.7MF/35V(CHIP
C122	1-126-398-11	s	CAPACITOR ELECT 4.7MF/35V(CHIP
C123	1-162-969-11	s	CAPACITOR,CERAMIC 6800PF/25V B
C124	1-162-927-11	s	CAPACITOR,CERAMIC 100PF/50V CH
C125	1-162-927-11	s	CAPACITOR,CERAMIC 100PF/50V CH
C126	1-164-227-11	s	CAPACITOR,CERAMIC 0.022MF/25V
C127	1-164-227-11	s	CAPACITOR,CERAMIC 0.022MF/25V
C128	1-126-394-11	s	CAPACITOR ELECT 10MF/16V(CHIP)
C129	1-163-259-91	s	CAPACITOR,CHIP CERAMIC 220PF
C130	1-163-263-11	s	CAPACITOR CERAMIC 330PF/50V
C131	1-163-113-00	s	CAPACITOR,CHIP CERAMIC 68PF/50

(AU-249 BOARD)

Ref. No. or Q'ty	Part No.	SP	Description
C132	1-163-139-00	s	CAPACITOR,CHIP CERAMIC 820PF
C133	1-163-259-91	s	CAPACITOR,CHIP CERAMIC 220PF
C134	1-104-543-11	s	CAPACITOR,FILM 0.0022MF 50V
C135	1-163-137-00	s	CAPACITOR,CHIP CERAMIC 680PF
C136	1-126-396-11	s	CAPACITOR ELECT 47MF/16V(CHIP)
C137	1-104-561-11	s	CAPACITOR,FILM 0.068MF/16V
C138	1-104-913-11	s	CAPACITOR,CHIP TANTAL 10MF/16V
C139	1-104-913-11	s	CAPACITOR,CHIP TANTAL 10MF/16V
C140	1-126-395-11	s	CAPACITOR ELECT 22MF/16V(CHIP)
C142	1-164-227-11	s	CAPACITOR,CERAMIC 0.022MF/25V
C143	1-164-227-11	s	CAPACITOR,CERAMIC 0.022MF/25V
C201	1-162-927-11	s	CAPACITOR,CERAMIC 100PF/50V CH
C202	1-162-927-11	s	CAPACITOR,CERAMIC 100PF/50V CH
C203	1-126-396-11	s	CAPACITOR ELECT 47MF/16V(CHIP)
C204	1-162-921-11	s	CAPACITOR,CERAMIC 33PF/50V CH
C205	1-126-394-11	s	CAPACITOR ELECT 10MF/16V(CHIP)
C206	1-162-923-11	s	CAPACITOR,CERAMIC 47PF/50V CH
C207	1-104-851-11	s	CAPACITOR,TANTALUM 10MF/10V
C208	1-107-686-11	s	CAPACITOR,CHIP ELECT 4.7MF/16V
C209	1-104-851-11	s	CAPACITOR,TANTALUM 10MF/10V
C210	1-110-569-11	s	CAPACITOR CHIP TANTAL47MF/6.3V
C211	1-104-851-11	s	CAPACITOR,TANTALUM 10MF/10V
C212	1-162-927-11	s	CAPACITOR,CERAMIC 100PF/50V CH
C213	1-126-395-11	s	CAPACITOR ELECT 22MF/16V(CHIP)
C214	1-107-826-11	s	CAPACITOR,CHIP CERAMIC 0.1MF
C215	1-104-553-11	s	CAPACITOR FILM 0.015MF/16V
C216	1-162-923-11	s	CAPACITOR,CERAMIC 47PF/50V CH
C217	1-162-927-11	s	CAPACITOR,CERAMIC 100PF/50V CH
C218	1-164-227-11	s	CAPACITOR,CERAMIC 0.022MF/25V
C219	1-164-227-11	s	CAPACITOR,CERAMIC 0.022MF/25V
C220	1-104-851-11	s	CAPACITOR,TANTALUM 10MF/10V
C221	1-126-398-11	s	CAPACITOR ELECT 4.7MF/35V(CHIP
C222	1-126-398-11	s	CAPACITOR ELECT 4.7MF/35V(CHIP
C223	1-162-969-11	s	CAPACITOR,CERAMIC 6800PF/25V B
C224	1-162-927-11	s	CAPACITOR,CERAMIC 100PF/50V CH
C225	1-162-927-11	s	CAPACITOR,CERAMIC 100PF/50V CH
C226	1-164-227-11	s	CAPACITOR,CERAMIC 0.022MF/25V
C227	1-164-227-11	s	CAPACITOR,CERAMIC 0.022MF/25V
C228	1-126-394-11	s	CAPACITOR ELECT 10MF/16V(CHIP)
C229	1-163-259-91	s	CAPACITOR,CHIP CERAMIC 220PF
C230	1-163-263-11	s	CAPACITOR CERAMIC 330PF/50V
C231	1-163-113-00	s	CAPACITOR,CHIP CERAMIC 68PF/50
C232	1-163-139-00	s	CAPACITOR,CHIP CERAMIC 820PF
C233	1-163-259-91	s	CAPACITOR,CHIP CERAMIC 220PF
C234	1-104-543-11	s	CAPACITOR,FILM 0.0022MF 50V
C235	1-163-137-00	s	CAPACITOR,CHIP CERAMIC 680PF
C236	1-126-396-11	s	CAPACITOR ELECT 47MF/16V(CHIP)
C237	1-104-561-11	s	CAPACITOR,FILM 0.068MF/16V
C240	1-126-395-11	s	CAPACITOR ELECT 22MF/16V(CHIP)
C242	1-164-227-11	s	CAPACITOR,CERAMIC 0.022MF/25V
C243	1-164-227-11	s	CAPACITOR,CERAMIC 0.022MF/25V
C300	1-163-259-91	s	CAPACITOR,CHIP CERAMIC 220PF
C302	1-162-927-11	s	CAPACITOR,CERAMIC 100PF/50V CH
C303	1-162-927-11	s	CAPACITOR,CERAMIC 100PF/50V CH
C304	1-164-227-11	s	CAPACITOR,CERAMIC 0.022MF/25V
C305	1-164-227-11	s	CAPACITOR,CERAMIC 0.022MF/25V
C306	1-104-543-11	s	CAPACITOR,FILM 0.0022MF 50V
C307	1-104-539-11	s	CAPACITOR,CHIP FILM 0.001MF
C308	1-126-394-11	s	CAPACITOR ELECT 10MF/16V(CHIP)

(AU-249 BOARD)

Ref. No. or Q'ty	Part No.	SP	Description
C309	1-107-826-11	s	CAPACITOR,CHIP CERAMIC 0.1MF
C310	1-104-551-11	s	CAPACITOR FILM 0.01MF/16V 2125
C311	1-162-927-11	s	CAPACITOR,CERAMIC 100PF/50V CH
C312	1-126-396-11	s	CAPACITOR ELECT 47MF/16V(CHIP)
C314	1-164-227-11	s	CAPACITOR,CERAMIC 0.022MF/25V
C315	1-164-227-11	s	CAPACITOR,CERAMIC 0.022MF/25V
C400	1-163-259-91	s	CAPACITOR,CHIP CERAMIC 220PF
C402	1-162-927-11	s	CAPACITOR,CERAMIC 100PF/50V CH
C403	1-162-927-11	s	CAPACITOR,CERAMIC 100PF/50V CH
C404	1-164-227-11	s	CAPACITOR,CERAMIC 0.022MF/25V
C405	1-164-227-11	s	CAPACITOR,CERAMIC 0.022MF/25V
C406	1-104-543-11	s	CAPACITOR,FILM 0.0022MF 50V
C407	1-104-539-11	s	CAPACITOR,CHIP FILM 0.001MF
C408	1-126-394-11	s	CAPACITOR ELECT 10MF/16V(CHIP)
C409	1-107-826-11	s	CAPACITOR,CHIP CERAMIC 0.1MF
C410	1-104-551-11	s	CAPACITOR FILM 0.01MF/16V 2125
C411	1-162-927-11	s	CAPACITOR,CERAMIC 100PF/50V CH
C412	1-126-396-11	s	CAPACITOR ELECT 47MF/16V(CHIP)
C414	1-164-227-11	s	CAPACITOR,CERAMIC 0.022MF/25V
C415	1-164-227-11	s	CAPACITOR,CERAMIC 0.022MF/25V
C500	1-163-259-91	s	CAPACITOR,CHIP CERAMIC 220PF
C502	1-162-927-11	s	CAPACITOR,CERAMIC 100PF/50V CH
C503	1-162-927-11	s	CAPACITOR,CERAMIC 100PF/50V CH
C504	1-164-227-11	s	CAPACITOR,CERAMIC 0.022MF/25V
C505	1-164-227-11	s	CAPACITOR,CERAMIC 0.022MF/25V
C506	1-104-543-11	s	CAPACITOR,FILM 0.0022MF 50V
C507	1 104 539 11	s	CAPACITOR,CHIP FILM 0.001MF
C508	1-126-394-11	s	CAPACITOR ELECT 10MF/16V(CHIP)
C509	1-107-826-11	s	CAPACITOR,CHIP CERAMIC 0.1MF
C510	1-104-551-11	s	CAPACITOR FILM 0.01MF/16V 2125
C511	1-162-927-11	s	CAPACITOR,CERAMIC 100PF/50V CH
C514	1-164-227-11	s	CAPACITOR,CERAMIC 0.022MF/25V
C515	1-164-227-11	s	CAPACITOR,CERAMIC 0.022MF/25V
C516	1-164-227-11	s	CAPACITOR,CERAMIC 0.022MF/25V
C517	1-164-227-11	s	CAPACITOR,CERAMIC 0.022MF/25V
C518	1-126-396-11	s	CAPACITOR ELECT 47MF/16V(CHIP)
C600	1-163-259-91	s	CAPACITOR,CHIP CERAMIC 220PF
C602	1-162-927-11	s	CAPACITOR,CERAMIC 100PF/50V CH
C603	1-162-927-11	s	CAPACITOR,CERAMIC 100PF/50V CH
C604	1-164-227-11	s	CAPACITOR,CERAMIC 0.022MF/25V
C605	1-164-227-11	s	CAPACITOR,CERAMIC 0.022MF/25V
C606	1-104-543-11	s	CAPACITOR,FILM 0.0022MF 50V
C607	1-104-539-11	s	CAPACITOR,CHIP FILM 0.001MF
C608	1-126-394-11	s	CAPACITOR ELECT 10MF/16V(CHIP)
C609	1-107-826-11	s	CAPACITOR,CHIP CERAMIC 0.1MF
C610	1-104-551-11	s	CAPACITOR FILM 0.01MF/16V 2125
C611	1-162-927-11	s	CAPACITOR,CERAMIC 100PF/50V CH
C614	1-164-227-11	s	CAPACITOR,CERAMIC 0.022MF/25V
C615	1-164-227-11	s	CAPACITOR,CERAMIC 0.022MF/25V
C618	1-126-396-11	s	CAPACITOR ELECT 47MF/16V(CHIP)
C700	1-104-851-11	s	CAPACITOR,TANTALUM 10MF/10V
C701	1-104-851-11	s	CAPACITOR,TANTALUM 10MF/10V
C702	1-107-826-11	s	CAPACITOR,CHIP CERAMIC 0.1MF
C703	1-107-826-11	s	CAPACITOR,CHIP CERAMIC 0.1MF
C704	1-104-851-11	s	CAPACITOR,TANTALUM 10MF/10V
C705	1-107-826-11	s	CAPACITOR,CHIP CERAMIC 0.1MF
C709	1-164-227-11	s	CAPACITOR,CERAMIC 0.022MF/25V
C710	1-104-913-11	s	CAPACITOR,CHIP TANTAL 10MF/16V
C750	1-104-851-11	s	CAPACITOR,TANTALUM 10MF/10V

(AU-249 BOARD)

Ref. No. or Q'ty	Part No.	SP	Description
C751	1-104-851-11	s	CAPACITOR,TANTALUM 10MF/10V
C752	1-107-826-11	s	CAPACITOR,CHIP CERAMIC 0.1MF
C753	1-107-826-11	s	CAPACITOR,CHIP CERAMIC 0.1MF
C754	1-104-851-11	s	CAPACITOR,TANTALUM 10MF/10V
C755	1-107-826-11	s	CAPACITOR,CHIP CERAMIC 0.1MF
C759	1-164-227-11	s	CAPACITOR,CERAMIC 0.022MF/25V
C760	1-104-913-11	s	CAPACITOR,CHIP TANTAL 10MF/16V
C801	1-104-851-11	s	CAPACITOR,TANTALUM 10MF/10V
C802	1-107-826-11	s	CAPACITOR,CHIP CERAMIC 0.1MF
C803	1-104-851-11	s	CAPACITOR,TANTALUM 10MF/10V
C804	1-162-966-11	s	CAPACITOR,CERAMIC 2200PF/50V B
C805	1-107-826-11	s	CAPACITOR,CHIP CERAMIC 0.1MF
C806	1-162-964-11	s	CAPACITOR,CERAMIC 1000PF/50V B
C807	1-107-826-11	s	CAPACITOR,CHIP CERAMIC 0.1MF
C808	1-107-826-11	s	CAPACITOR,CHIP CERAMIC 0.1MF
C809	1-107-826-11	s	CAPACITOR,CHIP CERAMIC 0.1MF
C810	1-104-851-11	s	CAPACITOR,TANTALUM 10MF/10V
C811	1-164-227-11	s	CAPACITOR,CERAMIC 0.022MF/25V
C812	1-104-851-11	s	CAPACITOR,TANTALUM 10MF/10V
C813	1-164-227-11	s	CAPACITOR,CERAMIC 0.022MF/25V
C814	1-162-927-11	s	CAPACITOR,CERAMIC 100PF/50V CH
C815	1-164-227-11	s	CAPACITOR,CERAMIC 0.022MF/25V
C816	1-164-227-11	s	CAPACITOR,CERAMIC 0.022MF/25V
C817	1-164-227-11	s	CAPACITOR,CERAMIC 0.022MF/25V
C818	1-104-913-11	s	CAPACITOR,CHIP TANTAL 10MF/16V
C819	1-164-227-11	s	CAPACITOR,CERAMIC 0.022MF/25V
C820	1 164 227 11	s	CAPACITOR,CERAMIC 0.022MF/25V
C821	1-164-227-11	s	CAPACITOR,CERAMIC 0.022MF/25V
CN1	1-695-223-21	o	PIN, CONNECTOR (SMD) 10P
CN2	1-764-007-11	o	PIN, CONNECTOR (SMD) 12P
D1	8-719-029-63	s	ZENER DIODE RD4.3UH-T1
D2	8-719-029-63	s	ZENER DIODE RD4.3UH-T1
D3	8-719-029-63	s	ZENER DIODE RD4.3UH-T1
D101	8-719-941-23	s	DIODE DA204U
D102	8-719-941-09	s	DIODE DAP202U
D201	8-719-941-23	s	DIODE DA204U
D202	8-719-941-09	s	DIODE DAP202U
D801	8-719-041-79	s	DIODE MA721WA-TX
D802	8-719-041-79	s	DIODE MA721WA-TX
IC1	8-759-710-88	s	IC NJM431U
IC2	8-759-359-66	s	IC TL082CPW (E05)
IC3	8-759-359-66	s	IC TL082CPW (E05)
IC4	8-759-082-55	s	IC TC7W00FU
IC5	8-759-431-95	s	IC S-81230SGUP-DQB-T1
IC6	8-729-045-28	s	TRANSISTOR SI4532DY-T1
IC7	8-729-045-28	s	TRANSISTOR SI4532DY-T1
IC101	8-759-700-84	s	IC NJM2041MD
IC102	8-759-700-84	s	IC NJM2041MD
IC103	8-759-700-84	s	IC NJM2041MD
IC104	8-759-359-66	s	IC TL082CPW (E05)
IC105	8-759-082-55	s	IC TC7W00FU
IC106	8-759-465-02	s	IC DG201BDY-T1
IC107	8-759-700-84	s	IC NJM2041MD
IC108	8-759-106-02	s	IC UPC4570G2
IC109	8-759-106-02	s	IC UPC4570G2
IC110	8-741-164-50	s	IC SBX1645-01 (HYBRID)
IC111	8-759-359-66	s	IC TL082CPW (E05)
IC112	8-759-106-02	s	IC UPC4570G2

(AU-249 BOARD)

Ref. No. or Q'ty	Part No.	SP	Description
IC201	8-759-700-84	s	IC NJM2041MD
IC202	8-759-700-84	s	IC NJM2041MD
IC203	8-759-700-84	s	IC NJM2041MD
IC204	8-759-359-66	s	IC TL082CPW (E05)
IC205	8-759-082-55	s	IC TC7W00FU
IC206	8-759-465-02	s	IC DG201BDY-T1
IC207	8-759-700-84	s	IC NJM2041MD
IC208	8-759-106-02	s	IC UPC4570G2
IC209	8-759-106-02	s	IC UPC4570G2
IC212	8-759-271-86	s	IC TC7SH04FU
IC301	8-759-700-84	s	IC NJM2041MD
IC302	8-759-700-84	s	IC NJM2041MD
IC401	8-759-700-84	s	IC NJM2041MD
IC402	8-759-700-84	s	IC NJM2041MD
IC501	8-759-700-84	s	IC NJM2041MD
IC502	8-759-700-84	s	IC NJM2041MD
IC503	8-759-271-86	s	IC TC7SH04FU
IC504	8-759-465-02	s	IC DG201BDY-T1
IC601	8-759-700-84	s	IC NJM2041MD
IC602	8-759-700-84	s	IC NJM2041MD
IC603	8-759-271-86	s	IC TC7SH04FU
IC701	8-759-049-66	s	IC SN74HC125APW-E05
IC702	8-759-271-84	s	IC TC7SH02FU
IC703	8-759-536-23	s	IC AK4324-VF-E2
IC704	8-759-271-86	s	IC TC7SH04FU
IC751	8-759-049-66	s	IC SN74HC125APW-E05
IC752	8 759 271 84	s	IC TC7SH02FU
IC753	8-759-536-23	s	IC AK4324-VF-E2
IC755	8-759-271-86	s	IC TC7SH04FU
IC801	8-759-462-08	s	IC AK5352-VF (E2)
IC802	8-759-049-66	s	IC SN74HC125APW-E05
IC803	8-759-083-94	s	IC TC7W74FU
IC804	8-759-196-96	s	IC TC7SH08FU (TE85R)
IC805	8-759-391-30	s	IC 74LVX3245QSCX
IC806	8-759-391-30	s	IC 74LVX3245QSCX
IC807	8-759-391-30	s	IC 74LVX3245QSCX
IC808	8-759-196-96	s	IC TC7SH08FU (TE85R)
L1	1-406-864-21	s	COIL,CHOKE 4.7UH
L2	1-406-864-21	s	COIL,CHOKE 4.7UH
L701	1-412-170-11	s	MICRO INDUCTOR 0.47UH
L751	1-412-170-11	s	MICRO INDUCTOR 0.47UH
L801	1-412-170-11	s	MICRO INDUCTOR 0.47UH
L802	1-412-170-11	s	MICRO INDUCTOR 0.47UH
Q1	8-729-020-94	s	TRANSISTOR 2SA1314C-TE12L
Q2	8-729-808-42	s	TRANSISTOR 2SD1624-T
Q3	8-729-141-48	s	TRANSISTOR 2SB624-BV345
Q4	8-729-029-14	s	TRANSISTOR DTC144EUA-T106
Q5	8-729-029-14	s	TRANSISTOR DTC144EUA-T106
Q6	8-729-028-91	s	TRANSISTOR DTA144EUA-T106
Q7	8-729-028-91	s	TRANSISTOR DTA144EUA-T106
Q8	8-729-029-14	s	TRANSISTOR DTC144EUA-T106
Q9	8-729-029-14	s	TRANSISTOR DTC144EUA-T106
Q10	8-729-230-63	s	TRANSISTOR 2SC4116-YG
Q101	8-729-014-86	s	TRANSISTOR 2SC4207-YGR-TE85L
Q102	8-729-140-63	s	TRANSISTOR 2SA1611-M5M6
Q103	8-729-230-63	s	TRANSISTOR 2SC4116-YG
Q104	8-729-230-63	s	TRANSISTOR 2SC4116-YG
Q105	8-729-230-63	s	TRANSISTOR 2SC4116-YG

(AU-249 BOARD)

Ref. No. or Q'ty	Part No.	SP	Description
Q106	8-729-230-63	s	TRANSISTOR 2SC4116-YG
Q107	8-729-230-63	s	TRANSISTOR 2SC4116-YG
Q108	8-729-140-63	s	TRANSISTOR 2SA1611-M5M6
Q109	8-729-012-35	s	FET 2SK711-BL
Q201	8-729-014-86	s	TRANSISTOR 2SC4207-YGR-TE85L
Q202	8-729-140-63	s	TRANSISTOR 2SA1611-M5M6
Q203	8-729-230-63	s	TRANSISTOR 2SC4116-YG
Q204	8-729-230-63	s	TRANSISTOR 2SC4116-YG
Q205	8-729-230-63	s	TRANSISTOR 2SC4116-YG
Q206	8-729-230-63	s	TRANSISTOR 2SC4116-YG
Q207	8-729-230-63	s	TRANSISTOR 2SC4116-YG
Q208	8-729-140-63	s	TRANSISTOR 2SA1611-M5M6
Q209	8-729-012-35	s	FET 2SK711-BL
Q210	8-729-029-14	s	TRANSISTOR DTC144EUA-T106
Q301	8-729-012-35	s	FET 2SK711-BL
Q302	8-729-140-63	s	TRANSISTOR 2SA1611-M5M6
Q401	8-729-012-35	s	FET 2SK711-BL
Q402	8-729-140-63	s	TRANSISTOR 2SA1611-M5M6
Q501	8-729-012-35	s	FET 2SK711-BL
Q502	8-729-140-63	s	TRANSISTOR 2SA1611-M5M6
Q601	8-729-012-35	s	FET 2SK711-BL
Q602	8-729-140-63	s	TRANSISTOR 2SA1611-M5M6
Q701	8-729-028-91	s	TRANSISTOR DTA144EUA-T106
Q751	8-729-028-91	s	TRANSISTOR DTA144EUA-T106
Q801	8-729-029-14	s	TRANSISTOR DTC144EUA-T106
R1	1-218-698-11	s	RESISTOR,CHIP 1.8K 1/16W(1608)
R2	1 218 724 11	s	RESISTOR,CHIP 22K 1/16W(1608)
R3	1-218-724-11	s	RESISTOR,CHIP 22K 1/16W(1608)
R4	1-216-864-11	s	RESISTOR,CHIP 0 1/16W (1608)
R5	1-218-724-11	s	RESISTOR,CHIP 22K 1/16W(1608)
R6	1-218-724-11	s	RESISTOR,CHIP 22K 1/16W(1608)
R7	1-218-702-11	s	RESISTOR CHIP 2.7K 1/16W(1608)
R8	1-218-740-11	s	RESISTOR,CHIP 100K 1/16W(1608)
R9	1-218-732-11	s	RESISTOR,CHIP 47K 1/16W(1608)
R10	1-218-732-11	s	RESISTOR,CHIP 47K 1/16W(1608)
R11	1-218-740-11	s	RESISTOR,CHIP 100K 1/16W(1608)
R12	1-218-740-11	s	RESISTOR,CHIP 100K 1/16W(1608)
R13	1-218-740-11	s	RESISTOR,CHIP 100K 1/16W(1608)
R14	1-218-740-11	s	RESISTOR,CHIP 100K 1/16W(1608)
R15	1-218-716-11	s	RESISTOR,CHIP 10K 1/16W(1608)
R16	1-218-716-11	s	RESISTOR,CHIP 10K 1/16W(1608)
R17	1-218-716-11	s	RESISTOR,CHIP 10K 1/16W(1608)
R18	1-218-716-11	s	RESISTOR,CHIP 10K 1/16W(1608)
R19	1-218-751-11	s	RESISTOR,CHIP 300K 1/16W(1608)
R20	1-218-724-11	s	RESISTOR,CHIP 22K 1/16W(1608)
R21	1-218-732-11	s	RESISTOR,CHIP 47K 1/16W(1608)
R22	1-218-744-11	s	RESISTOR,METAL 150K 1/16
R101	1-218-700-11	s	RESISTOR,CHIP 2.2K 1/16W(1608)
R102	1-218-700-11	s	RESISTOR,CHIP 2.2K 1/16W(1608)
R103	1-218-700-11	s	RESISTOR,CHIP 2.2K 1/16W(1608)
R104	1-218-700-11	s	RESISTOR,CHIP 2.2K 1/16W(1608)
R105	1-218-706-11	s	RESISTOR,CHIP 3.9K 1/16W(1608)
R106	1-218-698-11	s	RESISTOR,CHIP 1.8K 1/16W(1608)
R107	1-218-708-11	s	RESISTOR,CHIP 4.7K 1/16W(1608)
R108	1-218-652-11	s	RESISTOR,CHIP 22 1/16W (1608)
R109	1-218-684-11	s	RESISTOR CHIP 470 1/16W (1608)
R110	1-218-722-11	s	RESISTOR,CHIP 18K 1/16W 1608
R111	1-218-700-11	s	RESISTOR,CHIP 2.2K 1/16W(1608)
R112	1-218-675-11	s	RESISTOR,CHIP 200 1/16W (1608)

(AU-249 BOARD)

Ref. No. or Q'ty	Part No.	SP	Description
R114	1-218-732-11	s	RESISTOR,CHIP 47K 1/16W(1608)
R115	1-218-716-11	s	RESISTOR,CHIP 10K 1/16W(1608)
R116	1-218-716-11	s	RESISTOR,CHIP 10K 1/16W(1608)
R117	1-218-723-11	s	RESISTOR,CHIP 20K 1/16W(1608)
R118	1-218-708-11	s	RESISTOR,CHIP 4.7K 1/16W(1608)
R119	1-218-700-11	s	RESISTOR,CHIP 2.2K 1/16W(1608)
R120	1-218-723-11	s	RESISTOR,CHIP 20K 1/16W(1608)
R121	1-218-702-11	s	RESISTOR CHIP 2.7K 1/16W(1608)
R122	1-218-716-11	s	RESISTOR,CHIP 10K 1/16W(1608)
R123	1-218-716-11	s	RESISTOR,CHIP 10K 1/16W(1608)
R124	1-218-716-11	s	RESISTOR,CHIP 10K 1/16W(1608)
R125	1-218-748-11	s	RESISTOR,CHIP 220K 1/16W(1608)
R126	1-218-684-11	s	RESISTOR CHIP 470 1/16W (1608)
R127	1-218-708-11	s	RESISTOR,CHIP 4.7K 1/16W(1608)
R128	1-218-716-11	s	RESISTOR,CHIP 10K 1/16W(1608)
R129	1-218-668-11	s	RESISTOR,CHIP 100 1/16W (1608)
R131	1-218-702-11	s	RESISTOR CHIP 2.7K 1/16W(1608)
R132	1-218-726-11	s	RESISTOR CHIP 27K 1/16W (1608)
R133	1-218-693-11	s	RESISTOR,CHIP 1.1K 1/16W(1608)
R134	1-218-734-11	s	RESISTOR,CHIP 56K 1/16W(1608)
R135	1-218-692-11	s	RESISTOR,CHIP 1.0K 1/16W(1608)
R136	1-218-698-11	s	RESISTOR,CHIP 1.8K 1/16W(1608)
R137	1-218-730-11	s	RESISTOR METAL FILM CHIP 39K
R138	1-218-724-11	s	RESISTOR,CHIP 22K 1/16W(1608)
R139	1-218-716-11	s	RESISTOR,CHIP 10K 1/16W(1608)
R140	1-218-722-11	s	RESISTOR,CHIP 18K 1/16W 1608
R141	1 218 726 11	s	RESISTOR CHIP 27K 1/16W (1608)
R142	1-218-716-11	s	RESISTOR,CHIP 10K 1/16W(1608)
R143	1-218-692-11	s	RESISTOR,CHIP 1.0K 1/16W(1608)
R144	1-216-857-11	s	RESISTOR,CHIP 1.0M 1/16W 1608
R145	1-218-704-11	s	RESISTOR,CHIP 3.3K 1/16W(1608)
R146	1-218-734-11	s	RESISTOR,CHIP 56K 1/16W(1608)
R147	1-218-734-11	s	RESISTOR,CHIP 56K 1/16W(1608)
R148	1-218-740-11	s	RESISTOR,CHIP 100K 1/16W(1608)
R149	1-218-704-11	s	RESISTOR,CHIP 3.3K 1/16W(1608)
R150	1-218-712-11	s	RESISTOR,METAL 6.8K 1/16W
R151	1-218-732-11	s	RESISTOR,CHIP 47K 1/16W(1608)
R152	1-218-727-11	s	RESISTOR,CHIP 30K 1/16W(1608)
R153	1-218-732-11	s	RESISTOR,CHIP 47K 1/16W(1608)
R154	1-218-732-11	s	RESISTOR,CHIP 47K 1/16W(1608)
R155	1-218-666-11	s	RESISTOR CHIP 82 1/16W (1608)
R156	1-218-666-11	s	RESISTOR CHIP 82 1/16W (1608)
R157	1-218-700-11	s	RESISTOR,CHIP 2.2K 1/16W(1608)
R158	1-218-700-11	s	RESISTOR,CHIP 2.2K 1/16W(1608)
R159	1-218-706-11	s	RESISTOR,CHIP 3.9K 1/16W(1608)
R160	1-218-706-11	s	RESISTOR,CHIP 3.9K 1/16W(1608)
R161	1-218-724-11	s	RESISTOR,CHIP 22K 1/16W(1608)
R162	1-218-716-11	s	RESISTOR,CHIP 10K 1/16W(1608)
R163	1-218-716-11	s	RESISTOR,CHIP 10K 1/16W(1608)
R164	1-218-716-11	s	RESISTOR,CHIP 10K 1/16W(1608)
R165	1-218-716-11	s	RESISTOR,CHIP 10K 1/16W(1608)
R166	1-218-716-11	s	RESISTOR,CHIP 10K 1/16W(1608)
R167	1-218-702-11	s	RESISTOR CHIP 2.7K 1/16W(1608)
R168	1-218-716-11	s	RESISTOR,CHIP 10K 1/16W(1608)
R169	1-218-683-11	s	RESISTOR CHIP 430 1/16W (1608)
R170	1-218-716-11	s	RESISTOR,CHIP 10K 1/16W(1608)
R171	1-216-864-11	s	RESISTOR,CHIP 0 1/16W (1608)
R172	1-216-864-11	s	RESISTOR,CHIP 0 1/16W (1608)
R173	1-218-676-11	s	RESISTOR,CHIP 220 1/16W(1608)

(AU-249 BOARD)

Ref. No. or Q'ty	Part No.	SP	Description
R201	1-218-700-11	s	RESISTOR,CHIP 2.2K 1/16W(1608)
R202	1-218-700-11	s	RESISTOR,CHIP 2.2K 1/16W(1608)
R203	1-218-700-11	s	RESISTOR,CHIP 2.2K 1/16W(1608)
R204	1-218-700-11	s	RESISTOR,CHIP 2.2K 1/16W(1608)
R205	1-218-706-11	s	RESISTOR,CHIP 3.9K 1/16W(1608)
R206	1-218-698-11	s	RESISTOR,CHIP 1.8K 1/16W(1608)
R207	1-218-708-11	s	RESISTOR,CHIP 4.7K 1/16W(1608)
R208	1-218-652-11	s	RESISTOR,CHIP 22 1/16W (1608)
R209	1-218-684-11	s	RESISTOR CHIP 470 1/16W (1608)
R210	1-218-722-11	s	RESISTOR,CHIP 18K 1/16W 1608
R211	1-218-700-11	s	RESISTOR,CHIP 2.2K 1/16W(1608)
R212	1-218-675-11	s	RESISTOR,CHIP 200 1/16W (1608)
R214	1-218-732-11	s	RESISTOR,CHIP 47K 1/16W(1608)
R215	1-218-716-11	s	RESISTOR,CHIP 10K 1/16W(1608)
R216	1-218-716-11	s	RESISTOR,CHIP 10K 1/16W(1608)
R217	1-218-723-11	s	RESISTOR,CHIP 20K 1/16W(1608)
R218	1-218-708-11	s	RESISTOR,CHIP 4.7K 1/16W(1608)
R219	1-218-700-11	s	RESISTOR,CHIP 2.2K 1/16W(1608)
R220	1-218-723-11	s	RESISTOR,CHIP 20K 1/16W(1608)
R221	1-218-702-11	s	RESISTOR CHIP 2.7K 1/16W(1608)
R222	1-218-716-11	s	RESISTOR,CHIP 10K 1/16W(1608)
R223	1-218-716-11	s	RESISTOR,CHIP 10K 1/16W(1608)
R224	1-218-716-11	s	RESISTOR,CHIP 10K 1/16W(1608)
R225	1-218-748-11	s	RESISTOR,CHIP 220K 1/16W(1608)
R226	1-218-684-11	s	RESISTOR CHIP 470 1/16W (1608)
R227	1-218-708-11	s	RESISTOR,CHIP 4.7K 1/16W(1608)
R228	1 218 716 11	s	RESISTOR,CHIP 10K 1/16W(1608)
R229	1-218-668-11	s	RESISTOR,CHIP 100 1/16W (1608)
R231	1-218-702-11	s	RESISTOR CHIP 2.7K 1/16W(1608)
R232	1-218-726-11	s	RESISTOR CHIP 27K 1/16W (1608)
R233	1-218-693-11	s	RESISTOR,CHIP 1.1K 1/16W(1608)
R234	1-218-734-11	s	RESISTOR,CHIP 56K 1/16W(1608)
R235	1-218-692-11	s	RESISTOR,CHIP 1.0K 1/16W(1608)
R236	1-218-698-11	s	RESISTOR,CHIP 1.8K 1/16W(1608)
R237	1-218-730-11	s	RESISTOR METAL FILM CHIP 39K
R238	1-218-724-11	s	RESISTOR,CHIP 22K 1/16W(1608)
R239	1-218-716-11	s	RESISTOR,CHIP 10K 1/16W(1608)
R240	1-218-722-11	s	RESISTOR,CHIP 18K 1/16W 1608
R241	1-218-726-11	s	RESISTOR CHIP 27K 1/16W (1608)
R242	1-218-716-11	s	RESISTOR,CHIP 10K 1/16W(1608)
R243	1-218-692-11	s	RESISTOR,CHIP 1.0K 1/16W(1608)
R244	1-216-857-11	s	RESISTOR,CHIP 1.0M 1/16W 1608
R245	1-218-704-11	s	RESISTOR,CHIP 3.3K 1/16W(1608)
R246	1-218-734-11	s	RESISTOR,CHIP 56K 1/16W(1608)
R247	1-218-734-11	s	RESISTOR,CHIP 56K 1/16W(1608)
R248	1-218-740-11	s	RESISTOR,CHIP 100K 1/16W(1608)
R249	1-218-704-11	s	RESISTOR,CHIP 3.3K 1/16W(1608)
R250	1-218-712-11	s	RESISTOR,METAL 6.8K 1/16W
R251	1-218-732-11	s	RESISTOR,CHIP 47K 1/16W(1608)
R252	1-218-727-11	s	RESISTOR,CHIP 30K 1/16W(1608)
R253	1-218-732-11	s	RESISTOR,CHIP 47K 1/16W(1608)
R254	1-218-732-11	s	RESISTOR,CHIP 47K 1/16W(1608)
R255	1-218-666-11	s	RESISTOR CHIP 82 1/16W (1608)
R256	1-218-666-11	s	RESISTOR CHIP 82 1/16W (1608)
R257	1-218-700-11	s	RESISTOR,CHIP 2.2K 1/16W(1608)
R258	1-218-700-11	s	RESISTOR,CHIP 2.2K 1/16W(1608)
R259	1-218-706-11	s	RESISTOR,CHIP 3.9K 1/16W(1608)
R260	1-218-706-11	s	RESISTOR,CHIP 3.9K 1/16W(1608)
R261	1-218-724-11	s	RESISTOR,CHIP 22K 1/16W(1608)

(AU-249 BOARD)

Ref. No. or Q'ty	Part No.	SP	Description
R262	1-218-716-11	s	RESISTOR,CHIP 10K 1/16W(1608)
R263	1-218-716-11	s	RESISTOR,CHIP 10K 1/16W(1608)
R264	1-218-716-11	s	RESISTOR,CHIP 10K 1/16W(1608)
R265	1-218-716-11	s	RESISTOR,CHIP 10K 1/16W(1608)
R266	1-218-716-11	s	RESISTOR,CHIP 10K 1/16W(1608)
R267	1-218-702-11	s	RESISTOR CHIP 2.7K 1/16W(1608)
R268	1-218-716-11	s	RESISTOR,CHIP 10K 1/16W(1608)
R269	1-218-683-11	s	RESISTOR CHIP 430 1/16W (1608)
R270	1-218-716-11	s	RESISTOR,CHIP 10K 1/16W(1608)
R271	1-216-864-11	s	RESISTOR,CHIP 0 1/16W (1608)
R272	1-216-864-11	s	RESISTOR,CHIP 0 1/16W (1608)
R273	1-218-676-11	s	RESISTOR,CHIP 220 1/16W(1608)
R300	1-218-735-11	s	RESISTOR CHIP 62K 1/16W(1608)
R301	1-218-697-11	s	RESISTOR,CHIP 1.6K 1/16W(1608)
R302	1-218-708-11	s	RESISTOR,CHIP 4.7K 1/16W(1608)
R304	1-218-697-11	s	RESISTOR,CHIP 1.6K 1/16W(1608)
R305	1-218-696-11	s	RESISTOR CHIP 1.5K 1/16W(1608)
R306	1-218-696-11	s	RESISTOR CHIP 1.5K 1/16W(1608)
R307	1-218-707-11	s	RESISTOR,CHIP 4.3K 1/16W(1608)
R308	1-218-716-11	s	RESISTOR,CHIP 10K 1/16W(1608)
R309	1-218-740-11	s	RESISTOR,CHIP 100K 1/16W(1608)
R310	1-218-722-11	s	RESISTOR,CHIP 18K 1/16W 1608
R311	1-218-690-11	s	RESISTOR CHIP 820 1/16W (1608)
R312	1-218-696-11	s	RESISTOR CHIP 1.5K 1/16W(1608)
R313	1-216-857-11	s	RESISTOR,CHIP 1.0M 1/16W 1608
R314	1-218-692-11	s	RESISTOR,CHIP 1.0K 1/16W(1608)
R315	1 218 700 11	s	RESISTOR,CHIP 2.2K 1/16W(1608)
R316	1-218-710-11	s	RESISTOR,CHIP 5.6K 1/16W(1608)
R317	1-218-736-11	s	RESISTOR,CHIP 68K 1/16W(1608)
R318	1-218-700-11	s	RESISTOR,CHIP 2.2K 1/16W(1608)
R319	1-218-720-11	s	RESISTOR,CHIP 15K 1/16W(1608)
R320	1-218-712-11	s	RESISTOR,METAL 6.8K 1/16W
R322	1-216-864-11	s	RESISTOR,CHIP 0 1/16W (1608)
R323	1-216-864-11	s	RESISTOR,CHIP 0 1/16W (1608)
R324	1-216-864-11	s	RESISTOR,CHIP 0 1/16W (1608)
R325	1-218-716-11	s	RESISTOR,CHIP 10K 1/16W(1608)
R326	1-218-716-11	s	RESISTOR,CHIP 10K 1/16W(1608)
R327	1-218-720-11	s	RESISTOR,CHIP 15K 1/16W(1608)
R328	1-218-708-11	s	RESISTOR,CHIP 4.7K 1/16W(1608)
R400	1-218-735-11	s	RESISTOR CHIP 62K 1/16W(1608)
R401	1-218-697-11	s	RESISTOR,CHIP 1.6K 1/16W(1608)
R402	1-218-708-11	s	RESISTOR,CHIP 4.7K 1/16W(1608)
R404	1-218-697-11	s	RESISTOR,CHIP 1.6K 1/16W(1608)
R405	1-218-696-11	s	RESISTOR CHIP 1.5K 1/16W(1608)
R406	1-218-696-11	s	RESISTOR CHIP 1.5K 1/16W(1608)
R407	1-218-707-11	s	RESISTOR,CHIP 4.3K 1/16W(1608)
R408	1-218-716-11	s	RESISTOR,CHIP 10K 1/16W(1608)
R409	1-218-740-11	s	RESISTOR,CHIP 100K 1/16W(1608)
R410	1-218-722-11	s	RESISTOR,CHIP 18K 1/16W 1608
R411	1-218-690-11	s	RESISTOR CHIP 820 1/16W (1608)
R412	1-218-696-11	s	RESISTOR CHIP 1.5K 1/16W(1608)
R413	1-216-857-11	s	RESISTOR,CHIP 1.0M 1/16W 1608
R414	1-218-692-11	s	RESISTOR,CHIP 1.0K 1/16W(1608)
R415	1-218-700-11	s	RESISTOR,CHIP 2.2K 1/16W(1608)
R416	1-218-710-11	s	RESISTOR,CHIP 5.6K 1/16W(1608)
R417	1-218-736-11	s	RESISTOR,CHIP 68K 1/16W(1608)
R418	1-218-700-11	s	RESISTOR,CHIP 2.2K 1/16W(1608)
R419	1-218-720-11	s	RESISTOR,CHIP 15K 1/16W(1608)
R420	1-218-712-11	s	RESISTOR,METAL 6.8K 1/16W

(AU-249 BOARD)

Ref. No. or Q'ty	Part No.	SP	Description
R422	1-216-864-11	s	RESISTOR,CHIP 0 1/16W (1608)
R423	1-216-864-11	s	RESISTOR,CHIP 0 1/16W (1608)
R424	1-216-864-11	s	RESISTOR,CHIP 0 1/16W (1608)
R425	1-218-716-11	s	RESISTOR,CHIP 10K 1/16W(1608)
R426	1-218-716-11	s	RESISTOR,CHIP 10K 1/16W(1608)
R427	1-218-720-11	s	RESISTOR,CHIP 15K 1/16W(1608)
R430	1-218-708-11	s	RESISTOR,CHIP 4.7K 1/16W(1608)
R500	1-218-735-11	s	RESISTOR CHIP 62K 1/16W(1608)
R501	1-218-697-11	s	RESISTOR,CHIP 1.6K 1/16W(1608)
R502	1-218-708-11	s	RESISTOR,CHIP 4.7K 1/16W(1608)
R504	1-218-697-11	s	RESISTOR,CHIP 1.6K 1/16W(1608)
R505	1-218-696-11	s	RESISTOR CHIP 1.5K 1/16W(1608)
R506	1-218-696-11	s	RESISTOR CHIP 1.5K 1/16W(1608)
R507	1-218-707-11	s	RESISTOR,CHIP 4.3K 1/16W(1608)
R508	1-218-716-11	s	RESISTOR,CHIP 10K 1/16W(1608)
R509	1-218-740-11	s	RESISTOR,CHIP 100K 1/16W(1608)
R510	1-218-722-11	s	RESISTOR,CHIP 18K 1/16W 1608
R511	1-218-690-11	s	RESISTOR CHIP 820 1/16W (1608)
R512	1-218-696-11	s	RESISTOR CHIP 1.5K 1/16W(1608)
R513	1-216-857-11	s	RESISTOR,CHIP 1.0M 1/16W 1608
R514	1-218-692-11	s	RESISTOR,CHIP 1.0K 1/16W(1608)
R515	1-218-700-11	s	RESISTOR,CHIP 2.2K 1/16W(1608)
R516	1-218-710-11	s	RESISTOR,CHIP 5.6K 1/16W(1608)
R517	1-218-736-11	s	RESISTOR,CHIP 68K 1/16W(1608)
R518	1-218-700-11	s	RESISTOR,CHIP 2.2K 1/16W(1608)
R519	1-218-720-11	s	RESISTOR,CHIP 15K 1/16W(1608)
R521	1 216 864 11	s	RESISTOR,CHIP 0 1/16W (1608)
R522	1-216-864-11	s	RESISTOR,CHIP 0 1/16W (1608)
R523	1-216-864-11	s	RESISTOR,CHIP 0 1/16W (1608)
R524	1-216-864-11	s	RESISTOR,CHIP 0 1/16W (1608)
R525	1-218-716-11	s	RESISTOR,CHIP 10K 1/16W(1608)
R526	1-218-716-11	s	RESISTOR,CHIP 10K 1/16W(1608)
R527	1-218-720-11	s	RESISTOR,CHIP 15K 1/16W(1608)
R528	1-218-708-11	s	RESISTOR,CHIP 4.7K 1/16W(1608)
R529	1-218-712-11	s	RESISTOR,METAL 6.8K 1/16W
R530	1-216-864-11	s	RESISTOR,CHIP 0 1/16W (1608)
R600	1-218-735-11	s	RESISTOR CHIP 62K 1/16W(1608)
R601	1-218-697-11	s	RESISTOR,CHIP 1.6K 1/16W(1608)
R602	1-218-708-11	s	RESISTOR,CHIP 4.7K 1/16W(1608)
R604	1-218-697-11	s	RESISTOR,CHIP 1.6K 1/16W(1608)
R605	1-218-696-11	s	RESISTOR CHIP 1.5K 1/16W(1608)
R606	1-218-696-11	s	RESISTOR CHIP 1.5K 1/16W(1608)
R607	1-218-707-11	s	RESISTOR,CHIP 4.3K 1/16W(1608)
R608	1-218-716-11	s	RESISTOR,CHIP 10K 1/16W(1608)
R609	1-218-740-11	s	RESISTOR,CHIP 100K 1/16W(1608)
R610	1-218-722-11	s	RESISTOR,CHIP 18K 1/16W 1608
R611	1-218-690-11	s	RESISTOR CHIP 820 1/16W (1608)
R612	1-218-696-11	s	RESISTOR CHIP 1.5K 1/16W(1608)
R613	1-216-857-11	s	RESISTOR,CHIP 1.0M 1/16W 1608
R614	1-218-692-11	s	RESISTOR,CHIP 1.0K 1/16W(1608)
R615	1-218-700-11	s	RESISTOR,CHIP 2.2K 1/16W(1608)
R616	1-218-710-11	s	RESISTOR,CHIP 5.6K 1/16W(1608)
R617	1-218-736-11	s	RESISTOR,CHIP 68K 1/16W(1608)
R618	1-218-700-11	s	RESISTOR,CHIP 2.2K 1/16W(1608)
R619	1-218-720-11	s	RESISTOR,CHIP 15K 1/16W(1608)
R620	1-216-864-11	s	RESISTOR,CHIP 0 1/16W (1608)
R622	1-216-864-11	s	RESISTOR,CHIP 0 1/16W (1608)
R623	1-216-864-11	s	RESISTOR,CHIP 0 1/16W (1608)
R624	1-216-864-11	s	RESISTOR,CHIP 0 1/16W (1608)

(AU-249 BOARD)

Ref. No. or Q'ty	Part No.	SP	Description
R625	1-218-716-11	s	RESISTOR,CHIP 10K 1/16W(1608)
R626	1-218-716-11	s	RESISTOR,CHIP 10K 1/16W(1608)
R627	1-218-720-11	s	RESISTOR,CHIP 15K 1/16W(1608)
R628	1-216-864-11	s	RESISTOR,CHIP 0 1/16W (1608)
R629	1-218-712-11	s	RESISTOR,METAL 6.8K 1/16W
R630	1-218-708-11	s	RESISTOR,CHIP 4.7K 1/16W(1608)
R631	1-216-864-11	s	RESISTOR,CHIP 0 1/16W (1608)
R700	1-218-716-11	s	RESISTOR,CHIP 10K 1/16W(1608)
R702	1-218-740-11	s	RESISTOR,CHIP 100K 1/16W(1608)
R704	1-218-740-11	s	RESISTOR,CHIP 100K 1/16W(1608)
R705	1-216-864-11	s	RESISTOR,CHIP 0 1/16W (1608)
R706	1-216-864-11	s	RESISTOR,CHIP 0 1/16W (1608)
R707	1-216-864-11	s	RESISTOR,CHIP 0 1/16W (1608)
R708	1-216-864-11	s	RESISTOR,CHIP 0 1/16W (1608)
R709	1-218-716-11	s	RESISTOR,CHIP 10K 1/16W(1608)
R712	1-218-644-11	s	RESISTOR,METAL 10 1/16W
R714	1-216-864-11	s	RESISTOR,CHIP 0 1/16W (1608)
R715	1-218-716-11	s	RESISTOR,CHIP 10K 1/16W(1608)
R750	1-218-716-11	s	RESISTOR,CHIP 10K 1/16W(1608)
R752	1-218-740-11	s	RESISTOR,CHIP 100K 1/16W(1608)
R754	1-218-740-11	s	RESISTOR,CHIP 100K 1/16W(1608)
R755	1-216-864-11	s	RESISTOR,CHIP 0 1/16W (1608)
R756	1-216-864-11	s	RESISTOR,CHIP 0 1/16W (1608)
R757	1-216-864-11	s	RESISTOR,CHIP 0 1/16W (1608)
R758	1-216-864-11	s	RESISTOR,CHIP 0 1/16W (1608)
R759	1-218-716-11	s	RESISTOR,CHIP 10K 1/16W(1608)
R762	1 218 644 11	s	RESISTOR,METAL 10 1/16W
R764	1-216-864-11	s	RESISTOR,CHIP 0 1/16W (1608)
R801	1-218-644-11	s	RESISTOR,METAL 10 1/16W
R804	1-216-864-11	s	RESISTOR,CHIP 0 1/16W (1608)
R805	1-216-864-11	s	RESISTOR,CHIP 0 1/16W (1608)
R806	1-218-644-11	s	RESISTOR,METAL 10 1/16W
R807	1-216-864-11	s	RESISTOR,CHIP 0 1/16W (1608)
R808	1-218-740-11	s	RESISTOR,CHIP 100K 1/16W(1608)
R809	1-218-740-11	s	RESISTOR,CHIP 100K 1/16W(1608)
R810	1-218-668-11	s	RESISTOR,CHIP 100 1/16W (1608)
R811	1-218-740-11	s	RESISTOR,CHIP 100K 1/16W(1608)
R812	1-218-740-11	s	RESISTOR,CHIP 100K 1/16W(1608)
R813	1-218-668-11	s	RESISTOR,CHIP 100 1/16W (1608)
R814	1-218-740-11	s	RESISTOR,CHIP 100K 1/16W(1608)
R815	1-218-740-11	s	RESISTOR,CHIP 100K 1/16W(1608)
R816	1-218-668-11	s	RESISTOR,CHIP 100 1/16W (1608)
RB801	1-236-907-11	s	RESISTOR BLOCK 100K (1608)
RB802	1-236-907-11	s	RESISTOR BLOCK 100K (1608)
RB803	1-236-907-11	s	RESISTOR BLOCK 100K (1608)
RB804	1-236-907-11	s	RESISTOR BLOCK 100K (1608)
RB805	1-236-907-11	s	RESISTOR BLOCK 100K (1608)
RB806	1-236-907-11	s	RESISTOR BLOCK 100K (1608)
RB807	1-236-907-11	s	RESISTOR BLOCK 100K (1608)
RV1	1-237-039-11	s	RESISTOR,ADJ,CERMET 100K
RV101	1-237-032-11	s	RESISTOR,ADJ,CERMET 500
RV102	1-237-031-11	s	RESISTOR,ADJ,CERMET 200
RV201	1-237-032-11	s	RESISTOR,ADJ,CERMET 500
RV202	1-237-031-11	s	RESISTOR,ADJ,CERMET 200
RV301	1-237-034-11	s	RESISTOR,ADJ,CERMET 2K
RV401	1-237-034-11	s	RESISTOR,ADJ,CERMET 2K
RV501	1-237-034-11	s	RESISTOR,ADJ,CERMET 2K
RV601	1-237-034-11	s	RESISTOR,ADJ,CERMET 2K

(AU-249 BOARD)

Ref. No. or Q'ty	Part No.	SP	Description
S1	1-692-270-41	s	SWITCH, SLIDE

CP-344 BOARD

Ref. No. or Q'ty	Part No.	SP	Description
1pc	A-8322-898-A	o	MOUNTED CIRCUIT BOARD, CP-344
9pcs	4-352-844-01	o	PIN, LEAD, COATING
C100	1-163-133-00	s	CAPACITOR,CHIP CERAMIC 470PF
C101	1-163-133-00	s	CAPACITOR,CHIP CERAMIC 470PF
C103	1-163-133-00	s	CAPACITOR,CHIP CERAMIC 470PF
C104	1-163-133-00	s	CAPACITOR,CHIP CERAMIC 470PF
C105	1-107-909-11	s	CAPACITOR,ELECT 47MF/50V
C106	1-107-909-11	s	CAPACITOR,ELECT 47MF/50V
C107	1-163-243-11	s	CAPACITOR CHIP CERAMIC 47PF/50
C108	1-163-243-11	s	CAPACITOR CHIP CERAMIC 47PF/50
C109	1-126-405-11	s	CAPACITOR,ELECT 10MF/50V(CHIP
C142	1-115-154-11	s	CAPACITOR ELECT 10MF/16V(BP)
C145	1-163-251-11	s	CAPACITOR CERAMIC 100PF/50V
C146	1-115-154-11	s	CAPACITOR ELECT 10MF/16V(BP)
C147	1-107-823-11	s	CAPACITOR,CERAMIC 0.47MF/16V
C149	1-163-251-11	s	CAPACITOR CERAMIC 100PF/50V
C161	1-163-243-11	s	CAPACITOR CHIP CERAMIC 47PF/50
C163	1-107-823-11	s	CAPACITOR,CERAMIC 0.47MF/16V
C164	1-107-823-11	s	CAPACITOR,CERAMIC 0.47MF/16V
C166	1-163-243-11	s	CAPACITOR CHIP CERAMIC 47PF/50
C200	1-163-133-00	s	CAPACITOR,CHIP CERAMIC 470PF
C201	1-163-133-00	s	CAPACITOR,CHIP CERAMIC 470PF
C203	1-163-133-00	s	CAPACITOR,CHIP CERAMIC 470PF
C204	1-163-133-00	s	CAPACITOR,CHIP CERAMIC 470PF
C205	1-107-909-11	s	CAPACITOR,ELECT 47MF/50V
C206	1-107-909-11	s	CAPACITOR,ELECT 47MF/50V
C207	1 163 243 11	s	CAPACITOR CHIP CERAMIC 47PF/50
C208	1-163-243-11	s	CAPACITOR CHIP CERAMIC 47PF/50
C209	1-126-405-11	s	CAPACITOR,ELECT 10MF/50V(CHIP
C242	1-115-154-11	s	CAPACITOR ELECT 10MF/16V(BP)
C245	1-163-251-11	s	CAPACITOR CERAMIC 100PF/50V
C246	1-115-154-11	s	CAPACITOR ELECT 10MF/16V(BP)
C247	1-107-823-11	s	CAPACITOR,CERAMIC 0.47MF/16V
C249	1-163-251-11	s	CAPACITOR CERAMIC 100PF/50V
C261	1-163-243-11	s	CAPACITOR CHIP CERAMIC 47PF/50
C263	1-107-823-11	s	CAPACITOR,CERAMIC 0.47MF/16V
C264	1-107-823-11	s	CAPACITOR,CERAMIC 0.47MF/16V
C266	1-163-243-11	s	CAPACITOR CHIP CERAMIC 47PF/50
C300	1-163-037-11	s	CAPACITOR,CHIP CERAMIC 0.022MF
C301	1-163-037-11	s	CAPACITOR,CHIP CERAMIC 0.022MF
C302	1-115-581-11	s	CAPACITOR CHIP ELECT 100MF/16V
C303	1-115-581-11	s	CAPACITOR CHIP ELECT 100MF/16V
C304	1-115-581-11	s	CAPACITOR CHIP ELECT 100MF/16V
C305	1-115-581-11	s	CAPACITOR CHIP ELECT 100MF/16V
C400	1-163-243-11	s	CAPACITOR CHIP CERAMIC 47PF/50
C401	1-163-243-11	s	CAPACITOR CHIP CERAMIC 47PF/50
C402	1-163-251-11	s	CAPACITOR CERAMIC 100PF/50V
C403	1-104-653-11	s	CAPACITOR ELECT 220MF/16V(105)
C404	1-104-653-11	s	CAPACITOR ELECT 220MF/16V(105)
C500	1-163-243-11	s	CAPACITOR CHIP CERAMIC 47PF/50
C501	1-163-243-11	s	CAPACITOR CHIP CERAMIC 47PF/50
C502	1-163-251-11	s	CAPACITOR CERAMIC 100PF/50V
C503	1-104-653-11	s	CAPACITOR ELECT 220MF/16V(105)
C504	1-104-653-11	s	CAPACITOR ELECT 220MF/16V(105)
C600	1-128-526-11	s	CAPACITOR ERECT 100MF/25V(105C
C601	1-128-526-11	s	CAPACITOR ERECT 100MF/25V(105C
C700	1-163-243-11	s	CAPACITOR CHIP CERAMIC 47PF/50
C701	1-163-243-11	s	CAPACITOR CHIP CERAMIC 47PF/50

(CP-344 BOARD)

Ref. No. or Q'ty	Part No.	SP	Description
C702	1-163-251-11	s	CAPACITOR CERAMIC 100PF/50V
C703	1-104-653-11	s	CAPACITOR ELECT 220MF/16V(105)
C704	1-104-653-11	s	CAPACITOR ELECT 220MF/16V(105)
C800	1-163-243-11	s	CAPACITOR CHIP CERAMIC 47PF/50
C801	1-163-243-11	s	CAPACITOR CHIP CERAMIC 47PF/50
C802	1-163-251-11	s	CAPACITOR CERAMIC 100PF/50V
C803	1-104-653-11	s	CAPACITOR ELECT 220MF/16V(105)
C804	1-104-653-11	s	CAPACITOR ELECT 220MF/16V(105)
CN1	1-580-789-21	o	PIN,CONNECTOR (SMD)
CN2	1-580-057-11	o	PIN,CONNECTOR 4P
CN100	1-750-786-21	s	CONNECTOR (XLR TYPE) 3P
CN400	1-750-785-21	s	CONNECTOR (XLR TYPE) 3P
CN600	1-573-290-21	s	PIN, CONNECTOR (4P)(SMD)1.5MM
CN601	1-766-383-11	o	PIN, CONNECTOR (12P)(SMD)1.5MM
CN700	1-750-785-21	s	CONNECTOR (XLR TYPE) 3P
D100	8-719-404-35	s	DIODE MA141WK
D101	8-719-024-81	s	DIODE 1SS300-TE85L
D200	8-719-404-35	s	DIODE MA141WK
D201	8-719-024-81	s	DIODE 1SS300-TE85L
D400	8-719-404-35	s	DIODE MA141WK
D401	8-719-024-81	s	DIODE 1SS300-TE85L
D500	8-719-404-35	s	DIODE MA141WK
D501	8-719-024-81	s	DIODE 1SS300-TE85L
D700	8-719-404-35	s	DIODE MA141WK
D701	8-719-024-81	s	DIODE 1SS300-TE85L
D800	8 719 404 35	s	DIODE MA141WK
D801	8-719-024-81	s	DIODE 1SS300-TE85L
FL400	1-239-895-11	s	FILTER, EMI (SMD)
FL401	1-239-895-11	s	FILTER, EMI (SMD)
FL500	1-239-895-11	s	FILTER, EMI (SMD)
FL501	1-239-895-11	s	FILTER, EMI (SMD)
FL700	1-239-895-11	s	FILTER, EMI (SMD)
FL701	1-239-895-11	s	FILTER, EMI (SMD)
FL800	1-239-895-11	s	FILTER, EMI (SMD)
FL801	1-239-895-11	s	FILTER, EMI (SMD)
IC100	8-759-711-85	s	IC NJM4580E-D
IC101	8-759-711-85	s	IC NJM4580E-D
IC142	8-759-588-04	s	IC SSM2018TS-REEL
IC145	8-759-598-35	s	IC NJM2119M(TE2)
IC200	8-759-711-85	s	IC NJM4580E-D
IC201	8-759-711-85	s	IC NJM4580E-D
IC242	8-759-588-04	s	IC SSM2018TS-REEL
IC245	8-759-598-35	s	IC NJM2119M(TE2)
IC400	8-759-711-85	s	IC NJM4580E-D
IC401	8-759-158-99	s	IC SSM-2142P
IC501	8-759-158-99	s	IC SSM-2142P
IC700	8-759-711-85	s	IC NJM4580E-D
IC701	8-759-158-99	s	IC SSM-2142P
IC801	8-759-158-99	s	IC SSM-2142P
L100	1-412-184-11	s	MICRO INDUCTOR 8.2UH
L101	1-412-184-11	s	MICRO INDUCTOR 8.2UH
L200	1-412-184-11	s	MICRO INDUCTOR 8.2UH
L201	1-412-184-11	s	MICRO INDUCTOR 8.2UH
Q100	8-729-271-31	s	TRANSISTOR 2SC2713-G
Q200	8-729-271-31	s	TRANSISTOR 2SC2713-G
Q300	8-729-020-93	s	TRANSISTOR 2SC2982C-TE12L
Q301	8-729-106-60	s	TRANSISTOR 2SB1115A

(CP-344 BOARD)

Ref. No. or Q'ty	Part No.	SP	Description
Q400	8-729-013-37	s	TRANSISTOR 2SC4213-AB-TE85L
Q500	8-729-013-37	s	TRANSISTOR 2SC4213-AB-TE85L
Q700	8-729-013-37	s	TRANSISTOR 2SC4213-AB-TE85L
Q800	8-729-013-37	s	TRANSISTOR 2SC4213-AB-TE85L
R101	1-216-295-91	s	RESISTOR, CHIP 0 (1/10W)
R103	1-216-295-91	s	RESISTOR, CHIP 0 (1/10W)
R104	1-220-751-11	s	RESISTOR,METAL FILM CHIP 2.2K
R105	1-220-386-11	s	RESISTOR,METAL FILM CHIP 3.6K
R106	1-220-751-11	s	RESISTOR,METAL FILM CHIP 2.2K
R107	1-220-386-11	s	RESISTOR,METAL FILM CHIP 3.6K
R108	1-220-751-11	s	RESISTOR,METAL FILM CHIP 2.2K
R109	1-216-648-11	s	RESISTOR,CHIP 750 1/10W (2012)
R110	1-220-751-11	s	RESISTOR,METAL FILM CHIP 2.2K
R111	1-216-648-11	s	RESISTOR,CHIP 750 1/10W (2012)
R112	1-220-751-11	s	RESISTOR,METAL FILM CHIP 2.2K
R113	1-220-751-11	s	RESISTOR,METAL FILM CHIP 2.2K
R114	1-216-640-11	s	RESISTOR CHIP 160 1/10W (2012)
R115	1-216-634-11	s	RESISTOR,CHIP 200 1/10W(2012)
R116	1-216-637-11	s	RESISTOR CHIP 270 1/10W (2012)
R117	1-216-637-11	s	RESISTOR CHIP 270 1/10W (2012)
R118	1-216-663-11	s	RESISTOR,CHIP 3.3K 1/10W(2012)
R119	1-216-675-11	s	RESISTOR CHIP 10K 1/10W(2012)
R120	1-216-675-11	s	RESISTOR CHIP 10K 1/10W(2012)
R121	1-216-631-11	s	RESISTOR,CHIP 150 1/10W (2012)
R122	1-220-751-11	s	RESISTOR,METAL FILM CHIP 2.2K
R123	1-220-751-11	s	RESISTOR,METAL FILM CHIP 2.2K
R124	1 216 685 11	s	RESISTOR,CHIP 27K 1/10W(2012)
R127	1-216-638-11	s	RESISTOR,CHIP 300 1/10W (2012)
R131	1-218-366-11	s	RESISTOR,METAL CHIP 3300 1/10W
R132	1-218-367-11	s	RESISTOR,METAL FILM CHIP 10K
R133	1-218-366-11	s	RESISTOR,METAL CHIP 3300 1/10W
R134	1-218-367-11	s	RESISTOR,METAL FILM CHIP 10K
R135	1-216-295-91	s	RESISTOR,CHIP 0 (1/10W)
R143	1-216-681-11	s	RESISTOR CHIP 18K 1/10W (2012)
R147	1-216-667-11	s	RESISTOR,CHIP 4.7K 1/10W(2012)
R148	1-216-689-11	s	RESISTOR,CHIP 39K 1/10W(2012)
R149	1-216-651-11	s	RESISTOR,CHIP 1K 1/10W(2012)
R150	1-216-643-11	s	RESISTOR CHIP 470 1/10W (2012)
R151	1-216-627-11	s	RESISTOR,CHIP 100 1/10W (2012)
R153	1-216-663-11	s	RESISTOR,CHIP 3.3K 1/10W(2012)
R154	1-216-659-11	s	RESISTOR,CHIP 2.2K 1/10W(2012)
R155	1-216-663-11	s	RESISTOR,CHIP 3.3K 1/10W(2012)
R159	1-216-295-91	s	RESISTOR,CHIP 0 (1/10W)
R161	1-216-699-11	s	RESISTOR,CHIP 100K 1/10W(2012)
R162	1-216-683-11	s	RESISTOR CHIP 22K 1/10W (2012)
R163	1-216-670-11	s	RESISTOR,CHIP 6.2K 1/10W(2012)
R164	1-218-754-11	s	RESISTOR METAL CHIP 120K(2012)
R201	1-216-295-91	s	RESISTOR,CHIP 0 (1/10W)
R203	1-216-295-91	s	RESISTOR,CHIP 0 (1/10W)
R204	1-220-751-11	s	RESISTOR,METAL FILM CHIP 2.2K
R205	1-220-386-11	s	RESISTOR,METAL FILM CHIP 3.6K
R206	1-220-751-11	s	RESISTOR,METAL FILM CHIP 2.2K
R207	1-220-386-11	s	RESISTOR,METAL FILM CHIP 3.6K
R208	1-220-751-11	s	RESISTOR,METAL FILM CHIP 2.2K
R209	1-216-648-11	s	RESISTOR,CHIP 750 1/10W (2012)
R210	1-220-751-11	s	RESISTOR,METAL FILM CHIP 2.2K
R211	1-216-648-11	s	RESISTOR,CHIP 750 1/10W (2012)
R212	1-220-751-11	s	RESISTOR,METAL FILM CHIP 2.2K
R213	1-220-751-11	s	RESISTOR,METAL FILM CHIP 2.2K

(CP-344 BOARD)

Ref. No. or Q'ty	Part No.	SP	Description
R214	1-216-640-11	s	RESISTOR CHIP 160 1/10W (2012)
R215	1-216-634-11	s	RESISTOR,CHIP 200 1/10W(2012)
R216	1-216-637-11	s	RESISTOR CHIP 270 1/10W (2012)
R217	1-216-637-11	s	RESISTOR CHIP 270 1/10W (2012)
R218	1-216-663-11	s	RESISTOR,CHIP 3.3K 1/10W(2012)
R219	1-216-675-11	s	RESISTOR CHIP 10K 1/10W(2012)
R220	1-216-675-11	s	RESISTOR CHIP 10K 1/10W(2012)
R221	1-216-631-11	s	RESISTOR,CHIP 150 1/10W (2012)
R222	1-220-751-11	s	RESISTOR,METAL FILM CHIP 2.2K
R223	1-220-751-11	s	RESISTOR,METAL FILM CHIP 2.2K
R224	1-216-685-11	s	RESISTOR,CHIP 27K 1/10W(2012)
R227	1-216-638-11	s	RESISTOR,CHIP 300 1/10W (2012)
R231	1-218-366-11	s	RESISTOR,METAL CHIP 3300 1/10W
R232	1-218-367-11	s	RESISTOR,METAL FILM CHIP 10K
R233	1-218-366-11	s	RESISTOR,METAL CHIP 3300 1/10W
R234	1-218-367-11	s	RESISTOR,METAL FILM CHIP 10K
R235	1-216-295-91	s	RESISTOR,CHIP 0 (1/10W)
R243	1-216-681-11	s	RESISTOR CHIP 18K 1/10W (2012)
R247	1-216-667-11	s	RESISTOR,CHIP 4.7K 1/10W(2012)
R248	1-216-689-11	s	RESISTOR,CHIP 39K 1/10W(2012)
R249	1-216-651-11	s	RESISTOR,CHIP 1K 1/10W(2012)
R250	1-216-643-11	s	RESISTOR CHIP 470 1/10W (2012)
R251	1-216-627-11	s	RESISTOR,CHIP 100 1/10W (2012)
R253	1-216-663-11	s	RESISTOR,CHIP 3.3K 1/10W(2012)
R254	1-216-659-11	s	RESISTOR,CHIP 2.2K 1/10W(2012)
R255	1-216-663-11	s	RESISTOR,CHIP 3.3K 1/10W(2012)
R259	1 216 295 91	s	RESISTOR,CHIP 0 (1/10W)
R261	1-216-699-11	s	RESISTOR,CHIP 100K 1/10W(2012)
R262	1-216-683-11	s	RESISTOR CHIP 22K 1/10W (2012)
R263	1-216-670-11	s	RESISTOR,CHIP 6.2K 1/10W(2012)
R264	1-218-754-11	s	RESISTOR METAL CHIP 120K(2012)
R300	1-216-653-11	s	RESISTOR CHIP 1.2K 1/10W(2012)
R301	1-216-653-11	s	RESISTOR CHIP 1.2K 1/10W(2012)
R400	1-216-672-11	s	RESISTOR,CHIP 7.5K 1/10W(2012)
R401	1-216-672-11	s	RESISTOR,CHIP 7.5K 1/10W(2012)
R402	1-216-686-11	s	RESISTOR,METAL FILM 30K 1/10W
R403	1-216-686-11	s	RESISTOR,METAL FILM 30K 1/10W
R404	1-216-675-11	s	RESISTOR CHIP 10K 1/10W(2012)
R405	1-216-675-11	s	RESISTOR CHIP 10K 1/10W(2012)
R407	1-216-295-91	s	RESISTOR,CHIP 0 (1/10W)
R408	1-216-295-91	s	RESISTOR,CHIP 0 (1/10W)
R410	1-216-675-11	s	RESISTOR CHIP 10K 1/10W(2012)
R411	1-216-699-11	s	RESISTOR,CHIP 100K 1/10W(2012)
R500	1-216-672-11	s	RESISTOR,CHIP 7.5K 1/10W(2012)
R501	1-216-672-11	s	RESISTOR,CHIP 7.5K 1/10W(2012)
R502	1-216-686-11	s	RESISTOR,METAL FILM 30K 1/10W
R503	1-216-686-11	s	RESISTOR,METAL FILM 30K 1/10W
R504	1-216-675-11	s	RESISTOR CHIP 10K 1/10W(2012)
R505	1-216-675-11	s	RESISTOR CHIP 10K 1/10W(2012)
R507	1-216-295-91	s	RESISTOR,CHIP 0 (1/10W)
R508	1-216-295-91	s	RESISTOR,CHIP 0 (1/10W)
R510	1-216-675-11	s	RESISTOR CHIP 10K 1/10W(2012)
R700	1-216-672-11	s	RESISTOR,CHIP 7.5K 1/10W(2012)
R701	1-216-672-11	s	RESISTOR,CHIP 7.5K 1/10W(2012)
R702	1-216-686-11	s	RESISTOR,METAL FILM 30K 1/10W
R703	1-216-686-11	s	RESISTOR,METAL FILM 30K 1/10W
R704	1-216-675-11	s	RESISTOR CHIP 10K 1/10W(2012)
R705	1-216-675-11	s	RESISTOR CHIP 10K 1/10W(2012)
R707	1-216-295-91	s	RESISTOR,CHIP 0 (1/10W)

(CP-344 BOARD)

Ref. No. or Q'ty	Part No.	SP	Description
R708	1-216-295-91	s	RESISTOR,CHIP 0 (1/10W)
R710	1-216-675-11	s	RESISTOR CHIP 10K 1/10W(2012)
R800	1-216-672-11	s	RESISTOR,CHIP 7.5K 1/10W(2012)
R801	1-216-672-11	s	RESISTOR,CHIP 7.5K 1/10W(2012)
R802	1-216-686-11	s	RESISTOR,METAL FILM 30K 1/10W
R803	1-216-686-11	s	RESISTOR,METAL FILM 30K 1/10W
R804	1-216-675-11	s	RESISTOR CHIP 10K 1/10W(2012)
R805	1-216-675-11	s	RESISTOR CHIP 10K 1/10W(2012)
R807	1-216-295-91	s	RESISTOR,CHIP 0 (1/10W)
R808	1-216-295-91	s	RESISTOR,CHIP 0 (1/10W)
R810	1-216-675-11	s	RESISTOR CHIP 10K 1/10W(2012)
RV141	1-241-260-11	s	RESISTOR ADJ 500 (CERMET)
RV241	1-241-260-11	s	RESISTOR ADJ 500 (CERMET)
S100	1-572-042-11	s	SWITCH,SLIDE (2-4-3)
S101	1-570-157-51	s	SWITCH,SLIDE (1-1-3)
S200	1-572-042-11	s	SWITCH,SLIDE (2-4-3)
S201	1-570-157-51	s	SWITCH,SLIDE (1-1-3)
TH141	1-810-106-11	s	THERMISTOR, POSITIVE LINEAR
TH241	1-810-106-11	s	THERMISTOR, POSITIVE LINEAR

CP-344A BOARD

Ref. No. or Q'ty	Part No.	SP	Description
1pc	A-8323-001-A	o	MOUNTED CIRCUIT BOARD, CP-344A
9pcs	4-352-844-01	o	PIN, LEAD, COATING
C101	1-163-133-00	s	CAPACITOR,CHIP CERAMIC 470PF
C102	1-163-133-00	s	CAPACITOR,CHIP CERAMIC 470PF
C103	1-163-133-00	s	CAPACITOR,CHIP CERAMIC 470PF
C104	1-163-133-00	s	CAPACITOR,CHIP CERAMIC 470PF
C105	1-107-909-11	s	CAPACITOR,ELECT 47MF/50V
C106	1-107-909-11	s	CAPACITOR,ELECT 47MF/50V
C107	1-163-243-11	s	CAPACITOR CHIP CERAMIC 47PF/50
C108	1-163-243-11	s	CAPACITOR CHIP CERAMIC 47PF/50
C142	1-115-154-11	s	CAPACITOR ELECT 10MF/16V(BP)
C145	1-163-251-11	s	CAPACITOR CERAMIC 100PF/50V
C146	1-115-154-11	s	CAPACITOR ELECT 10MF/16V(BP)
C147	1-107-823-11	s	CAPACITOR,CERAMIC 0.47MF/16V
C149	1-163-251-11	s	CAPACITOR CERAMIC 100PF/50V
C161	1-163-243-11	s	CAPACITOR CHIP CERAMIC 47PF/50
C163	1-107-823-11	s	CAPACITOR,CERAMIC 0.47MF/16V
C164	1-107-823-11	s	CAPACITOR,CERAMIC 0.47MF/16V
C166	1-163-243-11	s	CAPACITOR CHIP CERAMIC 47PF/50
C201	1-163-133-00	s	CAPACITOR,CHIP CERAMIC 470PF
C202	1-163-133-00	s	CAPACITOR,CHIP CERAMIC 470PF
C203	1-163-133-00	s	CAPACITOR,CHIP CERAMIC 470PF
C204	1-163-133-00	s	CAPACITOR,CHIP CERAMIC 470PF
C205	1-107-909-11	s	CAPACITOR,ELECT 47MF/50V
C206	1-107-909-11	s	CAPACITOR,ELECT 47MF/50V
C207	1-163-243-11	s	CAPACITOR CHIP CERAMIC 47PF/50
C208	1 163 243 11	s	CAPACITOR CHIP CERAMIC 47PF/50
C242	1-115-154-11	s	CAPACITOR ELECT 10MF/16V(BP)
C245	1-163-251-11	s	CAPACITOR CERAMIC 100PF/50V
C246	1-115-154-11	s	CAPACITOR ELECT 10MF/16V(BP)
C247	1-107-823-11	s	CAPACITOR,CERAMIC 0.47MF/16V
C249	1-163-251-11	s	CAPACITOR CERAMIC 100PF/50V
C261	1-163-243-11	s	CAPACITOR CHIP CERAMIC 47PF/50
C263	1-107-823-11	s	CAPACITOR,CERAMIC 0.47MF/16V
C264	1-107-823-11	s	CAPACITOR,CERAMIC 0.47MF/16V
C266	1-163-243-11	s	CAPACITOR CHIP CERAMIC 47PF/50
C300	1-163-037-11	s	CAPACITOR,CHIP CERAMIC 0.022MF
C301	1-163-037-11	s	CAPACITOR,CHIP CERAMIC 0.022MF
C302	1-115-581-11	s	CAPACITOR CHIP ELECT 100MF/16V
C303	1-115-581-11	s	CAPACITOR CHIP ELECT 100MF/16V
C304	1-115-581-11	s	CAPACITOR CHIP ELECT 100MF/16V
C305	1-115-581-11	s	CAPACITOR CHIP ELECT 100MF/16V
C400	1-163-243-11	s	CAPACITOR CHIP CERAMIC 47PF/50
C401	1-163-243-11	s	CAPACITOR CHIP CERAMIC 47PF/50
C402	1-163-251-11	s	CAPACITOR CERAMIC 100PF/50V
C403	1-104-653-11	s	CAPACITOR ELECT 220MF/16V(105)
C404	1-104-653-11	s	CAPACITOR ELECT 220MF/16V(105)
C500	1-163-243-11	s	CAPACITOR CHIP CERAMIC 47PF/50
C501	1-163-243-11	s	CAPACITOR CHIP CERAMIC 47PF/50
C502	1-163-251-11	s	CAPACITOR CERAMIC 100PF/50V
C503	1-104-653-11	s	CAPACITOR ELECT 220MF/16V(105)
C504	1-104-653-11	s	CAPACITOR ELECT 220MF/16V(105)
C600	1-128-526-11	s	CAPACITOR ERECT 100MF/25V(105C
C601	1-128-526-11	s	CAPACITOR ERECT 100MF/25V(105C
C700	1-163-243-11	s	CAPACITOR CHIP CERAMIC 47PF/50
C701	1-163-243-11	s	CAPACITOR CHIP CERAMIC 47PF/50
C702	1-163-251-11	s	CAPACITOR CERAMIC 100PF/50V
C703	1-104-653-11	s	CAPACITOR ELECT 220MF/16V(105)

(CP-344A BOARD)

Ref. No. or Q'ty	Part No.	SP	Description
C704	1-104-653-11	s	CAPACITOR ELECT 220MF/16V(105)
C800	1-163-243-11	s	CAPACITOR CHIP CERAMIC 47PF/50
C801	1-163-243-11	s	CAPACITOR CHIP CERAMIC 47PF/50
C802	1-163-251-11	s	CAPACITOR CERAMIC 100PF/50V
C803	1-104-653-11	s	CAPACITOR ELECT 220MF/16V(105)
C804	1-104-653-11	s	CAPACITOR ELECT 220MF/16V(105)
CN1	1-580-789-21	o	PIN,CONNECTOR (SMD)
CN2	1-580-057-11	o	PIN,CONNECTOR 4P
CN100	1-750-785-21	s	CONNECTOR (XLR TYPE) 3P
CN400	1-750-786-21	s	CONNECTOR (XLR TYPE) 3P
CN600	1-573-290-21	s	PIN, CONNECTOR (4P)(SMD)1.5MM
CN601	1-766-383-11	o	PIN, CONNECTOR (12P)(SMD)1.5MM
CN700	1-750-786-21	s	CONNECTOR (XLR TYPE) 3P
D100	8-719-404-35	s	DIODE MA141WK
D101	8-719-024-81	s	DIODE 1SS300-TE85L
D200	8-719-404-35	s	DIODE MA141WK
D201	8-719-024-81	s	DIODE 1SS300-TE85L
D400	8-719-404-35	s	DIODE MA141WK
D401	8-719-024-81	s	DIODE 1SS300-TE85L
D500	8-719-404-35	s	DIODE MA141WK
D501	8-719-024-81	s	DIODE 1SS300-TE85L
D700	8-719-404-35	s	DIODE MA141WK
D701	8-719-024-81	s	DIODE 1SS300-TE85L
D800	8-719-404-35	s	DIODE MA141WK
D801	8-719-024-81	s	DIODE 1SS300-TE85L
FL400	1-239-895-11	s	FILTER, EMI (SMD)
FL401	1-239-895-11	s	FILTER, EMI (SMD)
FL500	1-239-895-11	s	FILTER, EMI (SMD)
FL501	1-239-895-11	s	FILTER, EMI (SMD)
FL700	1-239-895-11	s	FILTER, EMI (SMD)
FL701	1-239-895-11	s	FILTER, EMI (SMD)
FL800	1-239-895-11	s	FILTER, EMI (SMD)
FL801	1-239-895-11	s	FILTER, EMI (SMD)
IC100	8-759-711-85	s	IC NJM4580E-D
IC101	8-759-711-85	s	IC NJM4580E-D
IC142	8-759-588-04	s	IC SSM2018TS-REEL
IC145	8-759-598-35	s	IC NJM2119M(TE2)
IC200	8-759-711-85	s	IC NJM4580E-D
IC201	8-759-711-85	s	IC NJM4580E-D
IC242	8-759-588-04	s	IC SSM2018TS-REEL
IC245	8-759-598-35	s	IC NJM2119M(TE2)
IC400	8-759-711-85	s	IC NJM4580E-D
IC401	8-759-158-99	s	IC SSM-2142P
IC501	8-759-158-99	s	IC SSM-2142P
IC700	8-759-711-85	s	IC NJM4580E-D
IC701	8-759-158-99	s	IC SSM-2142P
IC801	8-759-158-99	s	IC SSM-2142P
L100	1-412-184-11	s	MICRO INDUCTOR 8.2UH
L101	1-412-184-11	s	MICRO INDUCTOR 8.2UH
L200	1-412-184-11	s	MICRO INDUCTOR 8.2UH
L201	1-412-184-11	s	MICRO INDUCTOR 8.2UH
Q300	8-729-020-93	s	TRANSISTOR 2SC2982C-TE12L
Q301	8-729-106-60	s	TRANSISTOR 2SB1115A
Q400	8-729-013-37	s	TRANSISTOR 2SC4213-AB-TE85L
Q500	8-729-013-37	s	TRANSISTOR 2SC4213-AB-TE85L
Q700	8-729-013-37	s	TRANSISTOR 2SC4213-AB-TE85L

(CP-344A BOARD)

Ref. No. or Q'ty	Part No.	SP	Description
Q800	8-729-013-37	s	TRANSISTOR 2SC4213-AB-TE85L
R100	1-216-295-91	s	RESISTOR, CHIP 0 (1/10W)
R102	1-216-295-91	s	RESISTOR, CHIP 0 (1/10W)
R104	1-220-751-11	s	RESISTOR,METAL FILM CHIP 2.2K
R105	1-220-386-11	s	RESISTOR,METAL FILM CHIP 3.6K
R106	1-220-751-11	s	RESISTOR,METAL FILM CHIP 2.2K
R107	1-220-386-11	s	RESISTOR,METAL FILM CHIP 3.6K
R108	1-220-751-11	s	RESISTOR,METAL FILM CHIP 2.2K
R109	1-216-648-11	s	RESISTOR,CHIP 750 1/10W (2012)
R110	1-220-751-11	s	RESISTOR,METAL FILM CHIP 2.2K
R111	1-216-648-11	s	RESISTOR,CHIP 750 1/10W (2012)
R112	1-220-751-11	s	RESISTOR,METAL FILM CHIP 2.2K
R113	1-220-751-11	s	RESISTOR,METAL FILM CHIP 2.2K
R114	1-216-640-11	s	RESISTOR CHIP 160 1/10W (2012)
R115	1-216-634-11	s	RESISTOR,CHIP 200 1/10W(2012)
R116	1-216-637-11	s	RESISTOR CHIP 270 1/10W (2012)
R117	1-216-637-11	s	RESISTOR CHIP 270 1/10W (2012)
R118	1-216-663-11	s	RESISTOR,CHIP 3.3K 1/10W(2012)
R119	1-216-675-11	s	RESISTOR CHIP 10K 1/10W(2012)
R120	1-216-675-11	s	RESISTOR CHIP 10K 1/10W(2012)
R121	1-216-631-11	s	RESISTOR,CHIP 150 1/10W (2012)
R122	1-220-751-11	s	RESISTOR,METAL FILM CHIP 2.2K
R123	1-220-751-11	s	RESISTOR,METAL FILM CHIP 2.2K
R127	1-216-638-11	s	RESISTOR,CHIP 300 1/10W (2012)
R131	1-218-366-11	s	RESISTOR,METAL CHIP 3300 1/10W
R132	1-218-367-11	s	RESISTOR,METAL FILM CHIP 10K
R133	1-218-366-11	s	RESISTOR,METAL CHIP 3300 1/10W
R134	1-218-367-11	s	RESISTOR,METAL FILM CHIP 10K
R135	1-216-295-91	s	RESISTOR,CHIP 0 (1/10W)
R143	1-216-681-11	s	RESISTOR CHIP 18K 1/10W (2012)
R147	1-216-667-11	s	RESISTOR,CHIP 4.7K 1/10W(2012)
R148	1-216-689-11	s	RESISTOR,CHIP 39K 1/10W(2012)
R149	1-216-651-11	s	RESISTOR,CHIP 1K 1/10W(2012)
R150	1-216-643-11	s	RESISTOR CHIP 470 1/10W (2012)
R151	1-216-627-11	s	RESISTOR,CHIP 100 1/10W (2012)
R153	1-216-663-11	s	RESISTOR,CHIP 3.3K 1/10W(2012)
R154	1-216-659-11	s	RESISTOR,CHIP 2.2K 1/10W(2012)
R155	1-216-663-11	s	RESISTOR,CHIP 3.3K 1/10W(2012)
R159	1-216-295-91	s	RESISTOR,CHIP 0 (1/10W)
R161	1-216-699-11	s	RESISTOR,CHIP 100K 1/10W(2012)
R162	1-216-683-11	s	RESISTOR CHIP 22K 1/10W (2012)
R163	1-216-670-11	s	RESISTOR,CHIP 6.2K 1/10W(2012)
R164	1-218-754-11	s	RESISTOR METAL CHIP 120K(2012)
R200	1-216-295-91	s	RESISTOR,CHIP 0 (1/10W)
R202	1-216-295-91	s	RESISTOR,CHIP 0 (1/10W)
R204	1-220-751-11	s	RESISTOR,METAL FILM CHIP 2.2K
R205	1-220-386-11	s	RESISTOR,METAL FILM CHIP 3.6K
R206	1-220-751-11	s	RESISTOR,METAL FILM CHIP 2.2K
R207	1-220-386-11	s	RESISTOR,METAL FILM CHIP 3.6K
R208	1-220-751-11	s	RESISTOR,METAL FILM CHIP 2.2K
R209	1-216-648-11	s	RESISTOR,CHIP 750 1/10W (2012)
R210	1-220-751-11	s	RESISTOR,METAL FILM CHIP 2.2K
R211	1-216-648-11	s	RESISTOR,CHIP 750 1/10W (2012)
R212	1-220-751-11	s	RESISTOR,METAL FILM CHIP 2.2K
R213	1-220-751-11	s	RESISTOR,METAL FILM CHIP 2.2K
R214	1-216-640-11	s	RESISTOR CHIP 160 1/10W (2012)
R215	1-216-634-11	s	RESISTOR,CHIP 200 1/10W(2012)
R216	1-216-637-11	s	RESISTOR CHIP 270 1/10W (2012)

http://getMANUAL.com

(CP-344A BOARD)

Ref. No. or Q'ty	Part No.	SP	Description
R217	1-216-637-11	s	RESISTOR CHIP 270 1/10W (2012)
R218	1-216-663-11	s	RESISTOR,CHIP 3.3K 1/10W(2012)
R219	1-216-675-11	s	RESISTOR CHIP 10K 1/10W(2012)
R220	1-216-675-11	s	RESISTOR CHIP 10K 1/10W(2012)
R221	1-216-631-11	s	RESISTOR,CHIP 150 1/10W (2012)
R222	1-220-751-11	s	RESISTOR,METAL FILM CHIP 2.2K
R223	1-220-751-11	s	RESISTOR,METAL FILM CHIP 2.2K
R227	1-216-638-11	s	RESISTOR,CHIP 300 1/10W (2012)
R231	1-218-366-11	s	RESISTOR,METAL CHIP 3300 1/10W
R232	1-218-367-11	s	RESISTOR,METAL FILM CHIP 10K
R233	1-218-366-11	s	RESISTOR,METAL CHIP 3300 1/10W
R234	1-218-367-11	s	RESISTOR,METAL FILM CHIP 10K
R235	1-216-295-91	s	RESISTOR,CHIP 0 (1/10W)
R243	1-216-681-11	s	RESISTOR CHIP 18K 1/10W (2012)
R247	1-216-667-11	s	RESISTOR,CHIP 4.7K 1/10W(2012)
R248	1-216-689-11	s	RESISTOR,CHIP 39K 1/10W(2012)
R249	1-216-651-11	s	RESISTOR,CHIP 1K 1/10W(2012)
R250	1-216-643-11	s	RESISTOR CHIP 470 1/10W (2012)
R251	1-216-627-11	s	RESISTOR,CHIP 100 1/10W (2012)
R253	1-216-663-11	s	RESISTOR,CHIP 3.3K 1/10W(2012)
R254	1-216-659-11	s	RESISTOR,CHIP 2.2K 1/10W(2012)
R255	1-216-663-11	s	RESISTOR,CHIP 3.3K 1/10W(2012)
R259	1-216-295-91	s	RESISTOR,CHIP 0 (1/10W)
R261	1-216-699-11	s	RESISTOR,CHIP 100K 1/10W(2012)
R262	1-216-683-11	s	RESISTOR CHIP 22K 1/10W (2012)
R263	1-216-670-11	s	RESISTOR,CHIP 6.2K 1/10W(2012)
R264	1-218-754-11	s	RESISTOR METAL CHIP 120K(2012)
R300	1-216-653-11	s	RESISTOR CHIP 1.2K 1/10W(2012)
R301	1-216-653-11	s	RESISTOR CHIP 1.2K 1/10W(2012)
R400	1-216-672-11	s	RESISTOR,CHIP 7.5K 1/10W(2012)
R401	1-216-672-11	s	RESISTOR,CHIP 7.5K 1/10W(2012)
R402	1-216-686-11	s	RESISTOR,METAL FILM 30K 1/10W
R403	1-216-686-11	s	RESISTOR,METAL FILM 30K 1/10W
R404	1-216-675-11	s	RESISTOR CHIP 10K 1/10W(2012)
R405	1-216-675-11	s	RESISTOR CHIP 10K 1/10W(2012)
R406	1-216-295-91	s	RESISTOR,CHIP 0 (1/10W)
R409	1-216-295-91	s	RESISTOR,CHIP 0 (1/10W)
R410	1-216-675-11	s	RESISTOR CHIP 10K 1/10W(2012)
R411	1-216-699-11	s	RESISTOR,CHIP 100K 1/10W(2012)
R500	1-216-672-11	s	RESISTOR,CHIP 7.5K 1/10W(2012)
R501	1-216-672-11	s	RESISTOR,CHIP 7.5K 1/10W(2012)
R502	1-216-686-11	s	RESISTOR,METAL FILM 30K 1/10W
R503	1-216-686-11	s	RESISTOR,METAL FILM 30K 1/10W
R504	1-216-675-11	s	RESISTOR CHIP 10K 1/10W(2012)
R505	1-216-675-11	s	RESISTOR CHIP 10K 1/10W(2012)
R506	1-216-295-91	s	RESISTOR,CHIP 0 (1/10W)
R509	1-216-295-91	s	RESISTOR,CHIP 0 (1/10W)
R510	1-216-675-11	s	RESISTOR CHIP 10K 1/10W(2012)
R700	1-216-672-11	s	RESISTOR,CHIP 7.5K 1/10W(2012)
R701	1-216-672-11	s	RESISTOR,CHIP 7.5K 1/10W(2012)
R702	1-216-686-11	s	RESISTOR,METAL FILM 30K 1/10W
R703	1-216-686-11	s	RESISTOR,METAL FILM 30K 1/10W
R704	1-216-675-11	s	RESISTOR CHIP 10K 1/10W(2012)
R705	1-216-675-11	s	RESISTOR CHIP 10K 1/10W(2012)
R706	1-216-295-91	s	RESISTOR,CHIP 0 (1/10W)
R709	1-216-295-91	s	RESISTOR,CHIP 0 (1/10W)
R710	1-216-675-11	s	RESISTOR CHIP 10K 1/10W(2012)
R800	1-216-672-11	s	RESISTOR,CHIP 7.5K 1/10W(2012)
R801	1-216-672-11	s	RESISTOR,CHIP 7.5K 1/10W(2012)

(CP-344A BOARD)

Ref. No. or Q'ty	Part No.	SP	Description
R802	1-216-686-11	s	RESISTOR,METAL FILM 30K 1/10W
R803	1-216-686-11	s	RESISTOR,METAL FILM 30K 1/10W
R804	1-216-675-11	s	RESISTOR CHIP 10K 1/10W(2012)
R805	1-216-675-11	s	RESISTOR CHIP 10K 1/10W(2012)
R806	1-216-295-91	s	RESISTOR,CHIP 0 (1/10W)
R809	1-216-295-91	s	RESISTOR,CHIP 0 (1/10W)
R810	1-216-675-11	s	RESISTOR CHIP 10K 1/10W(2012)
RV141	1-241-260-11	s	RESISTOR ADJ 500 (CERMET)
RV241	1-241-260-11	s	RESISTOR ADJ 500 (CERMET)
S100	1-572-042-11	s	SWITCH,SLIDE (2-4-3)
S200	1-572-042-11	s	SWITCH,SLIDE (2-4-3)
TH141	1-810-106-11	s	THERMISTOR, POSITIVE LINEAR
TH241	1-810-106-11	s	THERMISTOR, POSITIVE LINEAR

CP-354 BOARD

Ref. No. or Q'ty	Part No.	SP	Description
1pc	A-8323-195-A	o	MOUNTED CIRCUIT BOARD, CP-354
1pc	1-500-371-11	o	CORE (D-SUB)
4pcs	4-352-844-01	o	PIN, LEAD, COATING
C100	1-117-372-11	s	CAP,ELECT (SMD) 100MF/10V
C101	1-117-372-11	s	CAP,ELECT (SMD) 100MF/10V
C102	1-164-004-11	s	CAPACITOR,CERAMIC 0.1MF/25V
C103	1-164-004-11	s	CAPACITOR,CERAMIC 0.1MF/25V
C104	1-117-372-11	s	CAP,ELECT (SMD) 100MF/10V
C105	1-117-372-11	s	CAP,ELECT (SMD) 100MF/10V
C106	1-163-229-11	s	CAPACITOR CHIP 12PF/50V(2125)
C200	1-164-004-11	s	CAPACITOR,CERAMIC 0.1MF/25V
C201	1-110-501-11	s	CAPACITOR CERAMIC 0.33MF/16V
C202	1-110-501-11	s	CAPACITOR CERAMIC 0.33MF/16V
C203	1-163-275-11	s	CAPACITOR CERAMIC 1000PF/50V
C204	1-163-235-11	s	CAPACITOR,CHIP CERAMIC 22PF/50
C205	1-126-390-11	s	CAPACITOR ELECT 22MF/6.3V(105)
C206	1-126-390-11	s	CAPACITOR ELECT 22MF/6.3V(105)
C207	1-110-569-11	s	CAPACITOR CHIP TANTAL47MF/6.3V
C208	1-164-004-11	s	CAPACITOR,CERAMIC 0.1MF/25V
C600	1-163-011-11	s	CAPACITOR,CHIP CERAMIC 1500PF
C601	1-164-004-11	s	CAPACITOR,CERAMIC 0.1MF/25V
C604	1-126-397-11	s	CAPACITOR ELECT 33MF/25V(CHIP)
C605	1-163-017-00	s	CAPACITOR,CHIP CERAMIC 4700PF
C606	1-126-397-11	s	CAPACITOR ELECT 33MF/25V(CHIP)
C607	1-115-339-11	s	CAPACITOR CERAMIC 0.1MF/50V
C608	1-163-037-11	s	CAPACITOR,CHIP CERAMIC 0.022MF
C609	1 115 339 11	s	CAPACITOR CERAMIC 0.1MF/50V
C610	1-163-037-11	s	CAPACITOR,CHIP CERAMIC 0.022MF
CN1	1-564-719-11	o	PIN,CONNECTOR (3P)
CN2	1-564-718-11	o	PIN,CONNECTOR (2P)
CN3	1-564-013-31	s	CONNECTOR PIN 3P
CN4	1-564-013-31	s	CONNECTOR PIN 3P
CN100	1-573-584-11	s	CONNECTOR, BNC (RECEPTACLE)
CN101	1-573-584-11	s	CONNECTOR, BNC (RECEPTACLE)
CN200	1-766-788-11	s	CONNECTOR, COAXIAL (BNC TYPE)
CN301	1-568-676-11	o	CONNECTOR, D-SUB 9P
CN700	1-695-223-21	o	PIN,CONNECTOR (SMD) 10P
CN701	1-764-007-11	o	PIN,CONNECTOR (SMD) 12P
CN702	1-580-056-21	o	PIN,CONNECTOR 3P
D100	8-719-820-41	s	DIODE 1SS302
D101	8-719-820-41	s	DIODE 1SS302
D102	8-719-820-41	s	DIODE 1SS302
D103	8-719-820-41	s	DIODE 1SS302
D200	8-719-820-41	s	DIODE 1SS302
D201	8-719-105-28	s	DIODE RD2.4M-B
D202	8-719-820-41	s	DIODE 1SS302
D203	8-719-105-28	s	DIODE RD2.4M-B
D204	8-719-820-41	s	DIODE 1SS302
D600	8-719-048-17	s	DIODE MBRS130LT3
D601	8-719-820-41	s	DIODE 1SS302
FL100	1-239-895-11	s	FILTER, EMI (SMD)
FL101	1-239-896-12	s	FILTER, EMI (SMD)
FL102	1-239-896-12	s	FILTER, EMI (SMD)
FL103	1-239-896-12	s	FILTER, EMI (SMD)
FL200	1-239-895-11	s	FILTER, EMI (SMD)
FL201	1-239-895-11	s	FILTER, EMI (SMD)

(CP-354 BOARD)

Ref. No. or Q'ty	Part No.	SP	Description
IC100	8-759-392-64	s	IC AD828AR
IC200	8-759-441-31	s	IC MC14053BDTR2
IC201	8-759-369-73	s	IC NJM4556AM
IC202	8-759-173-16	s	IC TL062CPW
IC600	8-759-521-35	s	IC TL5001CD
IC602	8-729-040-75	s	TRANSISTOR SI4953DY
IC604	8-759-035-87	s	IC SC7S00F
IC605	8-759-523-97	s	IC TC74VHC123AFT(EL)
L600	1-409-722-11	s	COIL, CHOKE 220UH
PS600	⚠ 1-533-282-21	s	CIRCUIT PROTECTOR 2A (3225)
Q600	8-729-117-32	s	TRANSISTOR 2SC4177
Q601	8-729-140-63	s	TRANSISTOR 2SA1611-M5M6
Q603	8-729-029-14	s	TRANSISTOR DTC144EUA-T106
Q604	8-729-029-14	s	TRANSISTOR DTC144EUA-T106
R100	1-216-624-11	s	RESISTOR,CHIP 75 1/10W(2012)
R101	1-216-624-11	s	RESISTOR,CHIP 75 1/10W(2012)
R106	1-216-679-11	s	RESISTOR CHIP 15K 1/10W (2012)
R107	1-216-679-11	s	RESISTOR CHIP 15K 1/10W (2012)
R108	1-216-611-11	s	RESISTOR,CHIP 22 1/10W (2012)
R109	1-216-611-11	s	RESISTOR,CHIP 22 1/10W (2012)
R110	1-216-611-11	s	RESISTOR,CHIP 22 1/10W (2012)
R111	1-216-611-11	s	RESISTOR,CHIP 22 1/10W (2012)
R112	1-216-651-11	s	RESISTOR,CHIP 1K 1/10W(2012)
R113	1-216-650-11	s	RESISTOR,CHIP 910 1/10W(2012)
R114	1 216 627 11	s	RESISTOR,CHIP 100 1/10W (2012)
R115	1-216-619-11	s	RESISTOR CHIP 47 1/10W(2012)
R116	1-216-624-11	s	RESISTOR,CHIP 75 1/10W(2012)
R200	1-216-295-91	s	RESISTOR,CHIP 0 (1/10W)
R202	1-216-699-11	s	RESISTOR,CHIP 100K 1/10W(2012)
R203	1-216-699-11	s	RESISTOR,CHIP 100K 1/10W(2012)
R204	1-216-679-11	s	RESISTOR CHIP 15K 1/10W (2012)
R205	1-216-689-11	s	RESISTOR,CHIP 39K 1/10W(2012)
R206	1-216-685-11	s	RESISTOR,CHIP 27K 1/10W(2012)
R207	1-216-687-11	s	RESISTOR CHIP 33K 1/10W (2012)
R208	1-216-699-11	s	RESISTOR,CHIP 100K 1/10W(2012)
R209	1-216-699-11	s	RESISTOR,CHIP 100K 1/10W(2012)
R210	1-216-685-11	s	RESISTOR,CHIP 27K 1/10W(2012)
R211	1-218-760-11	s	RESISTOR,CHIP 220K 1/10W(2012)
R212	1-216-691-11	s	RESISTOR CHIP 47K 1/10W(2012)
R213	1-216-662-11	s	RESISTOR,CHIP 3K 1/10W (2012)
R214	1-216-651-11	s	RESISTOR,CHIP 1K 1/10W(2012)
R215	1-218-776-11	s	RESISTOR CHIP 1M 1/10W (2012)
R216	1-216-627-11	s	RESISTOR,CHIP 100 1/10W (2012)
R217	1-216-627-11	s	RESISTOR,CHIP 100 1/10W (2012)
R218	1-216-655-11	s	RESISTOR,CHIP 1.5K 1/10W(2012)
R219	1-216-603-11	s	RESISTOR,CHIP 10 1/10W(2012)
R220	1-216-691-11	s	RESISTOR CHIP 47K 1/10W(2012)
R221	1-216-624-11	s	RESISTOR,CHIP 75 1/10W(2012)
R223	1-216-295-91	s	RESISTOR,CHIP 0 (1/10W)
R224	1-216-685-11	s	RESISTOR,CHIP 27K 1/10W(2012)
R300	1-216-295-91	s	RESISTOR,CHIP 0 (1/10W)
R600	1-216-691-11	s	RESISTOR CHIP 47K 1/10W(2012)
R601	1-216-667-11	s	RESISTOR,CHIP 4.7K 1/10W(2012)
R602	1-216-295-91	s	RESISTOR,CHIP 0 (1/10W)
R603	1-216-679-11	s	RESISTOR CHIP 15K 1/10W (2012)
R604	1-216-699-11	s	RESISTOR,CHIP 100K 1/10W(2012)
R605	1-216-699-11	s	RESISTOR,CHIP 100K 1/10W(2012)

(CP-354 BOARD)

Ref. No. or Q'ty	Part No.	SP	Description
R611	1-216-675-11	s	RESISTOR CHIP 10K 1/10W(2012)
R613	1-216-619-11	s	RESISTOR CHIP 47 1/10W(2012)
R614	1-216-651-11	s	RESISTOR,CHIP 1K 1/10W(2012)
R619	1-216-691-11	s	RESISTOR CHIP 47K 1/10W(2012)
R621	1-216-697-91	s	RESISTOR CHIP METAL OXIDE 82K
R622	1-216-627-11	s	RESISTOR,CHIP 100 1/10W (2012)
R623	1-216-697-91	s	RESISTOR CHIP METAL OXIDE 82K
R626	1-216-691-11	s	RESISTOR CHIP 47K 1/10W(2012)
R627	1-216-295-91	s	RESISTOR,CHIP 0 (1/10W)
R632	1-216-295-91	s	RESISTOR,CHIP 0 (1/10W)
R633	1-216-295-91	s	RESISTOR,CHIP 0 (1/10W)
R634	1-216-675-11	s	RESISTOR CHIP 10K 1/10W(2012)
R635	1-216-295-91	s	RESISTOR,CHIP 0 (1/10W)
S100	1-570-157-51	s	SWITCH,SLIDE (1-1-3)
S101	1-570-157-51	s	SWITCH,SLIDE (1-1-3)

CT-209 BOARD

Ref. No. or Q'ty	Part No.	SP	Description
1pc	A-8322-969-A	o	MOUNTED CIRCUIT BOARD, CT-209
CN5	1-580-057-11	o	PIN,CONNECTOR 4P
EN1	1-475-568-11	s	ENCODER, ROTARY

DC-97 BOARD

Ref. No. or Q'ty	Part No.	SP	Description
1pc	A-8318-279-B	o	MOUNTED CIRCUIT BOARD, DC-97
8pcs	1-562-260-11	o	CONTACT,SOCKET
1pc	1-580-696-11	o	HOUSING, CONNECTOR 9P
CN1	1-564-603-11	s	CONNECTOR(WITH DC SW) 4P
CN2	1-568-622-11	o	PIN, SIL 2P
FL1	1-117-193-11	s	CAPACITOR,3 TERMINAL 1.5MF/50V
FL2	1-117-193-11	s	CAPACITOR,3 TERMINAL 1.5MF/50V

DEC-97 BOARD

Ref. No. or Q'ty	Part No.	SP	Description
1pc	A-8316-704-A	o	MOUNTED CIRCUIT BOARD, DEC-97
5pcs	3-729-061-01	s	SCREW (M2X4.5) (TYPE 1)(STEEL)
2pcs	3-603-737-01	o	LEVER,BOARD
C1	1-107-826-11	s	CAPACITOR,CHIP CERAMIC 0.1MF
C2	1-107-826-11	s	CAPACITOR,CHIP CERAMIC 0.1MF
C3	1-107-826-11	s	CAPACITOR,CHIP CERAMIC 0.1MF
C5	1-162-921-11	s	CAPACITOR,CERAMIC 33PF/50V CH
C7	1-113-991-11	s	CAPACITOR TANTALUM 33MF/16V
C8	1-162-910-11	s	CAPACITOR,CERAMIC 5PF/50V 1608
C9	1-113-991-11	s	CAPACITOR TANTALUM 33MF/16V
C10	1-162-908-11	s	CAPACITOR,CERAMIC 3PF/50V 1608
C13	1-107-689-21	s	CAPACITOR TANTALUM 1MF/35V
C14	1-107-686-11	s	CAPACITOR,CHIP ELECT 4.7MF/16V
C15	1-162-927-11	s	CAPACITOR,CERAMIC 100PF/50V CH
C16	1-162-923-11	s	CAPACITOR,CERAMIC 47PF/50V CH
C17	1-107-826-11	s	CAPACITOR,CHIP CERAMIC 0.1MF
C18	1-107-826-11	s	CAPACITOR,CHIP CERAMIC 0.1MF
C19	1-107-826-11	s	CAPACITOR,CHIP CERAMIC 0.1MF
C20	1-107-826-11	s	CAPACITOR,CHIP CERAMIC 0.1MF
C21	1-107-826-11	s	CAPACITOR,CHIP CERAMIC 0.1MF
C22	1-107-826-11	s	CAPACITOR,CHIP CERAMIC 0.1MF
C24	1-107-826-11	s	CAPACITOR,CHIP CERAMIC 0.1MF
C25	1-107-826-11	s	CAPACITOR,CHIP CERAMIC 0.1MF
C26	1-107-826-11	s	CAPACITOR,CHIP CERAMIC 0.1MF
C27	1-162-923-11	s	CAPACITOR,CERAMIC 47PF/50V CH
C28	1-107-826-11	s	CAPACITOR,CHIP CERAMIC 0.1MF
C29	1 107 826 11	s	CAPACITOR,CHIP CERAMIC 0.1MF
C30	1-113-991-11	s	CAPACITOR TANTALUM 33MF/16V
C31	1-162-921-11	s	CAPACITOR,CERAMIC 33PF/50V CH
C32	1-164-230-11	s	CAPACITOR,CERAMIC 220PF/50V
C33	1-107-826-11	s	CAPACITOR,CHIP CERAMIC 0.1MF
C34	1-107-826-11	s	CAPACITOR,CHIP CERAMIC 0.1MF
C35	1-107-826-11	s	CAPACITOR,CHIP CERAMIC 0.1MF
C36	1-107-826-11	s	CAPACITOR,CHIP CERAMIC 0.1MF
C39	1-107-826-11	s	CAPACITOR,CHIP CERAMIC 0.1MF
C40	1-107-826-11	s	CAPACITOR,CHIP CERAMIC 0.1MF
C41	1-115-416-11	s	CAPACITOR,CERAMIC 1000PF/25V
C42	1-115-416-11	s	CAPACITOR,CERAMIC 1000PF/25V
C43	1-107-826-11	s	CAPACITOR,CHIP CERAMIC 0.1MF
C44	1-162-927-11	s	CAPACITOR,CERAMIC 100PF/50V CH
C45	1-115-416-11	s	CAPACITOR,CERAMIC 1000PF/25V
C46	1-107-826-11	s	CAPACITOR,CHIP CERAMIC 0.1MF
C47	1-107-826-11	s	CAPACITOR,CHIP CERAMIC 0.1MF
C48	1-107-826-11	s	CAPACITOR,CHIP CERAMIC 0.1MF
C49	1-107-826-11	s	CAPACITOR,CHIP CERAMIC 0.1MF
C51	1-113-991-11	s	CAPACITOR TANTALUM 33MF/16V
C52	1-107-826-11	s	CAPACITOR,CHIP CERAMIC 0.1MF
C53	1-113-991-11	s	CAPACITOR TANTALUM 33MF/16V
C54	1-107-826-11	s	CAPACITOR,CHIP CERAMIC 0.1MF
C55	1-162-921-11	s	CAPACITOR,CERAMIC 33PF/50V CH
C56	1-164-230-11	s	CAPACITOR,CERAMIC 220PF/50V
C57	1-107-826-11	s	CAPACITOR,CHIP CERAMIC 0.1MF
C58	1-107-826-11	s	CAPACITOR,CHIP CERAMIC 0.1MF
C59	1-107-826-11	s	CAPACITOR,CHIP CERAMIC 0.1MF
C60	1-164-315-11	s	CAPACITOR,CERAMIC 470PF/50V CH
C61	1-115-416-11	s	CAPACITOR,CERAMIC 1000PF/25V
C62	1-164-315-11	s	CAPACITOR,CERAMIC 470PF/50V CH
C63	1-162-927-11	s	CAPACITOR,CERAMIC 100PF/50V CH

(DEC-97 BOARD)

Ref. No. or Q'ty	Part No.	SP	Description
C64	1-164-230-11	s	CAPACITOR,CERAMIC 220PF/50V
C65	1-164-230-11	s	CAPACITOR,CERAMIC 220PF/50V
C66	1-107-826-11	s	CAPACITOR,CHIP CERAMIC 0.1MF
C67	1-107-826-11	s	CAPACITOR,CHIP CERAMIC 0.1MF
C68	1-162-927-11	s	CAPACITOR,CERAMIC 100PF/50V CH
C69	1-107-826-11	s	CAPACITOR,CHIP CERAMIC 0.1MF
C70	1-107-826-11	s	CAPACITOR,CHIP CERAMIC 0.1MF
C71	1-107-826-11	s	CAPACITOR,CHIP CERAMIC 0.1MF
C72	1-115-416-11	s	CAPACITOR,CERAMIC 1000PF/25V
C73	1-162-970-11	s	CAPACITOR CERAMIC 0.01MF/25V B
C74	1-113-991-11	s	CAPACITOR TANTALUM 33MF/16V
C75	1-164-217-11	s	CAPACITOR,CERAMIC 150PF/50V CH
C76	1-107-826-11	s	CAPACITOR,CHIP CERAMIC 0.1MF
C77	1-162-970-11	s	CAPACITOR CERAMIC 0.01MF/25V B
C78	1-107-826-11	s	CAPACITOR,CHIP CERAMIC 0.1MF
C79	1-107-826-11	s	CAPACITOR,CHIP CERAMIC 0.1MF
C80	1-107-826-11	s	CAPACITOR,CHIP CERAMIC 0.1MF
C81	1-115-416-11	s	CAPACITOR,CERAMIC 1000PF/25V
C82	1-107-826-11	s	CAPACITOR,CHIP CERAMIC 0.1MF
C83	1-107-826-11	s	CAPACITOR,CHIP CERAMIC 0.1MF
C84	1-107-826-11	s	CAPACITOR,CHIP CERAMIC 0.1MF
C85	1-107-826-11	s	CAPACITOR,CHIP CERAMIC 0.1MF
C86	1-107-826-11	s	CAPACITOR,CHIP CERAMIC 0.1MF
C87	1-115-169-11	s	CAPACITOR,TANTAL (SMD) 10MF
C88	1-107-826-11	s	CAPACITOR,CHIP CERAMIC 0.1MF
C89	1-107-826-11	s	CAPACITOR,CHIP CERAMIC 0.1MF
C90	1 107 826 11	s	CAPACITOR,CHIP CERAMIC 0.1MF
C91	1-107-826-11	s	CAPACITOR,CHIP CERAMIC 0.1MF
C92	1-107-826-11	s	CAPACITOR,CHIP CERAMIC 0.1MF
C93	1-113-991-11	s	CAPACITOR TANTALUM 33MF/16V
C94	1-107-826-11	s	CAPACITOR,CHIP CERAMIC 0.1MF
C95	1-104-913-11	s	CAPACITOR,CHIP TANTAL 10MF/16V
C96	1-107-826-11	s	CAPACITOR,CHIP CERAMIC 0.1MF
C97	1-107-826-11	s	CAPACITOR,CHIP CERAMIC 0.1MF
C98	1-113-991-11	s	CAPACITOR TANTALUM 33MF/16V
C99	1-107-826-11	s	CAPACITOR,CHIP CERAMIC 0.1MF
C100	1-117-373-11	s	CAPACITOR, (SMD) 150MF/6.3V
C101	1-107-826-11	s	CAPACITOR,CHIP CERAMIC 0.1MF
C102	1-107-826-11	s	CAPACITOR,CHIP CERAMIC 0.1MF
C103	1-107-826-11	s	CAPACITOR,CHIP CERAMIC 0.1MF
C104	1-107-826-11	s	CAPACITOR,CHIP CERAMIC 0.1MF
C105	1-113-991-11	s	CAPACITOR TANTALUM 33MF/16V
C106	1-107-826-11	s	CAPACITOR,CHIP CERAMIC 0.1MF
C107	1-113-991-11	s	CAPACITOR TANTALUM 33MF/16V
C108	1-107-826-11	s	CAPACITOR,CHIP CERAMIC 0.1MF
C109	1-107-826-11	s	CAPACITOR,CHIP CERAMIC 0.1MF
C110	1-107-826-11	s	CAPACITOR,CHIP CERAMIC 0.1MF
C111	1-107-826-11	s	CAPACITOR,CHIP CERAMIC 0.1MF
C112	1-162-927-11	s	CAPACITOR,CERAMIC 100PF/50V CH
C113	1-107-826-11	s	CAPACITOR,CHIP CERAMIC 0.1MF
C118	1-113-991-11	s	CAPACITOR TANTALUM 33MF/16V
C119	1-107-826-11	s	CAPACITOR,CHIP CERAMIC 0.1MF
C120	1-107-826-11	s	CAPACITOR,CHIP CERAMIC 0.1MF
C121	1-107-826-11	s	CAPACITOR,CHIP CERAMIC 0.1MF
C122	1-107-826-11	s	CAPACITOR,CHIP CERAMIC 0.1MF
C123	1-107-826-11	s	CAPACITOR,CHIP CERAMIC 0.1MF
C126	1-107-826-11	s	CAPACITOR,CHIP CERAMIC 0.1MF
C129	1-107-826-11	s	CAPACITOR,CHIP CERAMIC 0.1MF
C130	1-107-826-11	s	CAPACITOR,CHIP CERAMIC 0.1MF

(DEC-97 BOARD)

Ref. No. or Q'ty	Part No.	SP	Description
C131	1-107-826-11	s	CAPACITOR,CHIP CERAMIC 0.1MF
C132	1-107-826-11	s	CAPACITOR,CHIP CERAMIC 0.1MF
C133	1-107-826-11	s	CAPACITOR,CHIP CERAMIC 0.1MF
C135	1-107-826-11	s	CAPACITOR,CHIP CERAMIC 0.1MF
C136	1-113-991-11	s	CAPACITOR TANTALUM 33MF/16V
C138	1-107-826-11	s	CAPACITOR,CHIP CERAMIC 0.1MF
C139	1-107-826-11	s	CAPACITOR,CHIP CERAMIC 0.1MF
C140	1-107-826-11	s	CAPACITOR,CHIP CERAMIC 0.1MF
C141	1-107-826-11	s	CAPACITOR,CHIP CERAMIC 0.1MF
C142	1-162-970-11	s	CAPACITOR CERAMIC 0.01MF/25V B
C143	1-113-991-11	s	CAPACITOR TANTALUM 33MF/16V
C144	1-107-826-11	s	CAPACITOR,CHIP CERAMIC 0.1MF
C145	1-107-826-11	s	CAPACITOR,CHIP CERAMIC 0.1MF
C146	1-107-826-11	s	CAPACITOR,CHIP CERAMIC 0.1MF
C147	1-107-826-11	s	CAPACITOR,CHIP CERAMIC 0.1MF
C148	1-107-826-11	s	CAPACITOR,CHIP CERAMIC 0.1MF
C149	1-113-991-11	s	CAPACITOR TANTALUM 33MF/16V
C150	1-107-826-11	s	CAPACITOR,CHIP CERAMIC 0.1MF
C156	1-107-826-11	s	CAPACITOR,CHIP CERAMIC 0.1MF
C157	1-107-826-11	s	CAPACITOR,CHIP CERAMIC 0.1MF
C158	1-107-826-11	s	CAPACITOR,CHIP CERAMIC 0.1MF
C159	1-107-826-11	s	CAPACITOR,CHIP CERAMIC 0.1MF
C160	1-107-826-11	s	CAPACITOR,CHIP CERAMIC 0.1MF
C161	1-107-826-11	s	CAPACITOR,CHIP CERAMIC 0.1MF
C162	1-107-823-11	s	CAPACITOR,CERAMIC 0.47MF/16V
C163	1-107-823-11	s	CAPACITOR,CERAMIC 0.47MF/16V
C164	1 107 823 11	s	CAPACITOR,CERAMIC 0.47MF/16V
C165	1-107-823-11	s	CAPACITOR,CERAMIC 0.47MF/16V
C166	1-113-991-11	s	CAPACITOR TANTALUM 33MF/16V
C167	1-113-991-11	s	CAPACITOR TANTALUM 33MF/16V
C168	1-113-991-11	s	CAPACITOR TANTALUM 33MF/16V
C169	1-113-991-11	s	CAPACITOR TANTALUM 33MF/16V
C171	1-107-823-11	s	CAPACITOR,CERAMIC 0.47MF/16V
C172	1-113-991-11	s	CAPACITOR TANTALUM 33MF/16V
C173	1-107-826-11	s	CAPACITOR,CHIP CERAMIC 0.1MF
C174	1-107-826-11	s	CAPACITOR,CHIP CERAMIC 0.1MF
C175	1-107-826-11	s	CAPACITOR,CHIP CERAMIC 0.1MF
C176	1-107-826-11	s	CAPACITOR,CHIP CERAMIC 0.1MF
C177	1-107-826-11	s	CAPACITOR,CHIP CERAMIC 0.1MF
C178	1-107-826-11	s	CAPACITOR,CHIP CERAMIC 0.1MF
C179	1-107-826-11	s	CAPACITOR,CHIP CERAMIC 0.1MF
C180	1-107-826-11	s	CAPACITOR,CHIP CERAMIC 0.1MF
C181	1-107-826-11	s	CAPACITOR,CHIP CERAMIC 0.1MF
C182	1-107-826-11	s	CAPACITOR,CHIP CERAMIC 0.1MF
C183	1-107-826-11	s	CAPACITOR,CHIP CERAMIC 0.1MF
C184	1-107-826-11	s	CAPACITOR,CHIP CERAMIC 0.1MF
C185	1-107-826-11	s	CAPACITOR,CHIP CERAMIC 0.1MF
CN72	1-695-453-11	s	CONNECTOR,BOARD TO BOARD 50P
CP1	1-767-696-11	s	OSCILLATOR, CRYSTAL
CP2	1-767-618-11	s	OSCILLATOR, CRYSTAL
D2	8-719-941-23	s	DIODE DA204U
D3	8-719-941-23	s	DIODE DA204U
FB1	1-543-309-21	s	BEAD,FERRITE
FL1	1-234-262-21	s	FILTER, LOW PASS
IC1	8-759-700-95	s	IC NJM1496M

(DEC-97 BOARD)

Ref. No. or Q'ty	Part No.	SP	Description
IC2	8-759-271-86	s	IC TC7SH04FU
IC3	8-752-061-02	s	IC CXA1450M
IC4	8-759-098-16	s	IC LT1227CS8
IC5	8-759-441-31	s	IC MC14053BDTR2
IC6	8-759-262-03	s	IC MC14577CF
IC7	8-759-524-50	s	IC TC74VHC541FT(EL)
IC8	8-759-485-82	s	IC MC34182DR2
IC9	8-759-528-99	s	IC TC74VHC221AFT(EL)
IC10	8-759-523-95	s	IC TC74VHC74FT(EL)
IC11	8-759-058-64	s	IC TC7S32FU-TE85R
IC12	8-759-523-97	s	IC TC74VHC123AFT(EL)
IC13	8-759-485-82	s	IC MC34182DR2
IC14	8-759-242-64	s	IC TC4W53F
IC15	8-759-987-27	s	IC LM1881M
IC16	8-759-528-99	s	IC TC74VHC221AFT(EL)
IC17	8-759-528-99	s	IC TC74VHC221AFT(EL)
IC18	8-759-054-61	s	IC CLC505AJE
IC19	8-759-485-82	s	IC MC34182DR2
IC20	8-759-702-08	s	IC NJM360M
IC21	8-759-523-97	s	IC TC74VHC123AFT(EL)
IC22	8-759-485-82	s	IC MC34182DR2
IC23	8-759-702-08	s	IC NJM360M
IC24	8-759-058-64	s	IC TC7S32FU-TE85R
IC25	8-759-528-99	s	IC TC74VHC221AFT(EL)
IC26	8-759-524-18	s	IC TC74VHC163FT(EL)
IC27	8-759-524-18	s	IC TC74VHC163FT(EL)
IC28	8 759 523 95	s	IC TC74VHC74FT(EL)
IC29	8-759-233-66	s	IC TC74HCT04AF
IC30	8-759-234-77	s	IC TC4S66F
IC31	8-759-485-82	s	IC MC34182DR2
IC32	8-759-391-30	s	IC 74LVX3245QSCX
IC33	8-752-381-84	s	IC CXD1095BQ
IC34	8-759-251-40	s	IC MB88E346PFV-G-BND-ER
IC35	8-759-271-86	s	IC TC7SH04FU
IC36	8-759-710-88	s	IC NJM431U
IC37	8-759-173-16	s	IC TL062CPW
IC38	8-759-542-91	s	IC S-80840ANUP-ED4-T2
IC39	8-759-209-90	s	IC TC4S71F
IC40	8-752-376-32	s	IC CXD2310AR
IC41	8-752-360-44	s	IC CXK1203AR
IC42	8-752-375-22	s	IC CXD304-106Q
IC43	8-759-174-13	s	IC EPM7032LC44-15
IC44	8-729-047-61	s	TRANSISTOR SI4925DY-T1
IC45	8-759-173-16	s	IC TL062CPW
IC46	8-759-524-28	s	IC TC74VHC245FT(EL)
IC47	8-752-334-55	s	IC CXD1175AM
IC48	8-759-485-82	s	IC MC34182DR2
IC49	8-759-196-97	s	IC TC7SH32FU (TE85R)
IC50	8-759-524-28	s	IC TC74VHC245FT(EL)
IC51	8-759-524-28	s	IC TC74VHC245FT(EL)
IC52	8-729-045-28	s	TRANSISTOR SI4532DY-T1
IC53	8-729-045-28	s	TRANSISTOR SI4532DY-T1
IC54	8-759-196-97	s	IC TC7SH32FU (TE85R)
IC55	8-759-271-86	s	IC TC7SH04FU
IC56	8-729-045-28	s	TRANSISTOR SI4532DY-T1
IC57	8-759-196-96	s	IC TC7SH08FU (TE85R)
IC58	8-752-334-55	s	IC CXD1175AM
IC59	8-759-710-88	s	IC NJM431U

(DEC-97 BOARD)

Ref. No. or Q'ty	Part No.	SP	Description
L1	1-410-393-11	s	CHIP INDUCTOR 100UH (3225)
L2	1-410-393-11	s	CHIP INDUCTOR 100UH (3225)
L3	1-414-754-11	s	INDUCTOR 10.0UH
L4	1-414-754-11	s	INDUCTOR 10.0UH
L5	1-414-754-11	s	INDUCTOR 10.0UH
L6	1-414-754-11	s	INDUCTOR 10.0UH
L7	1-414-754-11	s	INDUCTOR 10.0UH
L8	1-414-754-11	s	INDUCTOR 10.0UH
L9	1-414-754-11	s	INDUCTOR 10.0UH
Q1	8-729-117-32	s	TRANSISTOR 2SC4177
Q2	8-729-117-32	s	TRANSISTOR 2SC4177
Q3	8-729-013-37	s	TRANSISTOR 2SC4213-AB-TE85L
Q4	8-729-143-07	s	TRANSISTOR 2SA1610-Y33
Q5	8-729-140-63	s	TRANSISTOR 2SA1611-M5M6
Q6	8-729-140-63	s	TRANSISTOR 2SA1611-M5M6
Q7	8-729-140-63	s	TRANSISTOR 2SA1611-M5M6
Q8	8-729-140-63	s	TRANSISTOR 2SA1611-M5M6
Q9	8-729-117-32	s	TRANSISTOR 2SC4177
Q10	8-729-140-63	s	TRANSISTOR 2SA1611-M5M6
Q11	8-729-140-63	s	TRANSISTOR 2SA1611-M5M6
Q12	8-729-143-07	s	TRANSISTOR 2SA1610-Y33
Q13	8-729-143-07	s	TRANSISTOR 2SA1610-Y33
Q14	8-729-118-56	s	FET 2SK852-X2
Q15	8-729-140-63	s	TRANSISTOR 2SA1611-M5M6
Q16	8-729-117-32	s	TRANSISTOR 2SC4177
Q17	8-729-140-63	s	TRANSISTOR 2SA1611-M5M6
Q18	8 729 904 41	s	TRANSISTOR FMY3
Q19	8-729-117-32	s	TRANSISTOR 2SC4177
Q20	8-729-117-32	s	TRANSISTOR 2SC4177
Q21	8-729-904-41	s	TRANSISTOR FMY3
Q22	8-729-029-14	s	TRANSISTOR DTC144EUA-T106
Q23	8-729-027-38	s	TRANSISTOR DTA144EAK-T146
Q24	8-729-029-14	s	TRANSISTOR DTC144EUA-T106
Q25	8-729-027-38	s	TRANSISTOR DTA144EAK-T146
Q26	8-729-029-14	s	TRANSISTOR DTC144EUA-T106
Q27	8-729-029-14	s	TRANSISTOR DTC144EUA-T106
Q28	8-729-029-14	s	TRANSISTOR DTC144EUA-T106
Q29	8-729-029-14	s	TRANSISTOR DTC144EUA-T106
Q30	8-729-029-14	s	TRANSISTOR DTC144EUA-T106
Q31	8-729-117-32	s	TRANSISTOR 2SC4177
R1	1-218-660-91	s	RESISTOR CHIP 47 1/16W (1608)
R2	1-218-668-11	s	RESISTOR,CHIP 100 1/16W (1608)
R3	1-218-732-11	s	RESISTOR,CHIP 47K 1/16W(1608)
R4	1-218-665-11	s	RESISTOR CHIP 75 1/16W (1608)
R5	1-218-700-11	s	RESISTOR,CHIP 2.2K 1/16W(1608)
R6	1-218-700-11	s	RESISTOR,CHIP 2.2K 1/16W(1608)
R7	1-218-672-11	s	RESISTOR,CHIP 150 1/16W(1608)
R8	1-218-740-11	s	RESISTOR,CHIP 100K 1/16W(1608)
R10	1-218-708-11	s	RESISTOR,CHIP 4.7K 1/16W(1608)
R11	1-218-708-11	s	RESISTOR,CHIP 4.7K 1/16W(1608)
R12	1-218-706-11	s	RESISTOR,CHIP 3.9K 1/16W(1608)
R13	1-218-706-11	s	RESISTOR,CHIP 3.9K 1/16W(1608)
R14	1-218-706-11	s	RESISTOR,CHIP 3.9K 1/16W(1608)
R15	1-218-668-11	s	RESISTOR,CHIP 100 1/16W (1608)
R16	1-218-692-11	s	RESISTOR,CHIP 1.0K 1/16W(1608)
R17	1-218-692-11	s	RESISTOR,CHIP 1.0K 1/16W(1608)
R18	1-218-708-11	s	RESISTOR,CHIP 4.7K 1/16W(1608)
R19	1-218-686-11	s	RESISTOR CHIP 560 1/16W (1608)

(DEC-97 BOARD)

Ref. No. or Q'ty	Part No.	SP	Description
R20	1-218-700-11	s	RESISTOR,CHIP 2.2K 1/16W(1608)
R22	1-218-710-11	s	RESISTOR,CHIP 5.6K 1/16W(1608)
R23	1-218-682-11	s	RESISTOR CHIP 390 1/16W (1608)
R24	1-218-728-11	s	RESISTOR,METAL 33K 1/16W
R25	1-216-864-11	s	RESISTOR,CHIP 0 1/16W (1608)
R26	1-218-700-11	s	RESISTOR,CHIP 2.2K 1/16W(1608)
R29	1-218-696-11	s	RESISTOR CHIP 1.5K 1/16W(1608)
R30	1-218-665-11	s	RESISTOR CHIP 75 1/16W (1608)
R32	1-218-660-91	s	RESISTOR CHIP 47 1/16W (1608)
R33	1-218-740-11	s	RESISTOR,CHIP 100K 1/16W(1608)
R34	1-218-676-11	s	RESISTOR,CHIP 220 1/16W(1608)
R35	1-218-692-11	s	RESISTOR,CHIP 1.0K 1/16W(1608)
R37	1-218-692-11	s	RESISTOR,CHIP 1.0K 1/16W(1608)
R38	1-218-692-11	s	RESISTOR,CHIP 1.0K 1/16W(1608)
R39	1-218-668-11	s	RESISTOR,CHIP 100 1/16W (1608)
R41	1-218-676-11	s	RESISTOR,CHIP 220 1/16W(1608)
R42	1-218-690-11	s	RESISTOR CHIP 820 1/16W (1608)
R43	1-218-708-11	s	RESISTOR,CHIP 4.7K 1/16W(1608)
R44	1-216-864-11	s	RESISTOR,CHIP 0 1/16W (1608)
R45	1-218-692-11	s	RESISTOR,CHIP 1.0K 1/16W(1608)
R46	1-218-711-11	s	RESISTOR,METAL 6.2K 1/16W
R47	1-218-692-11	s	RESISTOR,CHIP 1.0K 1/16W(1608)
R48	1-218-725-11	s	RESISTOR,CHIP 24K 1/16W(1608)
R49	1-218-692-11	s	RESISTOR,CHIP 1.0K 1/16W(1608)
R52	1-218-660-91	s	RESISTOR CHIP 47 1/16W (1608)
R53	1-218-716-11	s	RESISTOR,CHIP 10K 1/16W(1608)
R54	1 218 716 11	s	RESISTOR,CHIP 10K 1/16W(1608)
R55	1-218-690-11	s	RESISTOR CHIP 820 1/16W (1608)
R56	1-218-700-11	s	RESISTOR,CHIP 2.2K 1/16W(1608)
R58	1-216-855-11	s	RESISTOR,CHIP 680K 1/16W 1608
R59	1-218-692-11	s	RESISTOR,CHIP 1.0K 1/16W(1608)
R60	1-218-732-11	s	RESISTOR,CHIP 47K 1/16W(1608)
R61	1-218-702-11	s	RESISTOR CHIP 2.7K 1/16W(1608)
R62	1-218-702-11	s	RESISTOR CHIP 2.7K 1/16W(1608)
R63	1-218-708-11	s	RESISTOR,CHIP 4.7K 1/16W(1608)
R64	1-218-700-11	s	RESISTOR,CHIP 2.2K 1/16W(1608)
R65	1-218-716-11	s	RESISTOR,CHIP 10K 1/16W(1608)
R66	1-216-863-11	s	RESISTOR,CHIP 3.3M 1/16W 1608
R67	1-218-692-11	s	RESISTOR,CHIP 1.0K 1/16W(1608)
R68	1-218-740-11	s	RESISTOR,CHIP 100K 1/16W(1608)
R69	1-218-702-11	s	RESISTOR CHIP 2.7K 1/16W(1608)
R70	1-216-857-11	s	RESISTOR,CHIP 1.0M 1/16W 1608
R71	1-218-700-11	s	RESISTOR,CHIP 2.2K 1/16W(1608)
R72	1-218-716-11	s	RESISTOR,CHIP 10K 1/16W(1608)
R73	1-218-692-11	s	RESISTOR,CHIP 1.0K 1/16W(1608)
R74	1-218-692-11	s	RESISTOR,CHIP 1.0K 1/16W(1608)
R75	1-218-708-11	s	RESISTOR,CHIP 4.7K 1/16W(1608)
R76	1-218-708-11	s	RESISTOR,CHIP 4.7K 1/16W(1608)
R77	1-218-704-11	s	RESISTOR,CHIP 3.3K 1/16W(1608)
R78	1-218-692-11	s	RESISTOR,CHIP 1.0K 1/16W(1608)
R79	1-218-696-11	s	RESISTOR CHIP 1.5K 1/16W(1608)
R80	1-218-710-11	s	RESISTOR,CHIP 5.6K 1/16W(1608)
R81	1-218-712-11	s	RESISTOR,METAL 6.8K 1/16W
R82	1-218-668-11	s	RESISTOR,CHIP 100 1/16W (1608)
R83	1-218-714-11	s	RESISTOR,CHIP 8.2K 1/16W(1608)
R84	1-218-700-11	s	RESISTOR,CHIP 2.2K 1/16W(1608)
R85	1-218-676-11	s	RESISTOR,CHIP 220 1/16W(1608)
R86	1-218-712-11	s	RESISTOR,METAL 6.8K 1/16W
R87	1-218-711-11	s	RESISTOR,METAL 6.2K 1/16W

(DEC-97 BOARD)

Ref. No. or Q'ty	Part No.	SP	Description
R88	1-218-699-11	s	RESISTOR CHIP 2.0K 1/16W(1608)
R90	1-218-740-11	s	RESISTOR,CHIP 100K 1/16W(1608)
R91	1-218-698-11	s	RESISTOR,CHIP 1.8K 1/16W(1608)
R92	1-218-740-11	s	RESISTOR,CHIP 100K 1/16W(1608)
R93	1-218-740-11	s	RESISTOR,CHIP 100K 1/16W(1608)
R94	1-218-740-11	s	RESISTOR,CHIP 100K 1/16W(1608)
R95	1-218-740-11	s	RESISTOR,CHIP 100K 1/16W(1608)
R96	1-218-722-11	s	RESISTOR,CHIP 18K 1/16W 1608
R97	1-218-740-11	s	RESISTOR,CHIP 100K 1/16W(1608)
R100	1-218-740-11	s	RESISTOR,CHIP 100K 1/16W(1608)
R102	1-216-864-11	s	RESISTOR,CHIP 0 1/16W (1608)
R103	1-216-864-11	s	RESISTOR,CHIP 0 1/16W (1608)
R105	1-218-740-11	s	RESISTOR,CHIP 100K 1/16W(1608)
R108	1-218-740-11	s	RESISTOR,CHIP 100K 1/16W(1608)
R110	1-216-864-11	s	RESISTOR,CHIP 0 1/16W (1608)
R111	1-216-864-11	s	RESISTOR,CHIP 0 1/16W (1608)
R113	1-218-676-11	s	RESISTOR,CHIP 220 1/16W(1608)
R114	1-218-688-11	s	RESISTOR,CHIP 680 1/16W(1608)
R115	1-218-660-91	s	RESISTOR CHIP 47 1/16W (1608)
R116	1-218-698-11	s	RESISTOR,CHIP 1.8K 1/16W(1608)
R117	1-218-740-11	s	RESISTOR,CHIP 100K 1/16W(1608)
R118	1-218-740-11	s	RESISTOR,CHIP 100K 1/16W(1608)
R119	1-218-740-11	s	RESISTOR,CHIP 100K 1/16W(1608)
R120	1-218-716-11	s	RESISTOR,CHIP 10K 1/16W(1608)
R121	1-218-676-11	s	RESISTOR,CHIP 220 1/16W(1608)
R122	1-218-676-11	s	RESISTOR,CHIP 220 1/16W(1608)
R123	1 218 676 11	s	RESISTOR,CHIP 220 1/16W(1608)
R124	1-218-676-11	s	RESISTOR,CHIP 220 1/16W(1608)
R125	1-216-852-11	s	RESISTOR,CHIP 390K 1/16W 1608
R126	1-218-684-11	s	RESISTOR CHIP 470 1/16W (1608)
R127	1-218-713-11	s	RESISTOR,METAL 7.5K 1/16W
R128	1-218-716-11	s	RESISTOR,CHIP 10K 1/16W(1608)
R129	1-218-737-11	s	RESISTOR,METAL 75K 1/16
R130	1-218-728-11	s	RESISTOR,METAL 33K 1/16W
R131	1-218-726-11	s	RESISTOR CHIP 27K 1/16W (1608)
R132	1-218-716-11	s	RESISTOR,CHIP 10K 1/16W(1608)
R133	1-218-716-11	s	RESISTOR,CHIP 10K 1/16W(1608)
R134	1-218-716-11	s	RESISTOR,CHIP 10K 1/16W(1608)
R135	1-218-652-11	s	RESISTOR,CHIP 22 1/16W (1608)
R137	1-218-676-11	s	RESISTOR,CHIP 220 1/16W(1608)
R138	1-218-668-11	s	RESISTOR,CHIP 100 1/16W (1608)
R139	1-218-716-11	s	RESISTOR,CHIP 10K 1/16W(1608)
R140	1-218-716-11	s	RESISTOR,CHIP 10K 1/16W(1608)
R141	1-218-716-11	s	RESISTOR,CHIP 10K 1/16W(1608)
R142	1-218-716-11	s	RESISTOR,CHIP 10K 1/16W(1608)
R147	1-218-716-11	s	RESISTOR,CHIP 10K 1/16W(1608)
R148	1-218-740-11	s	RESISTOR,CHIP 100K 1/16W(1608)
R149	1-216-864-11	s	RESISTOR,CHIP 0 1/16W (1608)
R150	1-218-692-11	s	RESISTOR,CHIP 1.0K 1/16W(1608)
R151	1-218-711-11	s	RESISTOR,METAL 6.2K 1/16W
R152	1-218-660-91	s	RESISTOR CHIP 47 1/16W (1608)
R153	1-218-672-11	s	RESISTOR,CHIP 150 1/16W(1608)
R154	1-218-702-11	s	RESISTOR CHIP 2.7K 1/16W(1608)
R156	1-218-728-11	s	RESISTOR,METAL 33K 1/16W
R157	1-218-715-11	s	RESISTOR,METAL 9.1K 1/16W
R158	1-218-722-11	s	RESISTOR,CHIP 18K 1/16W 1608
R159	1-216-861-11	s	RESISTOR,CHIP 2.2M 1/16W 1608
R160	1-218-720-11	s	RESISTOR,CHIP 15K 1/16W(1608)
R161	1-218-716-11	s	RESISTOR,CHIP 10K 1/16W(1608)

(DEC-97 BOARD)

Ref. No. or Q'ty	Part No.	SP	Description
R162	1-218-692-11	s	RESISTOR,CHIP 1.0K 1/16W(1608)
R163	1-218-716-11	s	RESISTOR,CHIP 10K 1/16W(1608)
R164	1-218-718-11	s	RESISTOR CHIP 12K 1/16W (1608)
R165	1-218-728-11	s	RESISTOR,METAL 33K 1/16W
R166	1-218-692-11	s	RESISTOR,CHIP 1.0K 1/16W(1608)
R167	1-218-692-11	s	RESISTOR,CHIP 1.0K 1/16W(1608)
R168	1-218-692-11	s	RESISTOR,CHIP 1.0K 1/16W(1608)
R169	1-218-740-11	s	RESISTOR,CHIP 100K 1/16W(1608)
R170	1-218-672-11	s	RESISTOR,CHIP 150 1/16W(1608)
R171	1-218-672-11	s	RESISTOR,CHIP 150 1/16W(1608)
R172	1-218-672-11	s	RESISTOR,CHIP 150 1/16W(1608)
R173	1-218-672-11	s	RESISTOR,CHIP 150 1/16W(1608)
R174	1-218-660-91	s	RESISTOR CHIP 47 1/16W (1608)
R175	1-218-660-91	s	RESISTOR CHIP 47 1/16W (1608)
R176	1-218-660-91	s	RESISTOR CHIP 47 1/16W (1608)
R177	1-218-692-11	s	RESISTOR,CHIP 1.0K 1/16W(1608)
R178	1-218-692-11	s	RESISTOR,CHIP 1.0K 1/16W(1608)
R179	1-218-724-11	s	RESISTOR,CHIP 22K 1/16W(1608)
R180	1-218-728-11	s	RESISTOR,METAL 33K 1/16W
R181	1-218-732-11	s	RESISTOR,CHIP 47K 1/16W(1608)
R182	1-218-732-11	s	RESISTOR,CHIP 47K 1/16W(1608)
R183	1-218-729-11	s	RESISTOR,CHIP 36K 1/16W(1608)
R184	1-218-720-11	s	RESISTOR,CHIP 15K 1/16W(1608)
R199	1-218-668-11	s	RESISTOR,CHIP 100 1/16W (1608)
R200	1-218-668-11	s	RESISTOR,CHIP 100 1/16W (1608)
R201	1-218-668-11	s	RESISTOR,CHIP 100 1/16W (1608)
R202	1 218 668 11	s	RESISTOR,CHIP 100 1/16W (1608)
R203	1-218-668-11	s	RESISTOR,CHIP 100 1/16W (1608)
R204	1-218-668-11	s	RESISTOR,CHIP 100 1/16W (1608)
R205	1-218-668-11	s	RESISTOR,CHIP 100 1/16W (1608)
R206	1-218-668-11	s	RESISTOR,CHIP 100 1/16W (1608)
R207	1-218-668-11	s	RESISTOR,CHIP 100 1/16W (1608)
R208	1-218-668-11	s	RESISTOR,CHIP 100 1/16W (1608)
R209	1-218-668-11	s	RESISTOR,CHIP 100 1/16W (1608)
R210	1-218-668-11	s	RESISTOR,CHIP 100 1/16W (1608)
R211	1-218-668-11	s	RESISTOR,CHIP 100 1/16W (1608)
R212	1-218-668-11	s	RESISTOR,CHIP 100 1/16W (1608)
R213	1-218-668-11	s	RESISTOR,CHIP 100 1/16W (1608)
R214	1-218-692-11	s	RESISTOR,CHIP 1.0K 1/16W(1608)
R215	1-218-740-11	s	RESISTOR,CHIP 100K 1/16W(1608)
R216	1-218-740-11	s	RESISTOR,CHIP 100K 1/16W(1608)
R217	1-218-720-11	s	RESISTOR,CHIP 15K 1/16W(1608)
R218	1-218-720-11	s	RESISTOR,CHIP 15K 1/16W(1608)
R219	1-218-740-11	s	RESISTOR,CHIP 100K 1/16W(1608)
R220	1-218-740-11	s	RESISTOR,CHIP 100K 1/16W(1608)
R221	1-218-720-11	s	RESISTOR,CHIP 15K 1/16W(1608)
R222	1-218-720-11	s	RESISTOR,CHIP 15K 1/16W(1608)
R223	1-218-668-11	s	RESISTOR,CHIP 100 1/16W (1608)
R224	1-218-708-11	s	RESISTOR,CHIP 4.7K 1/16W(1608)
R225	1-218-660-91	s	RESISTOR CHIP 47 1/16W (1608)
R226	1-218-704-11	s	RESISTOR,CHIP 3.3K 1/16W(1608)
R227	1-218-740-11	s	RESISTOR,CHIP 100K 1/16W(1608)
R228	1-218-740-11	s	RESISTOR,CHIP 100K 1/16W(1608)
R229	1-218-720-11	s	RESISTOR,CHIP 15K 1/16W(1608)
R230	1-218-740-11	s	RESISTOR,CHIP 100K 1/16W(1608)
R231	1-218-740-11	s	RESISTOR,CHIP 100K 1/16W(1608)
R232	1-218-740-11	s	RESISTOR,CHIP 100K 1/16W(1608)
R233	1-218-740-11	s	RESISTOR,CHIP 100K 1/16W(1608)
R234	1-218-740-11	s	RESISTOR,CHIP 100K 1/16W(1608)

(DEC-97 BOARD)

Ref. No. or Q'ty	Part No.	SP	Description
R235	1-216-857-11	s	RESISTOR,CHIP 1.0M 1/16W 1608
R236	1-218-710-11	s	RESISTOR,CHIP 5.6K 1/16W(1608)
R237	1-218-704-11	s	RESISTOR,CHIP 3.3K 1/16W(1608)
R238	1-218-692-11	s	RESISTOR,CHIP 1.0K 1/16W(1608)
R239	1-218-728-11	s	RESISTOR,METAL 33K 1/16W
R240	1-218-716-11	s	RESISTOR,CHIP 10K 1/16W(1608)
R241	1-216-864-11	s	RESISTOR,CHIP 0 1/16W (1608)
R242	1-218-752-11	s	RESISTOR,CHIP 330K 1/16W(1608)
R243	1-218-692-11	s	RESISTOR,CHIP 1.0K 1/16W(1608)
R244	1-218-716-11	s	RESISTOR,CHIP 10K 1/16W(1608)
R245	1-218-726-11	s	RESISTOR CHIP 27K 1/16W (1608)
R246	1-218-728-11	s	RESISTOR,METAL 33K 1/16W
R247	1-218-740-11	s	RESISTOR,CHIP 100K 1/16W(1608)
R248	1-218-740-11	s	RESISTOR,CHIP 100K 1/16W(1608)
R252	1-218-726-11	s	RESISTOR CHIP 27K 1/16W (1608)
R254	1-218-696-11	s	RESISTOR CHIP 1.5K 1/16W(1608)
R255	1-218-712-11	s	RESISTOR,METAL 6.8K 1/16W
R256	1-218-696-11	s	RESISTOR CHIP 1.5K 1/16W(1608)
R257	1-218-728-11	s	RESISTOR,METAL 33K 1/16W
R258	1-218-664-11	s	RESISTOR,CHIP 68 1/16W (1608)
R259	1-218-715-11	s	RESISTOR,METAL 9.1K 1/16W
R260	1-218-716-11	s	RESISTOR,CHIP 10K 1/16W(1608)
RB1	1-233-936-11	s	NETWORK RESISTOR 10 (1608)
RB2	1-233-936-11	s	NETWORK RESISTOR 10 (1608)
RB3	1-233-936-11	s	NETWORK RESISTOR 10 (1608)
RB4	1-233-936-11	s	NETWORK RESISTOR 10 (1608)
RB5	1 233 936 11	s	NETWORK RESISTOR 10 (1608)
RB6	1-233-936-11	s	NETWORK RESISTOR 10 (1608)
RB7	1-239-309-11	s	RESISTOR ARRAY,CHIP 100K
RB8	1-239-309-11	s	RESISTOR ARRAY,CHIP 100K
RB9	1-239-309-11	s	RESISTOR ARRAY,CHIP 100K
RB10	1-239-309-11	s	RESISTOR ARRAY,CHIP 100K
RB11	1-239-309-11	s	RESISTOR ARRAY,CHIP 100K
RB12	1-239-309-11	s	RESISTOR ARRAY,CHIP 100K
RB13	1-239-309-11	s	RESISTOR ARRAY,CHIP 100K
RB14	1-239-309-11	s	RESISTOR ARRAY,CHIP 100K
RB15	1-239-309-11	s	RESISTOR ARRAY,CHIP 100K

DM-114 BOARD

Ref. No. or Q'ty	Part No.	SP	Description
1pc	A-8316-714-A	o	MOUNTED CIRCUIT BOARD, DM-114
2pcs	3-729-061-01	s	SCREW (M2X4.5) (TYPE 1)(STEEL)
6pcs	7-682-902-11	s	SCREW +PWH 2.6X5(EP-FE/ZN/CM2)
C101	1-164-315-11	s	CAPACITOR,CERAMIC 470PF/50V CH
C102	1-164-227-11	s	CAPACITOR,CERAMIC 0.022MF/25V
C103	1-164-227-11	s	CAPACITOR,CERAMIC 0.022MF/25V
C104	1-115-416-11	s	CAPACITOR,CERAMIC 1000PF/25V
C105	1-162-918-11	s	CAPACITOR,CERAMIC 18PF/50V CH
C107	1-164-227-11	s	CAPACITOR,CERAMIC 0.022MF/25V
C108	1-162-919-11	s	CAPACITOR,CERAMIC 22PF/50V CH
C109	1-164-227-11	s	CAPACITOR,CERAMIC 0.022MF/25V
C110	1-107-826-11	s	CAPACITOR,CHIP CERAMIC 0.1MF
C111	1-107-826-11	s	CAPACITOR,CHIP CERAMIC 0.1MF
C112	1-164-227-11	s	CAPACITOR,CERAMIC 0.022MF/25V
C113	1-164-380-11	s	CAPACITOR,CERAMIC 51PF CH (M-)
C114	1-164-227-11	s	CAPACITOR,CERAMIC 0.022MF/25V
C115	1-164-227-11	s	CAPACITOR,CERAMIC 0.022MF/25V
C116	1-162-924-11	s	CAPACITOR,CERAMIC 56PF/50V CH
C117	1-164-315-11	s	CAPACITOR,CERAMIC 470PF/50V CH
C118	1-164-227-11	s	CAPACITOR,CERAMIC 0.022MF/25V
C119	1-107-826-11	s	CAPACITOR,CHIP CERAMIC 0.1MF
C120	1-164-227-11	s	CAPACITOR,CERAMIC 0.022MF/25V
C121	1-164-227-11	s	CAPACITOR,CERAMIC 0.022MF/25V
C122	1-164-227-11	s	CAPACITOR,CERAMIC 0.022MF/25V
C123	1-164-238-11	s	CAPACITOR,CERAMIC 36PF/50V CH
C124	1-162-924-11	s	CAPACITOR,CERAMIC 56PF/50V CH
C125	1 164 227 11	s	CAPACITOR,CERAMIC 0.022MF/25V
C126	1-162-925-11	s	CAPACITOR,CERAMIC 68PF/50V CH
C127	1-162-928-11	s	CAPACITOR,CERAMIC 120PF/50V CH
C128	1-164-238-11	s	CAPACITOR,CERAMIC 36PF/50V CH
C129	1-162-924-11	s	CAPACITOR,CERAMIC 56PF/50V CH
C130	1-164-227-11	s	CAPACITOR,CERAMIC 0.022MF/25V
C131	1-164-227-11	s	CAPACITOR,CERAMIC 0.022MF/25V
C132	1-164-227-11	s	CAPACITOR,CERAMIC 0.022MF/25V
C133	1-164-227-11	s	CAPACITOR,CERAMIC 0.022MF/25V
C134	1-164-227-11	s	CAPACITOR,CERAMIC 0.022MF/25V
C135	1-162-923-11	s	CAPACITOR,CERAMIC 47PF/50V CH
C136	1-164-380-11	s	CAPACITOR,CERAMIC 51PF CH (M-)
C137	1-162-928-11	s	CAPACITOR,CERAMIC 120PF/50V CH
C138	1-162-917-11	s	CAPACITOR,CERAMIC 15PF/50V CH
C139	1-164-227-11	s	CAPACITOR,CERAMIC 0.022MF/25V
C140	1-164-227-11	s	CAPACITOR,CERAMIC 0.022MF/25V
C141	1-164-227-11	s	CAPACITOR,CERAMIC 0.022MF/25V
C142	1-164-227-11	s	CAPACITOR,CERAMIC 0.022MF/25V
C143	1-164-378-11	s	CAPACITOR CERAMIC 30PF/50V CH
C144	1-164-379-11	s	CAPACITOR,CERAMIC 43PF/50V CH
C145	1-164-227-11	s	CAPACITOR,CERAMIC 0.022MF/25V
C146	1-164-227-11	s	CAPACITOR,CERAMIC 0.022MF/25V
C147	1-107-826-11	s	CAPACITOR,CHIP CERAMIC 0.1MF
C148	1-107-826-11	s	CAPACITOR,CHIP CERAMIC 0.1MF
C149	1-107-826-11	s	CAPACITOR,CHIP CERAMIC 0.1MF
C150	1-104-608-11	s	CAPACITOR,ELECT 33MF/6.3V
C151	1-107-826-11	s	CAPACITOR,CHIP CERAMIC 0.1MF
C152	1-107-826-11	s	CAPACITOR,CHIP CERAMIC 0.1MF
C153	1-107-826-11	s	CAPACITOR,CHIP CERAMIC 0.1MF
C154	1-104-608-11	s	CAPACITOR,ELECT 33MF/6.3V
C155	1-164-227-11	s	CAPACITOR,CERAMIC 0.022MF/25V
C156	1-164-227-11	s	CAPACITOR,CERAMIC 0.022MF/25V

(DM-114 BOARD)

Ref. No. or Q'ty	Part No.	SP	Description
C157	1-107-826-11	s	CAPACITOR,CHIP CERAMIC 0.1MF
C158	1-107-826-11	s	CAPACITOR,CHIP CERAMIC 0.1MF
C159	1-107-826-11	s	CAPACITOR,CHIP CERAMIC 0.1MF
C160	1-164-315-11	s	CAPACITOR,CERAMIC 470PF/50V CH
C161	1-104-608-11	s	CAPACITOR,ELECT 33MF/6.3V
C162	1-164-315-11	s	CAPACITOR,CERAMIC 470PF/50V CH
C163	1-164-227-11	s	CAPACITOR,CERAMIC 0.022MF/25V
C164	1-164-227-11	s	CAPACITOR,CERAMIC 0.022MF/25V
C165	1-107-826-11	s	CAPACITOR,CHIP CERAMIC 0.1MF
C166	1-164-227-11	s	CAPACITOR,CERAMIC 0.022MF/25V
C167	1-164-227-11	s	CAPACITOR,CERAMIC 0.022MF/25V
C168	1-164-383-11	s	CAPACITOR,CERAMIC 110PF/50V CH
C169	1-164-384-11	s	CAPACITOR CERAMIC 130PF/50V CH
C170	1-164-227-11	s	CAPACITOR,CERAMIC 0.022MF/25V
C171	1-164-227-11	s	CAPACITOR,CERAMIC 0.022MF/25V
C172	1-164-227-11	s	CAPACITOR,CERAMIC 0.022MF/25V
C173	1-164-227-11	s	CAPACITOR,CERAMIC 0.022MF/25V
C174	1-164-227-11	s	CAPACITOR,CERAMIC 0.022MF/25V
C175	1-107-826-11	s	CAPACITOR,CHIP CERAMIC 0.1MF
C176	1-164-227-11	s	CAPACITOR,CERAMIC 0.022MF/25V
C177	1-164-227-11	s	CAPACITOR,CERAMIC 0.022MF/25V
C178	1-164-227-11	s	CAPACITOR,CERAMIC 0.022MF/25V
C179	1-126-391-11	s	CAPACITOR ELECT 47MF/6.3V(105)
C180	1-164-227-11	s	CAPACITOR,CERAMIC 0.022MF/25V
C181	1-107-826-11	s	CAPACITOR,CHIP CERAMIC 0.1MF
C182	1-162-910-11	s	CAPACITOR,CERAMIC 5PF/50V 1608
C183	1 162 910 11	s	CAPACITOR,CERAMIC 5PF/50V 1608
C184	1-104-608-11	s	CAPACITOR,ELECT 33MF/6.3V
C185	1-126-401-11	s	CAPACITOR,ELECT 1MF/50V(CHIP)
C186	1-126-401-11	s	CAPACITOR,ELECT 1MF/50V(CHIP)
C187	1-107-826-11	s	CAPACITOR,CHIP CERAMIC 0.1MF
C188	1-107-826-11	s	CAPACITOR,CHIP CERAMIC 0.1MF
C190	1-115-416-11	s	CAPACITOR,CERAMIC 1000PF/25V
C191	1-126-391-11	s	CAPACITOR ELECT 47MF/6.3V(105)
C192	1-107-826-11	s	CAPACITOR,CHIP CERAMIC 0.1MF
C193	1-162-913-11	s	CAPACITOR,CHIP CERAMIC 8PF/50V
C194	1-164-227-11	s	CAPACITOR,CERAMIC 0.022MF/25V
C195	1-162-919-11	s	CAPACITOR,CERAMIC 22PF/50V CH
C196	1-126-401-11	s	CAPACITOR,ELECT 1MF/50V(CHIP)
C197	1-107-826-11	s	CAPACITOR,CHIP CERAMIC 0.1MF
C198	1-162-959-11	s	CAPACITOR,CERAMIC 330PF/50V SL
C199	1-107-826-11	s	CAPACITOR,CHIP CERAMIC 0.1MF
C200	1-162-919-11	s	CAPACITOR,CERAMIC 22PF/50V CH
C201	1-107-826-11	s	CAPACITOR,CHIP CERAMIC 0.1MF
C203	1-107-826-11	s	CAPACITOR,CHIP CERAMIC 0.1MF
C204	1-107-826-11	s	CAPACITOR,CHIP CERAMIC 0.1MF
C301	1-164-227-11	s	CAPACITOR,CERAMIC 0.022MF/25V
C302	1-164-227-11	s	CAPACITOR,CERAMIC 0.022MF/25V
C303	1-164-315-11	s	CAPACITOR,CERAMIC 470PF/50V CH
C304	1-162-919-11	s	CAPACITOR,CERAMIC 22PF/50V CH
C305	1-162-921-11	s	CAPACITOR,CERAMIC 33PF/50V CH
C306	1-162-919-11	s	CAPACITOR,CERAMIC 22PF/50V CH
C307	1-162-921-11	s	CAPACITOR,CERAMIC 33PF/50V CH
C308	1-115-416-11	s	CAPACITOR,CERAMIC 1000PF/25V
C309	1-162-918-11	s	CAPACITOR,CERAMIC 18PF/50V CH
C310	1-104-608-11	s	CAPACITOR,ELECT 33MF/6.3V
C311	1-107-826-11	s	CAPACITOR,CHIP CERAMIC 0.1MF
C312	1-164-227-11	s	CAPACITOR,CERAMIC 0.022MF/25V
C313	1-164-227-11	s	CAPACITOR,CERAMIC 0.022MF/25V

(DM-114 BOARD)

Ref. No. or Q'ty	Part No.	SP	Description
C314	1-164-315-11	s	CAPACITOR,CERAMIC 470PF/50V CH
C315	1-164-227-11	s	CAPACITOR,CERAMIC 0.022MF/25V
C316	1-164-227-11	s	CAPACITOR,CERAMIC 0.022MF/25V
C317	1-162-922-11	s	CAPACITOR,CERAMIC 39PF/50V CH
C318	1-164-380-11	s	CAPACITOR,CERAMIC 51PF CH (M-)
C319	1-164-227-11	s	CAPACITOR,CERAMIC 0.022MF/25V
C320	1-162-926-11	s	CAPACITOR,CERAMIC 82PF/50V CH
C321	1-162-927-11	s	CAPACITOR,CERAMIC 100PF/50V CH
C322	1-104-608-11	s	CAPACITOR,ELECT 33MF/6.3V
C323	1-162-922-11	s	CAPACITOR,CERAMIC 39PF/50V CH
C324	1-164-380-11	s	CAPACITOR,CERAMIC 51PF CH (M-)
C325	1-107-826-11	s	CAPACITOR,CHIP CERAMIC 0.1MF
C326	1-164-217-11	s	CAPACITOR,CERAMIC 150PF/50V CH
C327	1-162-910-11	s	CAPACITOR,CERAMIC 5PF/50V 1608
C328	1-164-315-11	s	CAPACITOR,CERAMIC 470PF/50V CH
C329	1-164-227-11	s	CAPACITOR,CERAMIC 0.022MF/25V
C330	1-164-227-11	s	CAPACITOR,CERAMIC 0.022MF/25V
C331	1-164-227-11	s	CAPACITOR,CERAMIC 0.022MF/25V
C332	1-164-227-11	s	CAPACITOR,CERAMIC 0.022MF/25V
C333	1-164-382-11	s	CAPACITOR,CHIP CERAMIC 91PF/50
C334	1-164-380-11	s	CAPACITOR,CERAMIC 51PF CH (M-)
C335	1-164-227-11	s	CAPACITOR,CERAMIC 0.022MF/25V
C336	1-164-227-11	s	CAPACITOR,CERAMIC 0.022MF/25V
C337	1-164-227-11	s	CAPACITOR,CERAMIC 0.022MF/25V
C338	1-164-227-11	s	CAPACITOR,CERAMIC 0.022MF/25V
C339	1-104-608-11	s	CAPACITOR,ELECT 33MF/6.3V
C340	1 162 975 11	s	CAPACITOR,CERAMIC 24PF/50V CH
C341	1-164-380-11	s	CAPACITOR,CERAMIC 51PF CH (M-)
C342	1-107-826-11	s	CAPACITOR,CHIP CERAMIC 0.1MF
C343	1-107-826-11	s	CAPACITOR,CHIP CERAMIC 0.1MF
C344	1-107-826-11	s	CAPACITOR,CHIP CERAMIC 0.1MF
C345	1-164-227-11	s	CAPACITOR,CERAMIC 0.022MF/25V
C346	1-164-227-11	s	CAPACITOR,CERAMIC 0.022MF/25V
C347	1-104-608-11	s	CAPACITOR,ELECT 33MF/6.3V
C348	1-107-826-11	s	CAPACITOR,CHIP CERAMIC 0.1MF
C349	1-107-826-11	s	CAPACITOR,CHIP CERAMIC 0.1MF
C350	1-164-227-11	s	CAPACITOR,CERAMIC 0.022MF/25V
C351	1-164-227-11	s	CAPACITOR,CERAMIC 0.022MF/25V
C352	1-164-315-11	s	CAPACITOR,CERAMIC 470PF/50V CH
C353	1-164-315-11	s	CAPACITOR,CERAMIC 470PF/50V CH
C354	1-164-227-11	s	CAPACITOR,CERAMIC 0.022MF/25V
C355	1-164-227-11	s	CAPACITOR,CERAMIC 0.022MF/25V
C356	1-164-227-11	s	CAPACITOR,CERAMIC 0.022MF/25V
C357	1-164-227-11	s	CAPACITOR,CERAMIC 0.022MF/25V
C358	1-162-927-11	s	CAPACITOR,CERAMIC 100PF/50V CH
C359	1-164-385-11	s	CAPACITOR,CERAMIC 160PF/50V
C360	1-164-227-11	s	CAPACITOR,CERAMIC 0.022MF/25V
C361	1-164-227-11	s	CAPACITOR,CERAMIC 0.022MF/25V
C362	1-164-227-11	s	CAPACITOR,CERAMIC 0.022MF/25V
C363	1-164-227-11	s	CAPACITOR,CERAMIC 0.022MF/25V
C364	1-164-227-11	s	CAPACITOR,CERAMIC 0.022MF/25V
C365	1-107-826-11	s	CAPACITOR,CHIP CERAMIC 0.1MF
C366	1-164-227-11	s	CAPACITOR,CERAMIC 0.022MF/25V
C367	1-164-227-11	s	CAPACITOR,CERAMIC 0.022MF/25V
C368	1-164-227-11	s	CAPACITOR,CERAMIC 0.022MF/25V
C369	1-162-913-11	s	CAPACITOR,CHIP CERAMIC 8PF/50V
C370	1-126-391-11	s	CAPACITOR ELECT 47MF/6.3V(105)
C371	1-162-913-11	s	CAPACITOR,CHIP CERAMIC 8PF/50V
C372	1-104-608-11	s	CAPACITOR,ELECT 33MF/6.3V

(DM-114 BOARD)

Ref. No. or Q'ty	Part No.	SP	Description
C373	1-107-826-11	s	CAPACITOR,CHIP CERAMIC 0.1MF
C374	1-107-826-11	s	CAPACITOR,CHIP CERAMIC 0.1MF
C375	1-107-826-11	s	CAPACITOR,CHIP CERAMIC 0.1MF
C377	1-126-401-11	s	CAPACITOR,ELECT 1MF/50V(CHIP)
C378	1-126-401-11	s	CAPACITOR,ELECT 1MF/50V(CHIP)
C379	1-115-416-11	s	CAPACITOR,CERAMIC 1000PF/25V
C380	1-162-913-11	s	CAPACITOR,CHIP CERAMIC 8PF/50V
C381	1-126-391-11	s	CAPACITOR ELECT 47MF/6.3V(105)
C382	1-107-826-11	s	CAPACITOR,CHIP CERAMIC 0.1MF
C383	1-162-919-11	s	CAPACITOR,CERAMIC 22PF/50V CH
C384	1-164-227-11	s	CAPACITOR,CERAMIC 0.022MF/25V
C385	1-126-401-11	s	CAPACITOR,ELECT 1MF/50V(CHIP)
C386	1-162-959-11	s	CAPACITOR,CERAMIC 330PF/50V SL
C387	1-162-919-11	s	CAPACITOR,CERAMIC 22PF/50V CH
C388	1-107-826-11	s	CAPACITOR,CHIP CERAMIC 0.1MF
C389	1-107-826-11	s	CAPACITOR,CHIP CERAMIC 0.1MF
C501	1-164-227-11	s	CAPACITOR,CERAMIC 0.022MF/25V
C502	1-135-177-21	s	CAPACITOR TANTALUM 1MF/25V
C503	1-104-608-11	s	CAPACITOR,ELECT 33MF/6.3V
C505	1-164-227-11	s	CAPACITOR,CERAMIC 0.022MF/25V
C506	1-164-227-11	s	CAPACITOR,CERAMIC 0.022MF/25V
C507	1-164-227-11	s	CAPACITOR,CERAMIC 0.022MF/25V
C508	1-164-227-11	s	CAPACITOR,CERAMIC 0.022MF/25V
C509	1-164-227-11	s	CAPACITOR,CERAMIC 0.022MF/25V
C510	1-164-227-11	s	CAPACITOR,CERAMIC 0.022MF/25V
C511	1-164-227-11	s	CAPACITOR,CERAMIC 0.022MF/25V
C512	1 164 227 11	s	CAPACITOR,CERAMIC 0.022MF/25V
C513	1-107-826-11	s	CAPACITOR,CHIP CERAMIC 0.1MF
C514	1-117-373-11	s	CAPACITOR, (SMD) 150MF/6.3V
C515	1-164-227-11	s	CAPACITOR,CERAMIC 0.022MF/25V
C516	1-107-826-11	s	CAPACITOR,CHIP CERAMIC 0.1MF
C517	1-164-227-11	s	CAPACITOR,CERAMIC 0.022MF/25V
C518	1-126-394-11	s	CAPACITOR ELECT 10MF/16V(CHIP)
C519	1-126-391-11	s	CAPACITOR ELECT 47MF/6.3V(105)
C520	1-126-392-11	s	CAPACITOR,CHIP ELECT100MF/6.3V
C521	1-104-922-21	s	CAPACITOR,MINITURE MOLDMICA
C522	1-107-826-11	s	CAPACITOR,CHIP CERAMIC 0.1MF
C523	1-126-392-11	s	CAPACITOR,CHIP ELECT100MF/6.3V
C524	1-126-391-11	s	CAPACITOR ELECT 47MF/6.3V(105)
C525	1-126-398-11	s	CAPACITOR ELECT 4.7MF/35V(CHIP
C526	1-162-908-11	s	CAPACITOR,CERAMIC 3PF/50V 1608
C527	1-162-912-11	s	CAPACITOR,CERAMIC 7PF/50V 1608
C528	1-162-909-11	s	CAPACITOR,CERAMIC 4.0PF/50V CH
C529	1-164-238-11	s	CAPACITOR,CERAMIC 36PF/50V CH
C530	1-164-379-11	s	CAPACITOR,CERAMIC 43PF/50V CH
C531	1-126-392-11	s	CAPACITOR,CHIP ELECT100MF/6.3V
C532	1-107-826-11	s	CAPACITOR,CHIP CERAMIC 0.1MF
C533	1-126-390-11	s	CAPACITOR ELECT 22MF/6.3V(105)
C534	1-135-180-21	s	CAPACITOR TANTALUM 3.3MF/10V
C537	1-107-826-11	s	CAPACITOR,CHIP CERAMIC 0.1MF
C538	1-117-373-11	s	CAPACITOR, (SMD) 150MF/6.3V
C539	1-135-177-21	s	CAPACITOR TANTALUM 1MF/25V
C540	1-107-826-11	s	CAPACITOR,CHIP CERAMIC 0.1MF
C541	1-126-392-11	s	CAPACITOR,CHIP ELECT100MF/6.3V
C542	1-126-392-11	s	CAPACITOR,CHIP ELECT100MF/6.3V
C543	1-107-826-11	s	CAPACITOR,CHIP CERAMIC 0.1MF
C544	1-107-826-11	s	CAPACITOR,CHIP CERAMIC 0.1MF
C545	1-126-392-11	s	CAPACITOR,CHIP ELECT100MF/6.3V
C550	1-107-826-11	s	CAPACITOR,CHIP CERAMIC 0.1MF

(DM-114 BOARD)

Ref. No. or Q'ty	Part No.	SP	Description
C551	1-107-826-11	s	CAPACITOR,CHIP CERAMIC 0.1MF
C552	1-107-826-11	s	CAPACITOR,CHIP CERAMIC 0.1MF
C553	1-107-826-11	s	CAPACITOR,CHIP CERAMIC 0.1MF
C554	1-164-227-11	s	CAPACITOR,CERAMIC 0.022MF/25V
C555	1-164-227-11	s	CAPACITOR,CERAMIC 0.022MF/25V
C556	1-107-826-11	s	CAPACITOR,CHIP CERAMIC 0.1MF
C557	1-126-396-11	s	CAPACITOR ELECT 47MF/16V(CHIP)
C558	1-107-826-11	s	CAPACITOR,CHIP CERAMIC 0.1MF
C559	1-164-160-11	s	CAPACITOR,CERAMIC 20PF/50V CH
C560	1-107-826-11	s	CAPACITOR,CHIP CERAMIC 0.1MF
C561	1-164-227-11	s	CAPACITOR,CERAMIC 0.022MF/25V
C562	1-117-373-11	s	CAPACITOR, (SMD) 150MF/6.3V
C563	1-117-373-11	s	CAPACITOR, (SMD) 150MF/6.3V
C564	1-107-826-11	s	CAPACITOR,CHIP CERAMIC 0.1MF
C565	1-162-920-11	s	CAPACITOR,CERAMIC 27PF/50V CH
C566	1-135-070-00	s	CAPACITOR TANTALUM 0.1MF/35V
C567	1-164-227-11	s	CAPACITOR,CERAMIC 0.022MF/25V
C568	1-162-920-11	s	CAPACITOR,CERAMIC 27PF/50V CH
C569	1-107-826-11	s	CAPACITOR,CHIP CERAMIC 0.1MF
C570	1-107-826-11	s	CAPACITOR,CHIP CERAMIC 0.1MF
C571	1-162-915-11	s	CAPACITOR,CERAMIC 10PF/50V CH
C701	1-107-826-11	s	CAPACITOR,CHIP CERAMIC 0.1MF
C702	1-164-227-11	s	CAPACITOR,CERAMIC 0.022MF/25V
C703	1-117-373-11	s	CAPACITOR, (SMD) 150MF/6.3V
C704	1-164-227-11	s	CAPACITOR,CERAMIC 0.022MF/25V
C705	1-164-227-11	s	CAPACITOR,CERAMIC 0.022MF/25V
C706	1 126 391 11	s	CAPACITOR ELECT 47MF/6.3V(105)
C707	1-126-392-11	s	CAPACITOR,CHIP ELECT100MF/6.3V
C708	1-104-922-21	s	CAPACITOR,MINITURE MOLDMICA
C709	1-126-398-11	s	CAPACITOR ELECT 4.7MF/35V(CHIP
C710	1-126-391-11	s	CAPACITOR ELECT 47MF/6.3V(105)
C711	1-107-826-11	s	CAPACITOR,CHIP CERAMIC 0.1MF
C712	1-126-392-11	s	CAPACITOR,CHIP ELECT100MF/6.3V
C713	1-164-227-11	s	CAPACITOR,CERAMIC 0.022MF/25V
C714	1-126-392-11	s	CAPACITOR,CHIP ELECT100MF/6.3V
C715	1-162-927-11	s	CAPACITOR,CERAMIC 100PF/50V CH
C716	1-126-392-11	s	CAPACITOR,CHIP ELECT100MF/6.3V
C717	1-107-826-11	s	CAPACITOR,CHIP CERAMIC 0.1MF
C718	1-126-390-11	s	CAPACITOR ELECT 22MF/6.3V(105)
C719	1-135-180-21	s	CAPACITOR TANTALUM 3.3MF/10V
C720	1-107-826-11	s	CAPACITOR,CHIP CERAMIC 0.1MF
C721	1-117-373-11	s	CAPACITOR, (SMD) 150MF/6.3V
C722	1-135-177-21	s	CAPACITOR TANTALUM 1MF/25V
C723	1-107-826-11	s	CAPACITOR,CHIP CERAMIC 0.1MF
C724	1-107-826-11	s	CAPACITOR,CHIP CERAMIC 0.1MF
C725	1-107-826-11	s	CAPACITOR,CHIP CERAMIC 0.1MF
C726	1-126-392-11	s	CAPACITOR,CHIP ELECT100MF/6.3V
C727	1-164-227-11	s	CAPACITOR,CERAMIC 0.022MF/25V
C728	1-164-227-11	s	CAPACITOR,CERAMIC 0.022MF/25V
C729	1-107-826-11	s	CAPACITOR,CHIP CERAMIC 0.1MF
C730	1-126-392-11	s	CAPACITOR,CHIP ELECT100MF/6.3V
C731	1-107-826-11	s	CAPACITOR,CHIP CERAMIC 0.1MF
C732	1-107-826-11	s	CAPACITOR,CHIP CERAMIC 0.1MF
C733	1-107-826-11	s	CAPACITOR,CHIP CERAMIC 0.1MF
C734	1-126-396-11	s	CAPACITOR ELECT 47MF/16V(CHIP)
C735	1-107-826-11	s	CAPACITOR,CHIP CERAMIC 0.1MF
C736	1-164-160-11	s	CAPACITOR,CERAMIC 20PF/50V CH
C737	1-107-826-11	s	CAPACITOR,CHIP CERAMIC 0.1MF
C738	1-164-227-11	s	CAPACITOR,CERAMIC 0.022MF/25V

http://getMANUAL.com

(DM-114 BOARD)

Ref. No. or Q'ty	Part No.	SP	Description
C739	1-117-373-11	s	CAPACITOR, (SMD) 150MF/6.3V
C740	1-117-373-11	s	CAPACITOR, (SMD) 150MF/6.3V
C741	1-107-826-11	s	CAPACITOR,CHIP CERAMIC 0.1MF
C742	1-162-920-11	s	CAPACITOR,CERAMIC 27PF/50V CH
C743	1-135-070-00	s	CAPACITOR TANTALUM 0.1MF/35V
C744	1-164-227-11	s	CAPACITOR,CERAMIC 0.022MF/25V
C745	1-162-920-11	s	CAPACITOR,CERAMIC 27PF/50V CH
C746	1-107-826-11	s	CAPACITOR,CHIP CERAMIC 0.1MF
C747	1-107-826-11	s	CAPACITOR,CHIP CERAMIC 0.1MF
C901	1-162-919-11	s	CAPACITOR,CERAMIC 22PF/50V CH
C902	1-162-919-11	s	CAPACITOR,CERAMIC 22PF/50V CH
C903	1-126-392-11	s	CAPACITOR,CHIP ELECT100MF/6.3V
C904	1-164-227-11	s	CAPACITOR,CERAMIC 0.022MF/25V
C905	1-164-227-11	s	CAPACITOR,CERAMIC 0.022MF/25V
C906	1-164-227-11	s	CAPACITOR,CERAMIC 0.022MF/25V
C907	1-126-392-11	s	CAPACITOR,CHIP ELECT100MF/6.3V
C908	1-164-227-11	s	CAPACITOR,CERAMIC 0.022MF/25V
C909	1-162-919-11	s	CAPACITOR,CERAMIC 22PF/50V CH
C910	1-162-919-11	s	CAPACITOR,CERAMIC 22PF/50V CH
C911	1-126-392-11	s	CAPACITOR,CHIP ELECT100MF/6.3V
C912	1-126-392-11	s	CAPACITOR,CHIP ELECT100MF/6.3V
C913	1-164-227-11	s	CAPACITOR,CERAMIC 0.022MF/25V
C914	1-164-227-11	s	CAPACITOR,CERAMIC 0.022MF/25V
C915	1-126-392-11	s	CAPACITOR,CHIP ELECT100MF/6.3V
C916	1-164-227-11	s	CAPACITOR,CERAMIC 0.022MF/25V
C917	1-164-227-11	s	CAPACITOR,CERAMIC 0.022MF/25V
C918	1-164-227-11	s	CAPACITOR,CERAMIC 0.022MF/25V
C919	1-107-826-11	s	CAPACITOR,CHIP CERAMIC 0.1MF
C920	1-164-315-11	s	CAPACITOR,CERAMIC 470PF/50V CH
C921	1-107-826-11	s	CAPACITOR,CHIP CERAMIC 0.1MF
C922	1-126-394-11	s	CAPACITOR ELECT 10MF/16V(CHIP)
C923	1-126-394-11	s	CAPACITOR ELECT 10MF/16V(CHIP)
C924	1-107-826-11	s	CAPACITOR,CHIP CERAMIC 0.1MF
C925	1-107-826-11	s	CAPACITOR,CHIP CERAMIC 0.1MF
C926	1-107-826-11	s	CAPACITOR,CHIP CERAMIC 0.1MF
C927	1-164-227-11	s	CAPACITOR,CERAMIC 0.022MF/25V
C928	1-126-392-11	s	CAPACITOR,CHIP ELECT100MF/6.3V
C929	1-126-393-11	s	CAPACITOR ELECT 33MF/10V(CHIP)
C930	1-113-981-11	s	CAPACITOR TANTALUM 22MF/20V
C931	1-126-392-11	s	CAPACITOR,CHIP ELECT100MF/6.3V
C932	1-126-392-11	s	CAPACITOR,CHIP ELECT100MF/6.3V
C933	1-126-392-11	s	CAPACITOR,CHIP ELECT100MF/6.3V
C934	1-126-392-11	s	CAPACITOR,CHIP ELECT100MF/6.3V
C935	1-107-826-11	s	CAPACITOR,CHIP CERAMIC 0.1MF
C936	1-107-826-11	s	CAPACITOR,CHIP CERAMIC 0.1MF
C937	1-107-826-11	s	CAPACITOR,CHIP CERAMIC 0.1MF
C938	1-107-826-11	s	CAPACITOR,CHIP CERAMIC 0.1MF
C939	1-107-826-11	s	CAPACITOR,CHIP CERAMIC 0.1MF
C940	1-107-826-11	s	CAPACITOR,CHIP CERAMIC 0.1MF
C941	1-126-396-11	s	CAPACITOR ELECT 47MF/16V(CHIP)
C942	1-104-823-11	s	CAPACITOR,CHIP TANTAL 47MF/16V
C943	1-104-823-11	s	CAPACITOR,CHIP TANTAL 47MF/16V
C944	1-104-823-11	s	CAPACITOR,CHIP TANTAL 47MF/16V
C945	1-104-823-11	s	CAPACITOR,CHIP TANTAL 47MF/16V
C946	1-104-823-11	s	CAPACITOR,CHIP TANTAL 47MF/16V
C947	1-104-823-11	s	CAPACITOR,CHIP TANTAL 47MF/16V
C948	1-107-826-11	s	CAPACITOR,CHIP CERAMIC 0.1MF
C949	1-107-826-11	s	CAPACITOR,CHIP CERAMIC 0.1MF
C950	1-107-826-11	s	CAPACITOR,CHIP CERAMIC 0.1MF

(DM-114 BOARD)

Ref. No. or Q'ty	Part No.	SP	Description
C951	1-107-826-11	s	CAPACITOR,CHIP CERAMIC 0.1MF
C952	1-107-826-11	s	CAPACITOR,CHIP CERAMIC 0.1MF
C953	1-107-826-11	s	CAPACITOR,CHIP CERAMIC 0.1MF
C954	1-104-823-11	s	CAPACITOR,CHIP TANTAL 47MF/16V
C955	1-104-823-11	s	CAPACITOR,CHIP TANTAL 47MF/16V
C956	1-104-823-11	s	CAPACITOR,CHIP TANTAL 47MF/16V
C957	1-104-823-11	s	CAPACITOR,CHIP TANTAL 47MF/16V
C958	1-126-396-11	s	CAPACITOR ELECT 47MF/16V(CHIP)
C959	1-104-823-11	s	CAPACITOR,CHIP TANTAL 47MF/16V
C960	1-162-923-11	s	CAPACITOR,CERAMIC 47PF/50V CH
C961	1-162-923-11	s	CAPACITOR,CERAMIC 47PF/50V CH
C962	1-162-923-11	s	CAPACITOR,CERAMIC 47PF/50V CH
C963	1-162-923-11	s	CAPACITOR,CERAMIC 47PF/50V CH
C964	1-162-923-11	s	CAPACITOR,CERAMIC 47PF/50V CH
C965	1-162-923-11	s	CAPACITOR,CERAMIC 47PF/50V CH
C1101	1-164-227-11	s	CAPACITOR,CERAMIC 0.022MF/25V
C1102	1-164-227-11	s	CAPACITOR,CERAMIC 0.022MF/25V
C1103	1-164-227-11	s	CAPACITOR,CERAMIC 0.022MF/25V
C1105	1-162-921-11	s	CAPACITOR,CERAMIC 33PF/50V CH
C1106	1-164-227-11	s	CAPACITOR,CERAMIC 0.022MF/25V
C1107	1-126-391-11	s	CAPACITOR ELECT 47MF/6.3V(105)
C1108	1-135-070-00	s	CAPACITOR TANTALUM 0.1MF/35V
C1109	1-164-227-11	s	CAPACITOR,CERAMIC 0.022MF/25V
C1110	1-115-416-11	s	CAPACITOR,CERAMIC 1000PF/25V
C1111	1-164-227-11	s	CAPACITOR,CERAMIC 0.022MF/25V
C1112	1-107-826-11	s	CAPACITOR,CHIP CERAMIC 0.1MF
C1113	1-135-070-00	s	CAPACITOR TANTALUM 0.1MF/35V
C1114	1-164-227-11	s	CAPACITOR,CERAMIC 0.022MF/25V
C1115	1-164-227-11	s	CAPACITOR,CERAMIC 0.022MF/25V
C1116	1-126-394-11	s	CAPACITOR ELECT 10MF/16V(CHIP)
C1117	1-126-394-11	s	CAPACITOR ELECT 10MF/16V(CHIP)
C1118	1-104-852-11	s	CAPACITOR,TANTALUM 22MF/10V
C1119	1-135-177-21	s	CAPACITOR TANTALUM 1MF/25V
C1121	1-162-970-11	s	CAPACITOR CERAMIC 0.01MF/25V B
C1122	1-104-852-11	s	CAPACITOR,TANTALUM 22MF/10V
C1123	1-107-826-11	s	CAPACITOR,CHIP CERAMIC 0.1MF
C1125	1-162-928-11	s	CAPACITOR,CERAMIC 120PF/50V CH
C1126	1-164-227-11	s	CAPACITOR,CERAMIC 0.022MF/25V
C1128	1-162-915-11	s	CAPACITOR,CERAMIC 10PF/50V CH
C1129	1-117-372-11	s	CAP,ELECT (SMD) 100MF/10V
C1130	1-117-372-11	s	CAP,ELECT (SMD) 100MF/10V
C1131	1-117-373-11	s	CAPACITOR, (SMD) 150MF/6.3V
C1132	1-164-227-11	s	CAPACITOR,CERAMIC 0.022MF/25V
C1133	1-164-227-11	s	CAPACITOR,CERAMIC 0.022MF/25V
C1134	1-164-227-11	s	CAPACITOR,CERAMIC 0.022MF/25V
C1135	1-162-927-11	s	CAPACITOR,CERAMIC 100PF/50V CH
C1136	1-164-227-11	s	CAPACITOR,CERAMIC 0.022MF/25V
C1138	1-126-392-11	s	CAPACITOR,CHIP ELECT100MF/6.3V
C1139	1-126-392-11	s	CAPACITOR,CHIP ELECT100MF/6.3V
C1140	1-164-227-11	s	CAPACITOR,CERAMIC 0.022MF/25V
C1141	1-164-227-11	s	CAPACITOR,CERAMIC 0.022MF/25V
C1142	1-164-227-11	s	CAPACITOR,CERAMIC 0.022MF/25V
C1143	1-104-852-11	s	CAPACITOR,TANTALUM 22MF/10V
C1144	1-104-852-11	s	CAPACITOR,TANTALUM 22MF/10V
C1145	1-104-852-11	s	CAPACITOR,TANTALUM 22MF/10V
C1146	1-164-227-11	s	CAPACITOR,CERAMIC 0.022MF/25V
C1147	1-164-227-11	s	CAPACITOR,CERAMIC 0.022MF/25V
C1148	1-164-227-11	s	CAPACITOR,CERAMIC 0.022MF/25V
C1149	1-164-227-11	s	CAPACITOR,CERAMIC 0.022MF/25V

(DM-114 BOARD)

Ref. No. or Q'ty	Part No.	SP	Description
C1201	1-164-227-11	s	CAPACITOR,CERAMIC 0.022MF/25V
C1202	1-164-227-11	s	CAPACITOR,CERAMIC 0.022MF/25V
C1203	1-126-391-11	s	CAPACITOR ELECT 47MF/6.3V(105)
C1204	1-164-227-11	s	CAPACITOR,CERAMIC 0.022MF/25V
C1205	1-135-070-00	s	CAPACITOR TANTALUM 0.1MF/35V
C1206	1-164-227-11	s	CAPACITOR,CERAMIC 0.022MF/25V
C1207	1-115-416-11	s	CAPACITOR,CERAMIC 1000PF/25V
C1208	1-135-070-00	s	CAPACITOR TANTALUM 0.1MF/35V
C1209	1-107-826-11	s	CAPACITOR,CHIP CERAMIC 0.1MF
C1210	1-164-227-11	s	CAPACITOR,CERAMIC 0.022MF/25V
C1211	1-164-227-11	s	CAPACITOR,CERAMIC 0.022MF/25V
C1212	1-126-394-11	s	CAPACITOR ELECT 10MF/16V(CHIP)
C1213	1-126-394-11	s	CAPACITOR ELECT 10MF/16V(CHIP)
C1214	1-104-852-11	s	CAPACITOR,TANTALUM 22MF/10V
C1215	1-135-177-21	s	CAPACITOR TANTALUM 1MF/25V
C1217	1-162-970-11	s	CAPACITOR CERAMIC 0.01MF/25V B
C1218	1-107-826-11	s	CAPACITOR,CHIP CERAMIC 0.1MF
C1220	1-162-928-11	s	CAPACITOR,CERAMIC 120PF/50V CH
C1222	1-162-915-11	s	CAPACITOR,CERAMIC 10PF/50V CH
C1223	1-164-227-11	s	CAPACITOR,CERAMIC 0.022MF/25V
C1224	1-117-372-11	s	CAP,ELECT (SMD) 100MF/10V
C1225	1-117-372-11	s	CAP,ELECT (SMD) 100MF/10V
C1226	1-117-373-11	s	CAPACITOR, (SMD) 150MF/6.3V
C1227	1-164-227-11	s	CAPACITOR,CERAMIC 0.022MF/25V
C1228	1-164-227-11	s	CAPACITOR,CERAMIC 0.022MF/25V
C1229	1-164-227-11	s	CAPACITOR,CERAMIC 0.022MF/25V
C1230	1 164 217 11	s	CAPACITOR,CERAMIC 150PF/50V CH
C1232	1-164-227-11	s	CAPACITOR,CERAMIC 0.022MF/25V
C1233	1-126-392-11	s	CAPACITOR,CHIP ELECT100MF/6.3V
C1234	1-126-392-11	s	CAPACITOR,CHIP ELECT100MF/6.3V
C1235	1-164-227-11	s	CAPACITOR,CERAMIC 0.022MF/25V
C1236	1-164-227-11	s	CAPACITOR,CERAMIC 0.022MF/25V
C1237	1-164-227-11	s	CAPACITOR,CERAMIC 0.022MF/25V
C1301	1-104-608-11	s	CAPACITOR,ELECT 33MF/6.3V
C1302	1-104-608-11	s	CAPACITOR,ELECT 33MF/6.3V
C1303	1-107-826-11	s	CAPACITOR,CHIP CERAMIC 0.1MF
C1304	1-107-826-11	s	CAPACITOR,CHIP CERAMIC 0.1MF
C1305	1-162-917-11	s	CAPACITOR,CERAMIC 15PF/50V CH
C1306	1-164-227-11	s	CAPACITOR,CERAMIC 0.022MF/25V
C1307	1-104-608-11	s	CAPACITOR,ELECT 33MF/6.3V
C1308	1-164-227-11	s	CAPACITOR,CERAMIC 0.022MF/25V
C1309	1-107-826-11	s	CAPACITOR,CHIP CERAMIC 0.1MF
C1310	1-162-927-11	s	CAPACITOR,CERAMIC 100PF/50V CH
C1311	1-162-959-11	s	CAPACITOR,CERAMIC 330PF/50V SL
C1312	1-164-315-11	s	CAPACITOR,CERAMIC 470PF/50V CH
C1313	1-164-227-11	s	CAPACITOR,CERAMIC 0.022MF/25V
C1314	1-164-227-11	s	CAPACITOR,CERAMIC 0.022MF/25V
C1316	1-164-227-11	s	CAPACITOR,CERAMIC 0.022MF/25V
C1317	1-164-227-11	s	CAPACITOR,CERAMIC 0.022MF/25V
C1318	1-164-227-11	s	CAPACITOR,CERAMIC 0.022MF/25V
C1319	1-126-394-11	s	CAPACITOR ELECT 10MF/16V(CHIP)
C1320	1-164-227-11	s	CAPACITOR,CERAMIC 0.022MF/25V
C1321	1-164-227-11	s	CAPACITOR,CERAMIC 0.022MF/25V
C1322	1-104-608-11	s	CAPACITOR,ELECT 33MF/6.3V
C1323	1-107-826-11	s	CAPACITOR,CHIP CERAMIC 0.1MF
C1324	1-164-227-11	s	CAPACITOR,CERAMIC 0.022MF/25V
C1325	1-164-227-11	s	CAPACITOR,CERAMIC 0.022MF/25V
C1326	1-162-921-11	s	CAPACITOR,CERAMIC 33PF/50V CH
C1327	1-164-227-11	s	CAPACITOR,CERAMIC 0.022MF/25V

(DM-114 BOARD)

Ref. No. or Q'ty	Part No.	SP	Description
C1328	1-164-227-11	s	CAPACITOR,CERAMIC 0.022MF/25V
C1329	1-164-227-11	s	CAPACITOR,CERAMIC 0.022MF/25V
C1330	1-162-921-11	s	CAPACITOR,CERAMIC 33PF/50V CH
C1331	1-164-227-11	s	CAPACITOR,CERAMIC 0.022MF/25V
C1332	1-164-227-11	s	CAPACITOR,CERAMIC 0.022MF/25V
C1401	1-126-401-11	s	CAPACITOR,ELECT 1MF/50V(CHIP)
C1402	1-126-401-11	s	CAPACITOR,ELECT 1MF/50V(CHIP)
C1403	1-162-927-11	s	CAPACITOR,CERAMIC 100PF/50V CH
C1404	1-164-315-11	s	CAPACITOR,CERAMIC 470PF/50V CH
C1405	1-107-826-11	s	CAPACITOR,CHIP CERAMIC 0.1MF
C1406	1-164-227-11	s	CAPACITOR,CERAMIC 0.022MF/25V
C1407	1-115-416-11	s	CAPACITOR,CERAMIC 1000PF/25V
C1408	1-164-227-11	s	CAPACITOR,CERAMIC 0.022MF/25V
C1409	1-126-401-11	s	CAPACITOR,ELECT 1MF/50V(CHIP)
C1410	1-107-826-11	s	CAPACITOR,CHIP CERAMIC 0.1MF
C1411	1-107-826-11	s	CAPACITOR,CHIP CERAMIC 0.1MF
C1412	1-126-401-11	s	CAPACITOR,ELECT 1MF/50V(CHIP)
C1413	1-164-227-11	s	CAPACITOR,CERAMIC 0.022MF/25V
C1414	1-107-826-11	s	CAPACITOR,CHIP CERAMIC 0.1MF
C1415	1-107-826-11	s	CAPACITOR,CHIP CERAMIC 0.1MF
C1416	1-162-927-11	s	CAPACITOR,CERAMIC 100PF/50V CH
C1417	1-126-392-11	s	CAPACITOR,CHIP ELECT100MF/6.3V
C1418	1-164-227-11	s	CAPACITOR,CERAMIC 0.022MF/25V
C1419	1-164-227-11	s	CAPACITOR,CERAMIC 0.022MF/25V
C1420	1-162-923-11	s	CAPACITOR,CERAMIC 47PF/50V CH
C1421	1-164-227-11	s	CAPACITOR,CERAMIC 0.022MF/25V
C1422	1 164 227 11	s	CAPACITOR,CERAMIC 0.022MF/25V
C1423	1-164-227-11	s	CAPACITOR,CERAMIC 0.022MF/25V
C1424	1-126-396-11	s	CAPACITOR ELECT 47MF/16V(CHIP)
C1425	1-164-315-11	s	CAPACITOR,CERAMIC 470PF/50V CH
C1426	1-162-970-11	s	CAPACITOR CERAMIC 0.01MF/25V B
C1427	1-162-927-11	s	CAPACITOR,CERAMIC 100PF/50V CH
C1428	1-126-392-11	s	CAPACITOR,CHIP ELECT100MF/6.3V
C1429	1-164-227-11	s	CAPACITOR,CERAMIC 0.022MF/25V
C1430	1-164-227-11	s	CAPACITOR,CERAMIC 0.022MF/25V
C1431	1-164-227-11	s	CAPACITOR,CERAMIC 0.022MF/25V
C1432	1-162-927-11	s	CAPACITOR,CERAMIC 100PF/50V CH
C1433	1-162-927-11	s	CAPACITOR,CERAMIC 100PF/50V CH
C1434	1-164-227-11	s	CAPACITOR,CERAMIC 0.022MF/25V
C1435	1-162-928-11	s	CAPACITOR,CERAMIC 120PF/50V CH
C1436	1-164-227-11	s	CAPACITOR,CERAMIC 0.022MF/25V
C1437	1-162-927-11	s	CAPACITOR,CERAMIC 100PF/50V CH
C1438	1-164-227-11	s	CAPACITOR,CERAMIC 0.022MF/25V
C1439	1-164-227-11	s	CAPACITOR,CERAMIC 0.022MF/25V
C1440	1-107-826-11	s	CAPACITOR,CHIP CERAMIC 0.1MF
C1441	1-107-826-11	s	CAPACITOR,CHIP CERAMIC 0.1MF
C1442	1-126-392-11	s	CAPACITOR,CHIP ELECT100MF/6.3V
C1443	1-135-149-21	s	CAPACITOR TANTALUM 2.2MF/10V
C1444	1-135-146-21	s	CAPACITOR TANTALUM 0.68MF/25V
C1445	1-135-149-21	s	CAPACITOR TANTALUM 2.2MF/10V
C1446	1-162-927-11	s	CAPACITOR,CERAMIC 100PF/50V CH
C1447	1-135-146-21	s	CAPACITOR TANTALUM 0.68MF/25V
C1448	1-164-227-11	s	CAPACITOR,CERAMIC 0.022MF/25V
C1449	1-135-210-11	s	CAPACITOR TANTAL 4.7MF/10V
C1450	1-135-146-21	s	CAPACITOR TANTALUM 0.68MF/25V
C1451	1-135-210-11	s	CAPACITOR TANTAL 4.7MF/10V
C1452	1-135-146-21	s	CAPACITOR TANTALUM 0.68MF/25V
C1453	1-164-227-11	s	CAPACITOR,CERAMIC 0.022MF/25V
C1454	1-164-227-11	s	CAPACITOR,CERAMIC 0.022MF/25V

(DM-114 BOARD)

Ref. No. or Q'ty	Part No.	SP	Description
C1455	1-164-227-11	s	CAPACITOR,CERAMIC 0.022MF/25V
C1456	1-164-227-11	s	CAPACITOR,CERAMIC 0.022MF/25V
C1457	1-107-826-11	s	CAPACITOR,CHIP CERAMIC 0.1MF
C1458	1-104-608-11	s	CAPACITOR,ELECT 33MF/6.3V
C1459	1-115-416-11	s	CAPACITOR,CERAMIC 1000PF/25V
C1460	1-107-826-11	s	CAPACITOR,CHIP CERAMIC 0.1MF
C1461	1-107-826-11	s	CAPACITOR,CHIP CERAMIC 0.1MF
C1462	1-104-608-11	s	CAPACITOR,ELECT 33MF/6.3V
C1463	1-107-826-11	s	CAPACITOR,CHIP CERAMIC 0.1MF
C1464	1-107-826-11	s	CAPACITOR,CHIP CERAMIC 0.1MF
C1501	1-104-608-11	s	CAPACITOR,ELECT 33MF/6.3V
C1502	1-104-608-11	s	CAPACITOR,ELECT 33MF/6.3V
C1503	1-107-826-11	s	CAPACITOR,CHIP CERAMIC 0.1MF
C1504	1-107-826-11	s	CAPACITOR,CHIP CERAMIC 0.1MF
C1505	1-164-227-11	s	CAPACITOR,CERAMIC 0.022MF/25V
C1506	1-104-608-11	s	CAPACITOR,ELECT 33MF/6.3V
C1507	1-164-227-11	s	CAPACITOR,CERAMIC 0.022MF/25V
C1508	1-107-826-11	s	CAPACITOR,CHIP CERAMIC 0.1MF
C1509	1-162-917-11	s	CAPACITOR,CERAMIC 15PF/50V CH
C1510	1-162-919-11	s	CAPACITOR,CERAMIC 22PF/50V CH
C1511	1-162-928-11	s	CAPACITOR,CERAMIC 120PF/50V CH
C1512	1-162-959-11	s	CAPACITOR,CERAMIC 330PF/50V SL
C1513	1-162-915-11	s	CAPACITOR,CERAMIC 10PF/50V CH
C1514	1-162-910-11	s	CAPACITOR,CERAMIC 5PF/50V 1608
C1515	1-162-916-11	s	CAPACITOR,CERAMIC 12PF/50V CH
C1516	1-164-227-11	s	CAPACITOR,CERAMIC 0.022MF/25V
C1517	1 162 916 11	s	CAPACITOR,CERAMIC 12PF/50V CH
C1518	1-162-923-11	s	CAPACITOR,CERAMIC 47PF/50V CH
C1519	1-164-227-11	s	CAPACITOR,CERAMIC 0.022MF/25V
C1521	1-164-227-11	s	CAPACITOR,CERAMIC 0.022MF/25V
C1522	1-164-227-11	s	CAPACITOR,CERAMIC 0.022MF/25V
C1523	1-164-227-11	s	CAPACITOR,CERAMIC 0.022MF/25V
C1524	1-164-227-11	s	CAPACITOR,CERAMIC 0.022MF/25V
C1525	1-126-394-11	s	CAPACITOR ELECT 10MF/16V(CHIP)
C1526	1-164-227-11	s	CAPACITOR,CERAMIC 0.022MF/25V
C1527	1-164-227-11	s	CAPACITOR,CERAMIC 0.022MF/25V
C1528	1-104-608-11	s	CAPACITOR,ELECT 33MF/6.3V
C1529	1-107-826-11	s	CAPACITOR,CHIP CERAMIC 0.1MF
C1530	1-164-227-11	s	CAPACITOR,CERAMIC 0.022MF/25V
C1531	1-164-227-11	s	CAPACITOR,CERAMIC 0.022MF/25V
C1532	1-162-921-11	s	CAPACITOR,CERAMIC 33PF/50V CH
C1533	1-164-227-11	s	CAPACITOR,CERAMIC 0.022MF/25V
C1534	1-164-227-11	s	CAPACITOR,CERAMIC 0.022MF/25V
C1535	1-164-227-11	s	CAPACITOR,CERAMIC 0.022MF/25V
C1536	1-162-921-11	s	CAPACITOR,CERAMIC 33PF/50V CH
C1601	1-126-401-11	s	CAPACITOR,ELECT 1MF/50V(CHIP)
C1602	1-126-401-11	s	CAPACITOR,ELECT 1MF/50V(CHIP)
C1603	1-164-227-11	s	CAPACITOR,CERAMIC 0.022MF/25V
C1604	1-162-915-11	s	CAPACITOR,CERAMIC 10PF/50V CH
C1605	1-162-923-11	s	CAPACITOR,CERAMIC 47PF/50V CH
C1606	1-164-227-11	s	CAPACITOR,CERAMIC 0.022MF/25V
C1607	1-164-227-11	s	CAPACITOR,CERAMIC 0.022MF/25V
C1608	1-164-230-11	s	CAPACITOR,CERAMIC 220PF/50V
C1609	1-126-396-11	s	CAPACITOR ELECT 47MF/16V(CHIP)
C1610	1-162-923-11	s	CAPACITOR,CERAMIC 47PF/50V CH
C1611	1-107-826-11	s	CAPACITOR,CHIP CERAMIC 0.1MF
C1612	1-162-970-11	s	CAPACITOR CERAMIC 0.01MF/25V B
C1613	1-115-416-11	s	CAPACITOR,CERAMIC 1000PF/25V
C1614	1-126-394-11	s	CAPACITOR ELECT 10MF/16V(CHIP)

(DM-114 BOARD)

Ref. No. or Q'ty	Part No.	SP	Description
C1615	1-126-401-11	s	CAPACITOR,ELECT 1MF/50V(CHIP)
C1616	1-107-826-11	s	CAPACITOR,CHIP CERAMIC 0.1MF
C1617	1-107-826-11	s	CAPACITOR,CHIP CERAMIC 0.1MF
C1618	1-126-401-11	s	CAPACITOR,ELECT 1MF/50V(CHIP)
C1619	1-107-826-11	s	CAPACITOR,CHIP CERAMIC 0.1MF
C1620	1-107-826-11	s	CAPACITOR,CHIP CERAMIC 0.1MF
C1621	1-126-392-11	s	CAPACITOR,CHIP ELECT100MF/6.3V
C1622	1-162-927-11	s	CAPACITOR,CERAMIC 100PF/50V CH
C1623	1-164-227-11	s	CAPACITOR,CERAMIC 0.022MF/25V
C1624	1-164-227-11	s	CAPACITOR,CERAMIC 0.022MF/25V
C1625	1-162-923-11	s	CAPACITOR,CERAMIC 47PF/50V CH
C1626	1-164-227-11	s	CAPACITOR,CERAMIC 0.022MF/25V
C1627	1-164-315-11	s	CAPACITOR,CERAMIC 470PF/50V CH
C1628	1-162-970-11	s	CAPACITOR CERAMIC 0.01MF/25V B
C1629	1-164-227-11	s	CAPACITOR,CERAMIC 0.022MF/25V
C1630	1-164-227-11	s	CAPACITOR,CERAMIC 0.022MF/25V
C1631	1-162-927-11	s	CAPACITOR,CERAMIC 100PF/50V CH
C1632	1-126-392-11	s	CAPACITOR,CHIP ELECT100MF/6.3V
C1633	1-164-227-11	s	CAPACITOR,CERAMIC 0.022MF/25V
C1634	1-162-927-11	s	CAPACITOR,CERAMIC 100PF/50V CH
C1635	1-162-927-11	s	CAPACITOR,CERAMIC 100PF/50V CH
C1636	1-164-227-11	s	CAPACITOR,CERAMIC 0.022MF/25V
C1637	1-162-928-11	s	CAPACITOR,CERAMIC 120PF/50V CH
C1638	1-164-227-11	s	CAPACITOR,CERAMIC 0.022MF/25V
C1639	1-162-927-11	s	CAPACITOR,CERAMIC 100PF/50V CH
C1640	1-164-227-11	s	CAPACITOR,CERAMIC 0.022MF/25V
C1641	1 107 826 11	s	CAPACITOR,CHIP CERAMIC 0.1MF
C1642	1-107-826-11	s	CAPACITOR,CHIP CERAMIC 0.1MF
C1643	1-107-826-11	s	CAPACITOR,CHIP CERAMIC 0.1MF
C1644	1-126-392-11	s	CAPACITOR,CHIP ELECT100MF/6.3V
C1645	1-135-149-21	s	CAPACITOR TANTALUM 2.2MF/10V
C1646	1-135-146-21	s	CAPACITOR TANTALUM 0.68MF/25V
C1647	1-162-927-11	s	CAPACITOR,CERAMIC 100PF/50V CH
C1648	1-135-149-21	s	CAPACITOR TANTALUM 2.2MF/10V
C1649	1-135-146-21	s	CAPACITOR TANTALUM 0.68MF/25V
C1650	1-135-210-11	s	CAPACITOR TANTAL 4.7MF/10V
C1651	1-107-826-11	s	CAPACITOR,CHIP CERAMIC 0.1MF
C1652	1-107-826-11	s	CAPACITOR,CHIP CERAMIC 0.1MF
C1653	1-135-210-11	s	CAPACITOR TANTAL 4.7MF/10V
C1654	1-164-227-11	s	CAPACITOR,CERAMIC 0.022MF/25V
C1655	1-107-826-11	s	CAPACITOR,CHIP CERAMIC 0.1MF
C1656	1-164-227-11	s	CAPACITOR,CERAMIC 0.022MF/25V
C1657	1-164-227-11	s	CAPACITOR,CERAMIC 0.022MF/25V
C1658	1-107-826-11	s	CAPACITOR,CHIP CERAMIC 0.1MF
C1659	1-107-826-11	s	CAPACITOR,CHIP CERAMIC 0.1MF
C1660	1-115-416-11	s	CAPACITOR,CERAMIC 1000PF/25V
C1661	1-104-608-11	s	CAPACITOR,ELECT 33MF/6.3V
C1662	1-104-608-11	s	CAPACITOR,ELECT 33MF/6.3V
C1663	1-107-826-11	s	CAPACITOR,CHIP CERAMIC 0.1MF
C1664	1-107-826-11	s	CAPACITOR,CHIP CERAMIC 0.1MF
C1665	1-107-826-11	s	CAPACITOR,CHIP CERAMIC 0.1MF
C1666	1-164-227-11	s	CAPACITOR,CERAMIC 0.022MF/25V
C1667	1-164-227-11	s	CAPACITOR,CERAMIC 0.022MF/25V
C1701	1-164-227-11	s	CAPACITOR,CERAMIC 0.022MF/25V
C1702	1-164-227-11	s	CAPACITOR,CERAMIC 0.022MF/25V
C1703	1-164-227-11	s	CAPACITOR,CERAMIC 0.022MF/25V
C1704	1-164-227-11	s	CAPACITOR,CERAMIC 0.022MF/25V
C1705	1-164-227-11	s	CAPACITOR,CERAMIC 0.022MF/25V
C1706	1-164-227-11	s	CAPACITOR,CERAMIC 0.022MF/25V

(DM-114 BOARD)

Ref. No. or Q'ty	Part No.	SP	Description
C1707	1-164-227-11	s	CAPACITOR,CERAMIC 0.022MF/25V
C1708	1-164-227-11	s	CAPACITOR,CERAMIC 0.022MF/25V
C1709	1-164-227-11	s	CAPACITOR,CERAMIC 0.022MF/25V
C1710	1-164-227-11	s	CAPACITOR,CERAMIC 0.022MF/25V
C1711	1-164-227-11	s	CAPACITOR,CERAMIC 0.022MF/25V
C1712	1-126-392-11	s	CAPACITOR,CHIP ELECT100MF/6.3V
C1713	1-164-227-11	s	CAPACITOR,CERAMIC 0.022MF/25V
C1714	1-126-392-11	s	CAPACITOR,CHIP ELECT100MF/6.3V
C1715	1-164-227-11	s	CAPACITOR,CERAMIC 0.022MF/25V
C1716	1-162-925-11	s	CAPACITOR,CERAMIC 68PF/50V CH
C1717	1-162-925-11	s	CAPACITOR,CERAMIC 68PF/50V CH
C1718	1-162-925-11	s	CAPACITOR,CERAMIC 68PF/50V CH
C1719	1-162-925-11	s	CAPACITOR,CERAMIC 68PF/50V CH
C1720	1-162-925-11	s	CAPACITOR,CERAMIC 68PF/50V CH
C1721	1-162-925-11	s	CAPACITOR,CERAMIC 68PF/50V CH
C1722	1-162-925-11	s	CAPACITOR,CERAMIC 68PF/50V CH
C1723	1-162-925-11	s	CAPACITOR,CERAMIC 68PF/50V CH
C1724	1-162-925-11	s	CAPACITOR,CERAMIC 68PF/50V CH
C1725	1-162-925-11	s	CAPACITOR,CERAMIC 68PF/50V CH
C1726	1-162-925-11	s	CAPACITOR,CERAMIC 68PF/50V CH
C1727	1-162-925-11	s	CAPACITOR,CERAMIC 68PF/50V CH
C1728	1-162-925-11	s	CAPACITOR,CERAMIC 68PF/50V CH
C1729	1-162-925-11	s	CAPACITOR,CERAMIC 68PF/50V CH
C1730	1-162-925-11	s	CAPACITOR,CERAMIC 68PF/50V CH
C1731	1-164-227-11	s	CAPACITOR,CERAMIC 0.022MF/25V
C1732	1-164-227-11	s	CAPACITOR,CERAMIC 0.022MF/25V
C1733	1 164 227 11	s	CAPACITOR,CERAMIC 0.022MF/25V
C1734	1-164-227-11	s	CAPACITOR,CERAMIC 0.022MF/25V
C1735	1-164-227-11	s	CAPACITOR,CERAMIC 0.022MF/25V
C1736	1-164-227-11	s	CAPACITOR,CERAMIC 0.022MF/25V
C1737	1-164-227-11	s	CAPACITOR,CERAMIC 0.022MF/25V
C1738	1-164-227-11	s	CAPACITOR,CERAMIC 0.022MF/25V
C1739	1-164-227-11	s	CAPACITOR,CERAMIC 0.022MF/25V
C1740	1-104-851-11	s	CAPACITOR,TANTALUM 10MF/10V
C1741	1-164-227-11	s	CAPACITOR,CERAMIC 0.022MF/25V
C1742	1-164-227-11	s	CAPACITOR,CERAMIC 0.022MF/25V
C1743	1-107-826-11	s	CAPACITOR,CHIP CERAMIC 0.1MF
C1800	1-164-227-11	s	CAPACITOR,CERAMIC 0.022MF/25V
C1801	1-107-826-11	s	CAPACITOR,CHIP CERAMIC 0.1MF
C1802	1-107-826-11	s	CAPACITOR,CHIP CERAMIC 0.1MF
C1803	1-162-927-11	s	CAPACITOR,CERAMIC 100PF/50V CH
C1804	1-104-608-11	s	CAPACITOR,ELECT 33MF/6.3V
C1805	1-104-608-11	s	CAPACITOR,ELECT 33MF/6.3V
C1806	1-107-826-11	s	CAPACITOR,CHIP CERAMIC 0.1MF
C1807	1-107-826-11	s	CAPACITOR,CHIP CERAMIC 0.1MF
C1808	1-126-394-11	s	CAPACITOR ELECT 10MF/16V(CHIP)
C1809	1-164-227-11	s	CAPACITOR,CERAMIC 0.022MF/25V
C1810	1-162-927-11	s	CAPACITOR,CERAMIC 100PF/50V CH
C1811	1-162-919-11	s	CAPACITOR,CERAMIC 22PF/50V CH
C1812	1-162-919-11	s	CAPACITOR,CERAMIC 22PF/50V CH
C1813	1-104-608-11	s	CAPACITOR,ELECT 33MF/6.3V
C1814	1-162-919-11	s	CAPACITOR,CERAMIC 22PF/50V CH
C1815	1-107-826-11	s	CAPACITOR,CHIP CERAMIC 0.1MF
C1816	1-162-925-11	s	CAPACITOR,CERAMIC 68PF/50V CH
C1817	1-164-227-11	s	CAPACITOR,CERAMIC 0.022MF/25V
C1818	1-162-919-11	s	CAPACITOR,CERAMIC 22PF/50V CH
C1819	1-104-608-11	s	CAPACITOR,ELECT 33MF/6.3V
C1820	1-164-227-11	s	CAPACITOR,CERAMIC 0.022MF/25V
C1821	1-164-227-11	s	CAPACITOR,CERAMIC 0.022MF/25V

(DM-114 BOARD)

Ref. No. or Q'ty	Part No.	SP	Description
C1822	1-107-826-11	s	CAPACITOR,CHIP CERAMIC 0.1MF
C1824	1-126-392-11	s	CAPACITOR,CHIP ELECT100MF/6.3V
C1825	1-164-227-11	s	CAPACITOR,CERAMIC 0.022MF/25V
C1826	1-164-227-11	s	CAPACITOR,CERAMIC 0.022MF/25V
C1827	1-104-608-11	s	CAPACITOR,ELECT 33MF/6.3V
C1828	1-107-826-11	s	CAPACITOR,CHIP CERAMIC 0.1MF
C1829	1-164-227-11	s	CAPACITOR,CERAMIC 0.022MF/25V
C1830	1-164-227-11	s	CAPACITOR,CERAMIC 0.022MF/25V
C1831	1-164-227-11	s	CAPACITOR,CERAMIC 0.022MF/25V
C1832	1-126-392-11	s	CAPACITOR,CHIP ELECT100MF/6.3V
C1833	1-162-927-11	s	CAPACITOR,CERAMIC 100PF/50V CH
C1834	1-104-852-11	s	CAPACITOR,TANTALUM 22MF/10V
C1835	1-164-227-11	s	CAPACITOR,CERAMIC 0.022MF/25V
C1837	1-164-227-11	s	CAPACITOR,CERAMIC 0.022MF/25V
C1838	1-164-227-11	s	CAPACITOR,CERAMIC 0.022MF/25V
C1839	1-107-826-11	s	CAPACITOR,CHIP CERAMIC 0.1MF
C1840	1-104-852-11	s	CAPACITOR,TANTALUM 22MF/10V
C1841	1-164-227-11	s	CAPACITOR,CERAMIC 0.022MF/25V
C1842	1-164-227-11	s	CAPACITOR,CERAMIC 0.022MF/25V
C1843	1-164-227-11	s	CAPACITOR,CERAMIC 0.022MF/25V
C1844	1-104-608-11	s	CAPACITOR,ELECT 33MF/6.3V
C1845	1-107-826-11	s	CAPACITOR,CHIP CERAMIC 0.1MF
C1846	1-164-227-11	s	CAPACITOR,CERAMIC 0.022MF/25V
C1847	1-135-180-21	s	CAPACITOR TANTALUM 3.3MF/10V
C1848	1-135-180-21	s	CAPACITOR TANTALUM 3.3MF/10V
C1849	1-107-826-11	s	CAPACITOR,CHIP CERAMIC 0.1MF
C1850	1 135 072 21	s	CAPACITOR,TANTALUM 0.22MF/35V
C1851	1-164-227-11	s	CAPACITOR,CERAMIC 0.022MF/25V
C1852	1-126-394-11	s	CAPACITOR ELECT 10MF/16V(CHIP)
C1853	1-164-227-11	s	CAPACITOR,CERAMIC 0.022MF/25V
C1854	1-107-826-11	s	CAPACITOR,CHIP CERAMIC 0.1MF
C1855	1-164-227-11	s	CAPACITOR,CERAMIC 0.022MF/25V
C1856	1-107-826-11	s	CAPACITOR,CHIP CERAMIC 0.1MF
C1857	1-107-826-11	s	CAPACITOR,CHIP CERAMIC 0.1MF
C1858	1-164-227-11	s	CAPACITOR,CERAMIC 0.022MF/25V
C1859	1-107-826-11	s	CAPACITOR,CHIP CERAMIC 0.1MF
C1860	1-162-921-11	s	CAPACITOR,CERAMIC 33PF/50V CH
C1861	1-164-227-11	s	CAPACITOR,CERAMIC 0.022MF/25V
C1862	1-107-826-11	s	CAPACITOR,CHIP CERAMIC 0.1MF
C1863	1-107-826-11	s	CAPACITOR,CHIP CERAMIC 0.1MF
C1864	1-164-227-11	s	CAPACITOR,CERAMIC 0.022MF/25V
C1865	1-162-921-11	s	CAPACITOR,CERAMIC 33PF/50V CH
C1866	1-107-826-11	s	CAPACITOR,CHIP CERAMIC 0.1MF
C1867	1-107-826-11	s	CAPACITOR,CHIP CERAMIC 0.1MF
C1868	1-107-826-11	s	CAPACITOR,CHIP CERAMIC 0.1MF
C1869	1-107-826-11	s	CAPACITOR,CHIP CERAMIC 0.1MF
C1870	1-162-970-11	s	CAPACITOR CERAMIC 0.01MF/25V B
C1871	1-164-227-11	s	CAPACITOR,CERAMIC 0.022MF/25V
C1872	1-107-826-11	s	CAPACITOR,CHIP CERAMIC 0.1MF
C1873	1-104-608-11	s	CAPACITOR,ELECT 33MF/6.3V
C1874	1-164-230-11	s	CAPACITOR,CERAMIC 220PF/50V
C1875	1-164-315-11	s	CAPACITOR,CERAMIC 470PF/50V CH
C1876	1-162-927-11	s	CAPACITOR,CERAMIC 100PF/50V CH
C1877	1-164-227-11	s	CAPACITOR,CERAMIC 0.022MF/25V
C1878	1-164-227-11	s	CAPACITOR,CERAMIC 0.022MF/25V
C1879	1-164-227-11	s	CAPACITOR,CERAMIC 0.022MF/25V
C1880	1-164-227-11	s	CAPACITOR,CERAMIC 0.022MF/25V
C1881	1-164-227-11	s	CAPACITOR,CERAMIC 0.022MF/25V
C1882	1-164-227-11	s	CAPACITOR,CERAMIC 0.022MF/25V

(DM-114 BOARD)

Ref. No. or Q'ty	Part No.	SP	Description	
CN1	1-580-057-11	o	PIN,CONNECTOR 4P	
CN100	1-784-200-11	o	CONNECTOR, BOARD TO BOARD 140P	
D101	8-719-941-23	s	DIODE DA204U	
D301	8-719-941-23	s	DIODE DA204U	
D501	8-719-024-81	s	DIODE 1SS300-TE85L	
D502	8-719-024-81	s	DIODE 1SS300-TE85L	
D503	8-719-941-23	s	DIODE DA204U	
D504	8-719-404-35	s	DIODE MA141WK	
D505	8-719-029-55	s	ZENER DIODE RD2.0UH-T1	
D701	8-719-024-81	s	DIODE 1SS300-TE85L	
D702	8-719-941-23	s	DIODE DA204U	
D703	8-719-404-35	s	DIODE MA141WK	
D704	8-719-029-55	s	ZENER DIODE RD2.0UH-T1	
D901	8-719-991-27	s	LED CL-170G-CD	
D902	8-719-941-04	s	DIODE SB007-03CP	
D903	8-719-029-55	s	ZENER DIODE RD2.0UH-T1	
D904	8-719-029-55	s	ZENER DIODE RD2.0UH-T1	
D905	8-719-029-55	s	ZENER DIODE RD2.0UH-T1	
D906	8-719-029-55	s	ZENER DIODE RD2.0UH-T1	
D907	8-719-029-55	s	ZENER DIODE RD2.0UH-T1	
D908	8-719-029-55	s	ZENER DIODE RD2.0UH-T1	
D1101	8-719-941-23	s	DIODE DA204U	
D1103	8-719-404-35	s	DIODE MA141WK	
D1104	8-719-941-23	s	DIODE DA204U	
D1201	8-719-941-23	s	DIODE DA204U	
D1204	8-719-941-23	s	DIODE DA204U	
D1301	8 719 941 23	s	DIODE DA204U	
D1401	8-719-941-23	s	DIODE DA204U	
D1402	8-719-941-23	s	DIODE DA204U	
D1405	8-719-041-39	s	DIODE KV1470	(5MA)
D1406	8-719-041-39	s	DIODE KV1470	(5MA)
D1501	8-719-941-23	s	DIODE DA204U	
D1502	8-719-024-81	s	DIODE 1SS300-TE85L	
D1601	8-719-941-23	s	DIODE DA204U	
D1602	8-719-941-23	s	DIODE DA204U	
D1603	8-719-041-39	s	DIODE KV1470	(5MA)
D1604	8-719-041-39	s	DIODE KV1470	(5MA)
D1701	8-719-404-35	s	DIODE MA141WK	
D1702	8-719-024-81	s	DIODE 1SS300-TE85L	
D1703	8-719-024-81	s	DIODE 1SS300-TE85L	
D1704	8-719-024-81	s	DIODE 1SS300-TE85L	
D1705	8-719-024-81	s	DIODE 1SS300-TE85L	
D1801	8-719-024-81	s	DIODE 1SS300-TE85L	
D1802	8-719-991-27	s	LED CL-170G-CD	
D1803	8-719-941-23	s	DIODE DA204U	
D1808	8-719-941-86	s	DIODE DAN202U	
D1809	8-719-941-09	s	DIODE DAP202U	
D1810	8-719-941-09	s	DIODE DAP202U	
D1910	8-719-938-72	s	DIODE SB01-05CP	(RECTI)
FL101	1-416-645-11	s	DELAY LINE	
FL103	1-416-478-11	s	DELAY LINE	
FL301	1-416-646-11	s	DELAY LINE	
FL303	1-416-480-11	s	DELAY LINE	
FL502	1-234-001-11	s	FILTER, LOW PASS	
FL503	1-234-000-11	s	FILTER, LOW PASS	
FL504	1-234-010-11	s	FILTER, LOW PASS	
FL702	1-234-008-11	s	FILTER, LOW PASS	
FL703	1-234-004-11	s	FILTER, LOW PASS	

(DM-114 BOARD)

Ref. No. or Q'ty	Part No.	SP	Description	
FL1101	1-234-009-11	s	FILTER, LOW PASS	
FL1201	1-234-003-11	s	FILTER, LOW PASS	
IC101	8-752-052-75	s	IC CXA1479Q	
IC102	8-759-523-02	s	IC TC74HC4053AFT(EL)	
IC103	8-759-112-53	s	IC UPC1663G	
IC104	8-759-058-64	s	IC TC7S32FU-TE85R	
IC105	8-752-052-73	s	IC CXA1451M	
IC106	8-759-523-01	s	IC TC74HC4052AFT(EL)	
IC108	8-759-287-54	s	IC TL084CPW (E20)	
IC109	8-759-523-78	s	IC TC74VHC00FT(EL)	
IC110	8-759-058-62	s	IC TC7S08FU-TE85R	
IC111	8-759-058-62	s	IC TC7S08FU-TE85R	
IC301	8-759-242-78	s	IC TC7W02F	
IC302	8-752-052-75	s	IC CXA1479Q	
IC303	8-759-927-46	s	IC SN74HC00ANS	
IC304	8-759-523-02	s	IC TC74HC4053AFT(EL)	
IC305	8-752-052-73	s	IC CXA1451M	
IC308	8-759-287-54	s	IC TL084CPW (E20)	
IC309	8-759-082-58	s	IC TC7W08FU	
IC310	8-759-058-56	s	IC TC7S02FU(TE85R)	
IC311	8-759-058-62	s	IC TC7S08FU-TE85R	
IC501	8-759-058-58	s	IC TC7S04FU-TE85R	
IC502	8-759-082-59	s	IC TC7W32FU	
IC503	8-759-359-66	s	IC TL082CPW (E05)	
IC504	8-752-061-02	s	IC CXA1450M	
IC505	8-752-052-48	s	IC CXA1370Q	
IC506	8 759 058 58	s	IC TC7S04FU TE85R	
IC508	1-810-128-11	s	IC BP-015	
IC511	8-752-052-73	s	IC CXA1451M	
IC512	8-759-260-53	s	IC LM2903PW-E05	
IC513	8-759-012-00	s	IC MC10H116M	
IC701	8-759-082-59	s	IC TC7W32FU	
IC702	8-752-052-48	s	IC CXA1370Q	
IC703	1-810-128-11	s	IC BP-015	
IC704	8-759-260-53	s	IC LM2903PW-E05	
IC705	8-752-052-73	s	IC CXA1451M	
IC706	8-759-012-00	s	IC MC10H116M	
IC710	8-759-058-62	s	IC TC7S08FU-TE85R	
IC901	8-759-523-02	s	IC TC74HC4053AFT(EL)	
IC902	8-759-523-02	s	IC TC74HC4053AFT(EL)	
IC903	8-759-523-02	s	IC TC74HC4053AFT(EL)	
IC904	8-759-082-61	s	IC TC4W53FU	
IC905	8-759-635-27	s	IC M62352GP	
IC906	8-759-635-27	s	IC M62352GP	
IC907	8-759-523-03	s	IC TC74HC4066AFT(EL)	
IC908	8-759-263-32	s	IC UPD78011BGC-608-AB8	
IC909	8-759-488-17	s	IC BR93LC46F-E2	
IC910	8-759-485-79	s	IC TC7SET08FU	(TE85L)
IC911	8-759-388-62	s	IC NJU7062M (TE2)	
IC913	8-759-172-41	s	IC L78M09T-TL	
IC914	8-759-337-40	s	IC NJM2904V(TE2)	
IC915	8-759-337-40	s	IC NJM2904V(TE2)	
IC916	8-759-337-40	s	IC NJM2904V(TE2)	
IC917	8-759-710-88	s	IC NJM431U	
IC918	8-759-710-88	s	IC NJM431U	
IC919	8-759-710-88	s	IC NJM431U	
IC920	8-729-045-28	s	TRANSISTOR SI4532DY-T1	
IC921	8-729-045-28	s	TRANSISTOR SI4532DY-T1	

(DM-114 BOARD)

Ref. No. or Q'ty	Part No.	SP	Description
IC922	8-729-045-28	s	TRANSISTOR SI4532DY-T1
IC1101	8-759-082-57	s	IC TC7W04FU
IC1102	8-759-702-08	s	IC NJM360M
IC1103	8-759-287-54	s	IC TL084CPW (E20)
IC1104	8-759-082-60	s	IC TC7S66FU
IC1105	8-759-082-61	s	IC TC4W53FU
IC1106	8-759-082-58	s	IC TC7W08FU
IC1107	8-759-337-40	s	IC NJM2904V(TE2)
IC1108	8-752-376-32	s	IC CXD2310AR
IC1109	8-752-362-70	s	IC CXD101-106Q
IC1110	8-759-337-40	s	IC NJM2904V(TE2)
IC1111	8-759-710-88	s	IC NJM431U
IC1112	8-759-710-88	s	IC NJM431U
IC1113	8-759-710-88	s	IC NJM431U
IC1114	8-759-209-90	s	IC TC4S71F
IC1201	8-759-287-54	s	IC TL084CPW (E20)
IC1202	8-759-082-60	s	IC TC7S66FU
IC1203	8-759-082-61	s	IC TC4W53FU
IC1207	8-752-376-32	s	IC CXD2310AR
IC1208	8-752-362-70	s	IC CXD101-106Q
IC1214	8-759-209-90	s	IC TC4S71F
IC1301	8-752-358-08	s	IC CXD2221Q
IC1302	8-759-359-66	s	IC TL082CPW (E05)
IC1303	8-759-082-60	s	IC TC7S66FU
IC1304	8-759-973-82	s	IC TLC549IPS
IC1305	8-759-395-37	s	IC XRD7523AID-JTR
IC1306	8 759 359 66	s	IC TL082CPW (E05)
IC1307	8-759-082-59	s	IC TC7W32FU
IC1402	8-759-287-54	s	IC TL084CPW (E20)
IC1404	8-759-907-81	s	IC SN74LS221N(S)
IC1405	8-759-702-08	s	IC NJM360M
IC1406	8-759-058-62	s	IC TC7S08FU-TE85R
IC1407	8-759-523-03	s	IC TC74HC4066AFT(EL)
IC1408	8-759-242-78	s	IC TC7W02F
IC1409	8-759-287-54	s	IC TL084CPW (E20)
IC1410	8-759-196-93	s	IC TC7SH00FU-TE85R
IC1411	8-759-196-93	s	IC TC7SH00FU-TE85R
IC1501	8-752-358-08	s	IC CXD2221Q
IC1502	8-759-287-54	s	IC TL084CPW (E20)
IC1503	8-759-082-60	s	IC TC7S66FU
IC1504	8-759-973-82	s	IC TLC549IPS
IC1505	8-759-395-37	s	IC XRD7523AID-JTR
IC1506	8-759-359-66	s	IC TL082CPW (E05)
IC1507	8-759-196-93	s	IC TC7SH00FU-TE85R
IC1510	8-759-196-93	s	IC TC7SH00FU-TE85R
IC1601	8-759-184-64	s	IC TC4W66FU
IC1603	8-759-260-53	s	IC LM2903PW-E05
IC1604	8-759-082-61	s	IC TC4W53FU
IC1605	8-759-287-54	s	IC TL084CPW (E20)
IC1606	8-759-523-03	s	IC TC74HC4066AFT(EL)
IC1608	8-759-702-08	s	IC NJM360M
IC1609	8-759-907-81	s	IC SN74LS221N(S)
IC1610	8-759-058-62	s	IC TC7S08FU-TE85R
IC1611	8-759-242-78	s	IC TC7W02F
IC1612	8-759-359-66	s	IC TL082CPW (E05)
IC1614	8-759-524-19	s	IC TC74VHC164FT(EL)
IC1701	8-759-058-64	s	IC TC7S32FU-TE85R
IC1702	8-759-194-81	s	IC CXD8395AQ
IC1703	8-759-194-81	s	IC CXD8395AQ

(DM-114 BOARD)

Ref. No. or Q'ty	Part No.	SP	Description
IC1704	8-752-359-55	s	IC CXK48324R
IC1705	8-752-359-55	s	IC CXK48324R
IC1706	8-759-277-63	s	IC TC7W14FU (TE12R)
IC1707	8-759-523-94	s	IC TC74VHC32FT(EL)
IC1708	8-752-341-32	s	IC CXD2209Q
IC1709	8-759-524-22	s	IC TC74VHC175FT(EL)
IC1710	8-759-523-95	s	IC TC74VHC74FT(EL)
IC1711	8-759-524-18	s	IC TC74VHC163FT(EL)
IC1712	8-752-341-32	s	IC CXD2209Q
IC1713	8-752-341-32	s	IC CXD2209Q
IC1714	8-759-399-52	s	IC CXD8935BQ
IC1715	8-759-277-63	s	IC TC7W14FU (TE12R)
IC1716	8-759-524-10	s	IC TC74VHC157FT (EL)
IC1717	8-759-196-96	s	IC TC7SH08FU (TE85R)
IC1800	8-759-082-58	s	IC TC7W08FU
IC1801	8-759-491-51	s	IC TC74VHCT245AFT(EL)
IC1802	8-759-490-41	s	IC TC74VHCT541AFT(EL)
IC1803	8-759-082-58	s	IC TC7W08FU
IC1804	8-759-523-84	s	IC TC74VHC14FT (EL)
IC1805	8-759-387-54	s	IC S-80727-SN-DQ-T1
IC1806	8-759-058-62	s	IC TC7S08FU-TE85R
IC1807	8-759-083-94	s	IC TC7W74FU
IC1808	8-759-582-56	s	IC UPD78014FGC-639-AB8
IC1809	8-759-702-08	s	IC NJM360M
IC1810	8-759-195-81	s	IC TC7S86FU
IC1811	8-759-058-62	s	IC TC7S08FU-TE85R
IC1812	8 759 488 17	s	IC BR93LC46F E2
IC1813	8-759-395-37	s	IC XRD7523AID-JTR
IC1814	8-759-295-09	s	IC TLC2932IPW
IC1815	8-759-710-88	s	IC NJM431U
IC1816	8-759-195-81	s	IC TC7S86FU
IC1817	8-759-278-58	s	IC NJM4558V (TE2)
IC1818	8-759-082-60	s	IC TC7S66FU
IC1819	8-759-359-66	s	IC TL082CPW (E05)
IC1820	8-759-260-53	s	IC LM2903PW-E05
IC1821	8-759-082-57	s	IC TC7W04FU
IC1822	8-759-058-62	s	IC TC7S08FU-TE85R
IC1823	8-759-523-97	s	IC TC74VHC123AFT(EL)
IC1824	8-752-356-05	s	IC CXD206-104Q
IC1825	8-759-524-50	s	IC TC74VHC541FT(EL)
IC1826	8-759-524-50	s	IC TC74VHC541FT(EL)
IC1827	8-759-359-66	s	IC TL082CPW (E05)
IC1828	8-759-523-97	s	IC TC74VHC123AFT(EL)
IC1829	8-752-360-90	s	IC CXD303-101Q
IC1830	8-752-355-09	s	IC CXD104-114Q
IC1831	8-759-524-52	s	IC TC74VHC574FT(EL)
IC1832	8-759-524-52	s	IC TC74VHC574FT(EL)
IC1833	8-759-907-81	s	IC SN74LS221N(S)
IC1834	8-759-058-64	s	IC TC7S32FU-TE85R
L102	1-410-381-11	s	CHIP INDUCTOR 10UH (3225)
L103	1-410-369-11	s	CHIP INDUCTOR 1.0UH (3225)
L104	1-410-383-31	s	INDUCTOR,CHIP 15UH (3225)
L105	1-410-372-21	s	CHIP INDUCTOR 1.8UH (3225)
L106	1-410-380-31	s	INDUCTOR,CHIP 8.2UH (3225)
L107	1-410-378-11	s	INDUCTOR,CHIP 5.6UH (3225)
L108	1-410-379-31	s	CHIP INDUCTOR 6.8UH (3225)
L109	1-410-378-11	s	INDUCTOR,CHIP 5.6UH (3225)
L110	1-410-379-31	s	CHIP INDUCTOR 6.8UH (3225)
L111	1-410-380-31	s	INDUCTOR,CHIP 8.2UH (3225)

(DM-114 BOARD)

Ref. No. or Q'ty	Part No.	SP	Description
L112	1-410-381-11	s	CHIP INDUCTOR 10UH (3225)
L113	1-410-380-31	s	INDUCTOR,CHIP 8.2UH (3225)
L114	1-410-377-31	s	INDUCTOR,CHIP 4.7UH (3225)
L115	1-410-380-31	s	INDUCTOR,CHIP 8.2UH (3225)
L116	1-410-378-11	s	INDUCTOR,CHIP 5.6UH (3225)
L117	1-414-398-11	s	INDUCTOR (SMD) 10UH
L118	1-414-398-11	s	INDUCTOR (SMD) 10UH
L119	1-414-398-11	s	INDUCTOR (SMD) 10UH
L120	1-414-398-11	s	INDUCTOR (SMD) 10UH
L121	1-410-371-41	s	CHIP INDUCTOR 1.5UH
L122	1-410-371-41	s	CHIP INDUCTOR 1.5UH
L123	1-414-398-11	s	INDUCTOR (SMD) 10UH
L124	1-410-382-31	s	INDUCTOR,CHIP 12UH (3225)
L125	1-412-203-11	s	MICRO INDUCTOR 560UH
L301	1-414-398-11	s	INDUCTOR (SMD) 10UH
L302	1-410-379-31	s	CHIP INDUCTOR 6.8UH (3225)
L303	1-410-380-31	s	INDUCTOR,CHIP 8.2UH (3225)
L304	1-414-398-11	s	INDUCTOR (SMD) 10UH
L305	1-410-379-31	s	CHIP INDUCTOR 6.8UH (3225)
L306	1-410-380-31	s	INDUCTOR,CHIP 8.2UH (3225)
L307	1-412-282-41	s	INDUCTOR INDACTOR 470UH (3225)
L308	1-412-282-41	s	INDUCTOR INDACTOR 470UH (3225)
L309	1-410-380-31	s	INDUCTOR,CHIP 8.2UH (3225)
L310	1-410-380-31	s	INDUCTOR,CHIP 8.2UH (3225)
L311	1-414-398-11	s	INDUCTOR (SMD) 10UH
L312	1-414-398-11	s	INDUCTOR (SMD) 10UH
L313	1 410 380 31	s	INDUCTOR,CHIP 8.2UH (3225)
L314	1-410-380-31	s	INDUCTOR,CHIP 8.2UH (3225)
L315	1-410-371-41	s	CHIP INDUCTOR 1.5UH
L316	1-410-371-41	s	CHIP INDUCTOR 1.5UH
L317	1-414-398-11	s	INDUCTOR (SMD) 10UH
L318	1-410-383-31	s	INDUCTOR,CHIP 15UH (3225)
L319	1-412-203-11	s	MICRO INDUCTOR 560UH
L501	1-414-400-11	s	INDUCTOR, 22UH
L502	1-414-400-11	s	INDUCTOR, 22UH
L503	1-412-282-41	s	INDUCTOR INDACTOR 470UH (3225)
L504	1-412-206-11	s	MICRO INDUCTOR 1MMH
L505	1-414-400-11	s	INDUCTOR, 22UH
L506	1-414-404-11	s	INDUCTOR (SMD) 100UH
L507	1-414-404-11	s	INDUCTOR (SMD) 100UH
L508	1-414-404-11	s	INDUCTOR (SMD) 100UH
L509	1-414-400-11	s	INDUCTOR, 22UH
L510	1-414-404-11	s	INDUCTOR (SMD) 100UH
L511	1-414-396-21	s	INDUCTOR (SMD) 4.7UH
L512	1-414-398-11	s	INDUCTOR (SMD) 10UH
L513	1-414-404-11	s	INDUCTOR (SMD) 100UH
L514	1-414-404-11	s	INDUCTOR (SMD) 100UH
L701	1-414-400-11	s	INDUCTOR, 22UH
L702	1-414-404-11	s	INDUCTOR (SMD) 100UH
L703	1-414-404-11	s	INDUCTOR (SMD) 100UH
L704	1-414-404-11	s	INDUCTOR (SMD) 100UH
L705	1-414-404-11	s	INDUCTOR (SMD) 100UH
L706	1-414-404-11	s	INDUCTOR (SMD) 100UH
L707	1-414-396-21	s	INDUCTOR (SMD) 4.7UH
L708	1-414-398-11	s	INDUCTOR (SMD) 10UH
L901	1-409-579-11	s	COIL, CHOKE 8.2UH
L902	1-409-579-11	s	COIL, CHOKE 8.2UH
L903	1-409-579-11	s	COIL, CHOKE 8.2UH
L904	1-409-579-11	s	COIL, CHOKE 8.2UH

(DM-114 BOARD)

Ref. No. or Q'ty	Part No.	SP	Description
L905	1-409-579-11	s	COIL, CHOKE 8.2UH
L906	1-409-579-11	s	COIL, CHOKE 8.2UH
L1101	1-412-193-11	s	MICRO INDUCTOR 68UH
L1102	1-414-400-11	s	INDUCTOR, 22UH
L1103	1-412-196-11	s	MICRO INDUCTOR 150UH
L1104	1-414-400-11	s	INDUCTOR, 22UH
L1105	1-414-400-11	s	INDUCTOR, 22UH
L1106	1-414-400-11	s	INDUCTOR, 22UH
L1201	1-414-400-11	s	INDUCTOR, 22UH
L1202	1-412-196-11	s	MICRO INDUCTOR 150UH
L1203	1-414-400-11	s	INDUCTOR, 22UH
L1204	1-414-400-11	s	INDUCTOR, 22UH
L1205	1-414-400-11	s	INDUCTOR, 22UH
L1301	1-414-402-11	s	INDUCTOR (SMD) 47UH
L1302	1-414-402-11	s	INDUCTOR (SMD) 47UH
L1303	1-412-280-31	s	CHIP INDUCTOR 330UH (3225)
L1304	1-412-204-11	s	MICRO INDUCTOR 680UH
L1305	1-414-402-11	s	INDUCTOR (SMD) 47UH
L1310	1-414-402-11	s	INDUCTOR (SMD) 47UH
L1401	1-410-391-11	s	CHIP INDUCTOR 68UH (3225)
L1402	1-414-402-11	s	INDUCTOR (SMD) 47UH
L1403	1-414-398-11	s	INDUCTOR (SMD) 10UH
L1501	1-414-402-11	s	INDUCTOR (SMD) 47UH
L1502	1-414-402-11	s	INDUCTOR (SMD) 47UH
L1503	1-410-393-11	s	CHIP INDUCTOR 100UH (3225)
L1504	1-410-658-31	s	INDUCTOR,CHIP 220UH (3225)
L1505	1 410 383 31	s	INDUCTOR,CHIP 15UH (3225)
L1506	1-410-387-11	s	CHIP INDUCTOR 33UH (3225)
L1507	1-414-402-11	s	INDUCTOR (SMD) 47UH
L1601	1-410-388-31	s	CHIP INDUCTOR 39UH
L1602	1-414-402-11	s	INDUCTOR (SMD) 47UH
L1603	1-414-398-11	s	INDUCTOR (SMD) 10UH
L1610	1-414-402-11	s	INDUCTOR (SMD) 47UH
L1701	1-414-400-11	s	INDUCTOR, 22UH
L1702	1-414-400-11	s	INDUCTOR, 22UH
L1801	1-414-400-11	s	INDUCTOR, 22UH
L1802	1-414-400-11	s	INDUCTOR, 22UH
L1803	1-410-390-11	s	CHIP INDUCTOR 56UH (3225)
L1804	1-410-390-11	s	CHIP INDUCTOR 56UH (3225)
L1805	1-414-400-11	s	INDUCTOR, 22UH
L1806	1-414-400-11	s	INDUCTOR, 22UH
L1807	1-414-400-11	s	INDUCTOR, 22UH
L1808	1-414-400-11	s	INDUCTOR, 22UH
L1810	1-410-803-11	s	CHIP INDUCTOR 0.047UH (3225)
LV1401	1-406-746-11	s	COIL, VARIABLE
LV1601	1-406-746-11	s	COIL, VARIABLE
Q101	8-729-117-73	s	TRANSISTOR 2SC4178-F14
Q102	8-729-117-73	s	TRANSISTOR 2SC4178-F14
Q103	8-729-013-37	s	TRANSISTOR 2SC4213-AB-TE85L
Q104	8-729-117-73	s	TRANSISTOR 2SC4178-F14
Q105	8-729-013-37	s	TRANSISTOR 2SC4213-AB-TE85L
Q106	8-729-117-73	s	TRANSISTOR 2SC4178-F14
Q107	8-729-117-73	s	TRANSISTOR 2SC4178-F14
Q108	8-729-028-91	s	TRANSISTOR DTA144EUA-T106
Q109	8-729-143-07	s	TRANSISTOR 2SA1610-Y33
Q110	8-729-117-73	s	TRANSISTOR 2SC4178-F14
Q111	8-729-117-73	s	TRANSISTOR 2SC4178-F14
Q112	8-729-117-73	s	TRANSISTOR 2SC4178-F14

(DM-114 BOARD)

Ref. No. or Q'ty	Part No.	SP	Description
Q113	8-729-028-91	s	TRANSISTOR DTA144EUA-T106
Q114	8-729-143-07	s	TRANSISTOR 2SA1610-Y33
Q115	8-729-117-73	s	TRANSISTOR 2SC4178-F14
Q116	8-729-028-91	s	TRANSISTOR DTA144EUA-T106
Q117	8-729-143-07	s	TRANSISTOR 2SA1610-Y33
Q118	8-729-117-73	s	TRANSISTOR 2SC4178-F14
Q119	8-729-117-73	s	TRANSISTOR 2SC4178-F14
Q120	8-729-117-73	s	TRANSISTOR 2SC4178-F14
Q121	8-729-117-73	s	TRANSISTOR 2SC4178-F14
Q122	8-729-117-73	s	TRANSISTOR 2SC4178-F14
Q123	8-729-143-07	s	TRANSISTOR 2SA1610-Y33
Q124	8-729-143-07	s	TRANSISTOR 2SA1610-Y33
Q125	8-729-117-73	s	TRANSISTOR 2SC4178-F14
Q126	8-729-117-73	s	TRANSISTOR 2SC4178-F14
Q127	8-729-117-73	s	TRANSISTOR 2SC4178-F14
Q128	8-729-117-73	s	TRANSISTOR 2SC4178-F14
Q129	8-729-143-07	s	TRANSISTOR 2SA1610-Y33
Q130	8-729-143-07	s	TRANSISTOR 2SA1610-Y33
Q131	8-729-117-73	s	TRANSISTOR 2SC4178-F14
Q132	8-729-117-73	s	TRANSISTOR 2SC4178-F14
Q133	8-729-117-73	s	TRANSISTOR 2SC4178-F14
Q134	8-729-117-73	s	TRANSISTOR 2SC4178-F14
Q135	8-729-117-32	s	TRANSISTOR 2SC4177
Q136	8-729-117-32	s	TRANSISTOR 2SC4177
Q137	8-729-140-63	s	TRANSISTOR 2SA1611-M5M6
Q138	8-729-117-73	s	TRANSISTOR 2SC4178-F14
Q139	8 729 143 07	s	TRANSISTOR 2SA1610 Y33
Q140	8-729-140-63	s	TRANSISTOR 2SA1611-M5M6
Q141	8-729-117-73	s	TRANSISTOR 2SC4178-F14
Q142	8-729-143-07	s	TRANSISTOR 2SA1610-Y33
Q143	8-729-140-63	s	TRANSISTOR 2SA1611-M5M6
Q301	8-729-117-73	s	TRANSISTOR 2SC4178-F14
Q302	8-729-117-73	s	TRANSISTOR 2SC4178-F14
Q303	8-729-117-73	s	TRANSISTOR 2SC4178-F14
Q304	8-729-117-73	s	TRANSISTOR 2SC4178-F14
Q305	8-729-117-73	s	TRANSISTOR 2SC4178-F14
Q306	8-729-117-73	s	TRANSISTOR 2SC4178-F14
Q307	8-729-117-73	s	TRANSISTOR 2SC4178-F14
Q308	8-729-117-73	s	TRANSISTOR 2SC4178-F14
Q309	8-729-117-73	s	TRANSISTOR 2SC4178-F14
Q310	8-729-143-07	s	TRANSISTOR 2SA1610-Y33
Q311	8-729-143-07	s	TRANSISTOR 2SA1610-Y33
Q312	8-729-117-73	s	TRANSISTOR 2SC4178-F14
Q313	8-729-117-73	s	TRANSISTOR 2SC4178-F14
Q314	8-729-143-07	s	TRANSISTOR 2SA1610-Y33
Q315	8-729-143-07	s	TRANSISTOR 2SA1610-Y33
Q316	8-729-117-73	s	TRANSISTOR 2SC4178-F14
Q317	8-729-117-73	s	TRANSISTOR 2SC4178-F14
Q318	8-729-117-73	s	TRANSISTOR 2SC4178-F14
Q319	8-729-117-73	s	TRANSISTOR 2SC4178-F14
Q320	8-729-117-73	s	TRANSISTOR 2SC4178-F14
Q321	8-729-117-32	s	TRANSISTOR 2SC4177
Q322	8-729-140-63	s	TRANSISTOR 2SA1611-M5M6
Q501	8-729-029-14	s	TRANSISTOR DTC144EUA-T106
Q502	8-729-029-14	s	TRANSISTOR DTC144EUA-T106
Q503	8-729-028-91	s	TRANSISTOR DTA144EUA-T106
Q504	8-729-028-91	s	TRANSISTOR DTA144EUA-T106
Q506	8-729-904-41	s	TRANSISTOR FMY3
Q507	8-729-904-41	s	TRANSISTOR FMY3

(DM-114 BOARD)

Ref. No. or Q'ty	Part No.	SP	Description
Q509	8-729-904-41	s	TRANSISTOR FMY3
Q510	8-729-140-63	s	TRANSISTOR 2SA1611-M5M6
Q511	8-729-117-32	s	TRANSISTOR 2SC4177
Q512	8-729-117-73	s	TRANSISTOR 2SC4178-F14
Q513	8-729-028-91	s	TRANSISTOR DTA144EUA-T106
Q514	8-729-117-32	s	TRANSISTOR 2SC4177
Q515	8-729-117-32	s	TRANSISTOR 2SC4177
Q516	8-729-117-32	s	TRANSISTOR 2SC4177
Q517	8-729-117-32	s	TRANSISTOR 2SC4177
Q518	8-729-117-32	s	TRANSISTOR 2SC4177
Q519	8-729-029-14	s	TRANSISTOR DTC144EUA-T106
Q520	8-729-117-32	s	TRANSISTOR 2SC4177
Q522	8-729-117-32	s	TRANSISTOR 2SC4177
Q523	8-729-117-32	s	TRANSISTOR 2SC4177
Q524	8-729-117-32	s	TRANSISTOR 2SC4177
Q525	8-729-117-32	s	TRANSISTOR 2SC4177
Q526	8-729-117-32	s	TRANSISTOR 2SC4177
Q704	8-729-140-63	s	TRANSISTOR 2SA1611-M5M6
Q705	8-729-117-32	s	TRANSISTOR 2SC4177
Q706	8-729-117-32	s	TRANSISTOR 2SC4177
Q707	8-729-140-63	s	TRANSISTOR 2SA1611-M5M6
Q708	8-729-140-63	s	TRANSISTOR 2SA1611-M5M6
Q709	8-729-117-32	s	TRANSISTOR 2SC4177
Q710	8-729-117-32	s	TRANSISTOR 2SC4177
Q711	8-729-117-73	s	TRANSISTOR 2SC4178-F14
Q712	8-729-028-91	s	TRANSISTOR DTA144EUA-T106
Q713	8 729 117 32	s	TRANSISTOR 2SC4177
Q714	8-729-117-32	s	TRANSISTOR 2SC4177
Q715	8-729-117-32	s	TRANSISTOR 2SC4177
Q716	8-729-029-14	s	TRANSISTOR DTC144EUA-T106
Q717	8-729-117-32	s	TRANSISTOR 2SC4177
Q719	8-729-117-31	s	TRANSISTOR 2SC4177-L5
Q720	8-729-117-31	s	TRANSISTOR 2SC4177-L5
Q721	8-729-117-31	s	TRANSISTOR 2SC4177-L5
Q722	8-729-117-31	s	TRANSISTOR 2SC4177-L5
Q723	8-729-117-31	s	TRANSISTOR 2SC4177-L5
Q901	8-729-029-14	s	TRANSISTOR DTC144EUA-T106
Q902	8-729-029-14	s	TRANSISTOR DTC144EUA-T106
Q903	8-729-029-14	s	TRANSISTOR DTC144EUA-T106
Q904	8-729-029-14	s	TRANSISTOR DTC144EUA-T106
Q905	8-729-106-60	s	TRANSISTOR 2SB1115A
Q906	8-729-106-68	s	TRANSISTOR 2SD1615A-GP
Q907	8-729-106-60	s	TRANSISTOR 2SB1115A
Q908	8-729-106-68	s	TRANSISTOR 2SD1615A-GP
Q909	8-729-106-60	s	TRANSISTOR 2SB1115A
Q910	8-729-106-68	s	TRANSISTOR 2SD1615A-GP
Q911	8-729-140-63	s	TRANSISTOR 2SA1611-M5M6
Q912	8-729-117-32	s	TRANSISTOR 2SC4177
Q913	8-729-140-63	s	TRANSISTOR 2SA1611-M5M6
Q914	8-729-117-32	s	TRANSISTOR 2SC4177
Q915	8-729-140-63	s	TRANSISTOR 2SA1611-M5M6
Q916	8-729-117-32	s	TRANSISTOR 2SC4177
Q917	8-729-028-91	s	TRANSISTOR DTA144EUA-T106
Q918	8-729-028-91	s	TRANSISTOR DTA144EUA-T106
Q919	8-729-028-91	s	TRANSISTOR DTA144EUA-T106
Q920	8-729-029-14	s	TRANSISTOR DTC144EUA-T106
Q921	8-729-029-14	s	TRANSISTOR DTC144EUA-T106
Q922	8-729-029-14	s	TRANSISTOR DTC144EUA-T106
Q1101	8-729-117-32	s	TRANSISTOR 2SC4177

(DM-114 BOARD)

Ref. No. or Q'ty	Part No.	SP	Description
Q1102	8-729-140-63	s	TRANSISTOR 2SA1611-M5M6
Q1103	8-729-117-32	s	TRANSISTOR 2SC4177
Q1104	8-729-140-63	s	TRANSISTOR 2SA1611-M5M6
Q1105	8-729-117-73	s	TRANSISTOR 2SC4178-F14
Q1106	8-729-907-26	s	TRANSISTOR IMX1
Q1107	8-729-904-04	s	TRANSISTOR FMS2
Q1108	8-729-029-14	s	TRANSISTOR DTC144EUA-T106
Q1109	8-729-117-73	s	TRANSISTOR 2SC4178-F14
Q1110	8-729-907-26	s	TRANSISTOR IMX1
Q1111	8-729-140-63	s	TRANSISTOR 2SA1611-M5M6
Q1201	8-729-117-32	s	TRANSISTOR 2SC4177
Q1202	8-729-140-63	s	TRANSISTOR 2SA1611-M5M6
Q1203	8-729-117-32	s	TRANSISTOR 2SC4177
Q1204	8-729-140-63	s	TRANSISTOR 2SA1611-M5M6
Q1205	8-729-117-73	s	TRANSISTOR 2SC4178-F14
Q1206	8-729-907-26	s	TRANSISTOR IMX1
Q1207	8-729-904-04	s	TRANSISTOR FMS2
Q1208	8-729-117-73	s	TRANSISTOR 2SC4178-F14
Q1209	8-729-907-26	s	TRANSISTOR IMX1
Q1210	8-729-140-63	s	TRANSISTOR 2SA1611-M5M6
Q1301	8-729-907-26	s	TRANSISTOR IMX1
Q1302	8-729-117-32	s	TRANSISTOR 2SC4177
Q1401	8-729-140-63	s	TRANSISTOR 2SA1611-M5M6
Q1402	8-729-029-14	s	TRANSISTOR DTC144EUA-T106
Q1403	8-729-140-63	s	TRANSISTOR 2SA1611-M5M6
Q1404	8-729-140-63	s	TRANSISTOR 2SA1611-M5M6
Q1405	8 729 140 47	s	TRANSISTOR 2SC3735 L B35
Q1406	8-729-140-63	s	TRANSISTOR 2SA1611-M5M6
Q1407	8-729-117-32	s	TRANSISTOR 2SC4177
Q1408	8-729-117-32	s	TRANSISTOR 2SC4177
Q1409	8-729-140-63	s	TRANSISTOR 2SA1611-M5M6
Q1410	8-729-117-32	s	TRANSISTOR 2SC4177
Q1411	8-729-117-32	s	TRANSISTOR 2SC4177
Q1412	8-729-117-32	s	TRANSISTOR 2SC4177
Q1501	8-729-907-26	s	TRANSISTOR IMX1
Q1502	8-729-117-32	s	TRANSISTOR 2SC4177
Q1601	8-729-140-63	s	TRANSISTOR 2SA1611-M5M6
Q1602	8-729-140-63	s	TRANSISTOR 2SA1611-M5M6
Q1603	8-729-140-63	s	TRANSISTOR 2SA1611-M5M6
Q1604	8-729-140-47	s	TRANSISTOR 2SC3735-L-B35
Q1605	8-729-140-63	s	TRANSISTOR 2SA1611-M5M6
Q1606	8-729-117-32	s	TRANSISTOR 2SC4177
Q1607	8-729-117-32	s	TRANSISTOR 2SC4177
Q1608	8-729-140-63	s	TRANSISTOR 2SA1611-M5M6
Q1609	8-729-117-32	s	TRANSISTOR 2SC4177
Q1610	8-729-117-32	s	TRANSISTOR 2SC4177
Q1611	8-729-117-32	s	TRANSISTOR 2SC4177
Q1801	8-729-117-32	s	TRANSISTOR 2SC4177
Q1802	8-729-029-14	s	TRANSISTOR DTC144EUA-T106
Q1803	8-729-029-14	s	TRANSISTOR DTC144EUA-T106
Q1804	8-729-029-14	s	TRANSISTOR DTC144EUA-T106
Q1805	8-729-029-14	s	TRANSISTOR DTC144EUA-T106
R101	1-218-716-11	s	RESISTOR,CHIP 10K 1/16W(1608)
R102	1-218-716-11	s	RESISTOR,CHIP 10K 1/16W(1608)
R103	1-218-692-11	s	RESISTOR,CHIP 1.0K 1/16W(1608)
R104	1-218-692-11	s	RESISTOR,CHIP 1.0K 1/16W(1608)
R105	1-218-692-11	s	RESISTOR,CHIP 1.0K 1/16W(1608)
R106	1-218-671-11	s	RESISTOR,CHIP 130 1/16W (1608)

(DM-114 BOARD)

Ref. No. or Q'ty	Part No.	SP	Description
R107	1-218-670-11	s	RESISTOR,CHIP 120 1/16W (1608)
R108	1-218-665-11	s	RESISTOR CHIP 75 1/16W (1608)
R109	1-218-668-11	s	RESISTOR,CHIP 100 1/16W (1608)
R110	1-218-716-11	s	RESISTOR,CHIP 10K 1/16W(1608)
R111	1-218-668-11	s	RESISTOR,CHIP 100 1/16W (1608)
R114	1-216-864-11	s	RESISTOR,CHIP 0 1/16W (1608)
R115	1-216-864-11	s	RESISTOR,CHIP 0 1/16W (1608)
R116	1-218-692-11	s	RESISTOR,CHIP 1.0K 1/16W(1608)
R117	1-218-692-11	s	RESISTOR,CHIP 1.0K 1/16W(1608)
R118	1-218-724-11	s	RESISTOR,CHIP 22K 1/16W(1608)
R119	1-218-724-11	s	RESISTOR,CHIP 22K 1/16W(1608)
R120	1-218-692-11	s	RESISTOR,CHIP 1.0K 1/16W(1608)
R121	1-218-676-11	s	RESISTOR,CHIP 220 1/16W(1608)
R122	1-218-708-11	s	RESISTOR,CHIP 4.7K 1/16W(1608)
R123	1-218-692-11	s	RESISTOR,CHIP 1.0K 1/16W(1608)
R125	1-218-652-11	s	RESISTOR,CHIP 22 1/16W (1608)
R126	1-218-692-11	s	RESISTOR,CHIP 1.0K 1/16W(1608)
R127	1-218-692-11	s	RESISTOR,CHIP 1.0K 1/16W(1608)
R128	1-218-698-11	s	RESISTOR,CHIP 1.8K 1/16W(1608)
R129	1-218-692-11	s	RESISTOR,CHIP 1.0K 1/16W(1608)
R130	1-218-694-11	s	RESISTOR CHIP 1.2K1/16W(1608)
R131	1-218-700-11	s	RESISTOR,CHIP 2.2K 1/16W(1608)
R132	1-218-680-11	s	RESISTOR,CHIP 330 1/16W(1608)
R133	1-218-680-11	s	RESISTOR,CHIP 330 1/16W(1608)
R134	1-218-679-91	s	RESISTOR,METAL FILM 300 1/16W
R135	1-218-716-11	s	RESISTOR,CHIP 10K 1/16W(1608)
R136	1 218 708 11	s	RESISTOR,CHIP 4.7K 1/16W(1608)
R137	1-218-708-11	s	RESISTOR,CHIP 4.7K 1/16W(1608)
R138	1-218-716-11	s	RESISTOR,CHIP 10K 1/16W(1608)
R139	1-218-668-11	s	RESISTOR,CHIP 100 1/16W (1608)
R140	1-218-679-91	s	RESISTOR,METAL FILM 300 1/16W
R141	1-218-708-11	s	RESISTOR,CHIP 4.7K 1/16W(1608)
R142	1-218-716-11	s	RESISTOR,CHIP 10K 1/16W(1608)
R143	1-218-668-11	s	RESISTOR,CHIP 100 1/16W (1608)
R144	1-218-716-11	s	RESISTOR,CHIP 10K 1/16W(1608)
R145	1-218-700-11	s	RESISTOR,CHIP 2.2K 1/16W(1608)
R146	1-218-665-11	s	RESISTOR CHIP 75 1/16W (1608)
R147	1-218-708-11	s	RESISTOR,CHIP 4.7K 1/16W(1608)
R148	1-218-668-11	s	RESISTOR,CHIP 100 1/16W (1608)
R149	1-218-668-11	s	RESISTOR,CHIP 100 1/16W (1608)
R150	1-218-684-11	s	RESISTOR CHIP 470 1/16W (1608)
R151	1-218-668-11	s	RESISTOR,CHIP 100 1/16W (1608)
R153	1-218-692-11	s	RESISTOR,CHIP 1.0K 1/16W(1608)
R154	1-218-716-11	s	RESISTOR,CHIP 10K 1/16W(1608)
R155	1-218-716-11	s	RESISTOR,CHIP 10K 1/16W(1608)
R156	1-218-708-11	s	RESISTOR,CHIP 4.7K 1/16W(1608)
R157	1-218-668-11	s	RESISTOR,CHIP 100 1/16W (1608)
R158	1-218-704-11	s	RESISTOR,CHIP 3.3K 1/16W(1608)
R159	1-218-704-11	s	RESISTOR,CHIP 3.3K 1/16W(1608)
R160	1-218-679-91	s	RESISTOR,METAL FILM 300 1/16W
R161	1-218-679-91	s	RESISTOR,METAL FILM 300 1/16W
R162	1-218-716-11	s	RESISTOR,CHIP 10K 1/16W(1608)
R163	1-218-668-11	s	RESISTOR,CHIP 100 1/16W (1608)
R164	1-218-716-11	s	RESISTOR,CHIP 10K 1/16W(1608)
R165	1-218-668-11	s	RESISTOR,CHIP 100 1/16W (1608)
R166	1-218-708-11	s	RESISTOR,CHIP 4.7K 1/16W(1608)
R167	1-218-668-11	s	RESISTOR,CHIP 100 1/16W (1608)
R168	1-218-679-91	s	RESISTOR,METAL FILM 300 1/16W
R169	1-218-668-11	s	RESISTOR,CHIP 100 1/16W (1608)

(DM-114 BOARD)

Ref. No. or Q'ty	Part No.	SP	Description
R170	1-218-679-91	s	RESISTOR,METAL FILM 300 1/16W
R171	1-218-692-11	s	RESISTOR,CHIP 1.0K 1/16W(1608)
R172	1-218-708-11	s	RESISTOR,CHIP 4.7K 1/16W(1608)
R173	1-218-708-11	s	RESISTOR,CHIP 4.7K 1/16W(1608)
R174	1-218-679-91	s	RESISTOR,METAL FILM 300 1/16W
R175	1-218-716-11	s	RESISTOR,CHIP 10K 1/16W(1608)
R176	1-218-668-11	s	RESISTOR,CHIP 100 1/16W (1608)
R177	1-218-668-11	s	RESISTOR,CHIP 100 1/16W (1608)
R178	1-218-676-11	s	RESISTOR,CHIP 220 1/16W(1608)
R179	1-218-685-11	s	RESISTOR,METAL FILM 510 1/16W
R180	1-218-683-11	s	RESISTOR CHIP 430 1/16W (1608)
R181	1-218-684-11	s	RESISTOR CHIP 470 1/16W (1608)
R182	1-218-676-11	s	RESISTOR,CHIP 220 1/16W(1608)
R183	1-218-685-11	s	RESISTOR,METAL FILM 510 1/16W
R184	1-218-683-11	s	RESISTOR CHIP 430 1/16W (1608)
R185	1-218-684-11	s	RESISTOR CHIP 470 1/16W (1608)
R186	1-218-676-11	s	RESISTOR,CHIP 220 1/16W(1608)
R187	1-218-692-11	s	RESISTOR,CHIP 1.0K 1/16W(1608)
R188	1-218-676-11	s	RESISTOR,CHIP 220 1/16W(1608)
R189	1-218-668-11	s	RESISTOR,CHIP 100 1/16W (1608)
R190	1-218-668-11	s	RESISTOR,CHIP 100 1/16W (1608)
R191	1-218-708-11	s	RESISTOR,CHIP 4.7K 1/16W(1608)
R192	1-218-668-11	s	RESISTOR,CHIP 100 1/16W (1608)
R193	1-218-708-11	s	RESISTOR,CHIP 4.7K 1/16W(1608)
R194	1-218-668-11	s	RESISTOR,CHIP 100 1/16W (1608)
R195	1-218-668-11	s	RESISTOR,CHIP 100 1/16W (1608)
R196	1 218 676 11	s	RESISTOR,CHIP 220 1/16W(1608)
R197	1-218-685-11	s	RESISTOR,METAL FILM 510 1/16W
R198	1-218-682-11	s	RESISTOR CHIP 390 1/16W (1608)
R199	1-218-684-11	s	RESISTOR CHIP 470 1/16W (1608)
R200	1-218-676-11	s	RESISTOR,CHIP 220 1/16W(1608)
R201	1-218-685-11	s	RESISTOR,METAL FILM 510 1/16W
R202	1-218-681-11	s	RESISTOR CHIP 360 1/16W (1608)
R203	1-218-684-11	s	RESISTOR CHIP 470 1/16W (1608)
R204	1-218-676-11	s	RESISTOR,CHIP 220 1/16W(1608)
R205	1-218-676-11	s	RESISTOR,CHIP 220 1/16W(1608)
R206	1-218-700-11	s	RESISTOR,CHIP 2.2K 1/16W(1608)
R207	1-218-668-11	s	RESISTOR,CHIP 100 1/16W (1608)
R208	1-218-668-11	s	RESISTOR,CHIP 100 1/16W (1608)
R209	1-218-708-11	s	RESISTOR,CHIP 4.7K 1/16W(1608)
R210	1-218-708-11	s	RESISTOR,CHIP 4.7K 1/16W(1608)
R211	1-218-716-11	s	RESISTOR,CHIP 10K 1/16W(1608)
R212	1-218-716-11	s	RESISTOR,CHIP 10K 1/16W(1608)
R213	1-218-676-11	s	RESISTOR,CHIP 220 1/16W(1608)
R214	1-218-680-11	s	RESISTOR,CHIP 330 1/16W(1608)
R215	1-218-680-11	s	RESISTOR,CHIP 330 1/16W(1608)
R216	1-218-708-11	s	RESISTOR,CHIP 4.7K 1/16W(1608)
R217	1-218-708-11	s	RESISTOR,CHIP 4.7K 1/16W(1608)
R218	1-218-692-11	s	RESISTOR,CHIP 1.0K 1/16W(1608)
R219	1-218-692-11	s	RESISTOR,CHIP 1.0K 1/16W(1608)
R220	1-218-652-11	s	RESISTOR,CHIP 22 1/16W (1608)
R221	1-218-652-11	s	RESISTOR,CHIP 22 1/16W (1608)
R222	1-218-716-11	s	RESISTOR,CHIP 10K 1/16W(1608)
R223	1-218-680-11	s	RESISTOR,CHIP 330 1/16W(1608)
R224	1-218-685-11	s	RESISTOR,METAL FILM 510 1/16W
R225	1-218-685-11	s	RESISTOR,METAL FILM 510 1/16W
R228	1-218-680-11	s	RESISTOR,CHIP 330 1/16W(1608)
R229	1-218-680-11	s	RESISTOR,CHIP 330 1/16W(1608)
R230	1-218-708-11	s	RESISTOR,CHIP 4.7K 1/16W(1608)

(DM-114 BOARD)

Ref. No. or Q'ty	Part No.	SP	Description
R231	1-218-708-11	s	RESISTOR,CHIP 4.7K 1/16W(1608)
R233	1-216-853-11	s	RESISTOR,CHIP 470K 1/16W(1608)
R234	1-218-716-11	s	RESISTOR,CHIP 10K 1/16W(1608)
R235	1-218-686-11	s	RESISTOR CHIP 560 1/16W (1608)
R236	1-218-692-11	s	RESISTOR,CHIP 1.0K 1/16W(1608)
R237	1-218-700-11	s	RESISTOR,CHIP 2.2K 1/16W(1608)
R238	1-218-684-11	s	RESISTOR CHIP 470 1/16W (1608)
R239	1-218-720-11	s	RESISTOR,CHIP 15K 1/16W(1608)
R240	1-218-728-11	s	RESISTOR,METAL 33K 1/16W
R241	1-218-692-11	s	RESISTOR,CHIP 1.0K 1/16W(1608)
R242	1-218-716-11	s	RESISTOR,CHIP 10K 1/16W(1608)
R243	1-218-708-11	s	RESISTOR,CHIP 4.7K 1/16W(1608)
R244	1-218-692-11	s	RESISTOR,CHIP 1.0K 1/16W(1608)
R245	1-218-694-11	s	RESISTOR CHIP 1.2K1/16W(1608)
R246	1-218-708-11	s	RESISTOR,CHIP 4.7K 1/16W(1608)
R247	1-218-716-11	s	RESISTOR,CHIP 10K 1/16W(1608)
R248	1-218-716-11	s	RESISTOR,CHIP 10K 1/16W(1608)
R249	1-218-692-11	s	RESISTOR,CHIP 1.0K 1/16W(1608)
R250	1-218-692-11	s	RESISTOR,CHIP 1.0K 1/16W(1608)
R251	1-218-706-11	s	RESISTOR,CHIP 3.9K 1/16W(1608)
R252	1-218-692-11	s	RESISTOR,CHIP 1.0K 1/16W(1608)
R253	1-218-732-11	s	RESISTOR,CHIP 47K 1/16W(1608)
R254	1-218-716-11	s	RESISTOR,CHIP 10K 1/16W(1608)
R255	1-218-724-11	s	RESISTOR,CHIP 22K 1/16W(1608)
R256	1-218-676-11	s	RESISTOR,CHIP 220 1/16W(1608)
R257	1-218-724-11	s	RESISTOR,CHIP 22K 1/16W(1608)
R258	1 218 716 11	s	RESISTOR,CHIP 10K 1/16W(1608)
R259	1-218-716-11	s	RESISTOR,CHIP 10K 1/16W(1608)
R260	1-218-716-11	s	RESISTOR,CHIP 10K 1/16W(1608)
R261	1-218-692-11	s	RESISTOR,CHIP 1.0K 1/16W(1608)
R262	1-218-724-11	s	RESISTOR,CHIP 22K 1/16W(1608)
R263	1-218-692-11	s	RESISTOR,CHIP 1.0K 1/16W(1608)
R264	1-218-716-11	s	RESISTOR,CHIP 10K 1/16W(1608)
R265	1-218-692-11	s	RESISTOR,CHIP 1.0K 1/16W(1608)
R266	1-218-706-11	s	RESISTOR,CHIP 3.9K 1/16W(1608)
R267	1-218-676-11	s	RESISTOR,CHIP 220 1/16W(1608)
R268	1-218-692-11	s	RESISTOR,CHIP 1.0K 1/16W(1608)
R269	1-218-716-11	s	RESISTOR,CHIP 10K 1/16W(1608)
R270	1-218-668-11	s	RESISTOR,CHIP 100 1/16W (1608)
R271	1-218-668-11	s	RESISTOR,CHIP 100 1/16W (1608)
R272	1-218-692-11	s	RESISTOR,CHIP 1.0K 1/16W(1608)
R273	1-218-740-11	s	RESISTOR,CHIP 100K 1/16W(1608)
R274	1-216-864-11	s	RESISTOR,CHIP 0 1/16W (1608)
R275	1-216-864-11	s	RESISTOR,CHIP 0 1/16W (1608)
R301	1-218-671-11	s	RESISTOR,CHIP 130 1/16W (1608)
R302	1-218-670-11	s	RESISTOR,CHIP 120 1/16W (1608)
R303	1-218-665-11	s	RESISTOR CHIP 75 1/16W (1608)
R304	1-218-664-11	s	RESISTOR,CHIP 68 1/16W (1608)
R305	1-218-700-11	s	RESISTOR,CHIP 2.2K 1/16W(1608)
R306	1-218-732-11	s	RESISTOR,CHIP 47K 1/16W(1608)
R307	1-218-668-11	s	RESISTOR,CHIP 100 1/16W (1608)
R308	1-216-857-11	s	RESISTOR,CHIP 1.0M 1/16W 1608
R309	1-218-716-11	s	RESISTOR,CHIP 10K 1/16W(1608)
R310	1-218-732-11	s	RESISTOR,CHIP 47K 1/16W(1608)
R311	1-218-716-11	s	RESISTOR,CHIP 10K 1/16W(1608)
R312	1-216-857-11	s	RESISTOR,CHIP 1.0M 1/16W 1608
R313	1-218-668-11	s	RESISTOR,CHIP 100 1/16W (1608)
R316	1-218-716-11	s	RESISTOR,CHIP 10K 1/16W(1608)
R317	1-218-700-11	s	RESISTOR,CHIP 2.2K 1/16W(1608)

http://getMANUAL.com

(DM-114 BOARD)

Ref. No. or Q'ty	Part No.	SP	Description
R318	1-218-664-11	s	RESISTOR,CHIP 68 1/16W (1608)
R319	1-218-692-11	s	RESISTOR,CHIP 1.0K 1/16W(1608)
R320	1-218-692-11	s	RESISTOR,CHIP 1.0K 1/16W(1608)
R321	1-218-676-11	s	RESISTOR,CHIP 220 1/16W(1608)
R322	1-218-706-11	s	RESISTOR,CHIP 3.9K 1/16W(1608)
R323	1-218-692-11	s	RESISTOR,CHIP 1.0K 1/16W(1608)
R324	1-218-724-11	s	RESISTOR,CHIP 22K 1/16W(1608)
R325	1-218-724-11	s	RESISTOR,CHIP 22K 1/16W(1608)
R326	1-218-692-11	s	RESISTOR,CHIP 1.0K 1/16W(1608)
R328	1-218-680-11	s	RESISTOR,CHIP 330 1/16W(1608)
R329	1-218-680-11	s	RESISTOR,CHIP 330 1/16W(1608)
R330	1-218-708-11	s	RESISTOR,CHIP 4.7K 1/16W(1608)
R331	1-218-708-11	s	RESISTOR,CHIP 4.7K 1/16W(1608)
R332	1-218-700-11	s	RESISTOR,CHIP 2.2K 1/16W(1608)
R333	1-218-665-11	s	RESISTOR CHIP 75 1/16W (1608)
R334	1-218-668-11	s	RESISTOR,CHIP 100 1/16W (1608)
R335	1-218-684-11	s	RESISTOR CHIP 470 1/16W (1608)
R337	1-218-692-11	s	RESISTOR,CHIP 1.0K 1/16W(1608)
R338	1-218-704-11	s	RESISTOR,CHIP 3.3K 1/16W(1608)
R339	1-218-704-11	s	RESISTOR,CHIP 3.3K 1/16W(1608)
R340	1-218-679-91	s	RESISTOR,METAL FILM 300 1/16W
R341	1-218-679-91	s	RESISTOR,METAL FILM 300 1/16W
R342	1-218-679-91	s	RESISTOR,METAL FILM 300 1/16W
R343	1-218-668-11	s	RESISTOR,CHIP 100 1/16W (1608)
R344	1-218-679-91	s	RESISTOR,METAL FILM 300 1/16W
R345	1-218-668-11	s	RESISTOR,CHIP 100 1/16W (1608)
R346	1-218-708-11	s	RESISTOR,CHIP 4.7K 1/16W(1608)
R347	1-218-684-11	s	RESISTOR CHIP 470 1/16W (1608)
R348	1-218-708-11	s	RESISTOR,CHIP 4.7K 1/16W(1608)
R349	1-218-668-11	s	RESISTOR,CHIP 100 1/16W (1608)
R350	1-218-676-11	s	RESISTOR,CHIP 220 1/16W(1608)
R351	1-218-685-11	s	RESISTOR,METAL FILM 510 1/16W
R352	1-218-683-11	s	RESISTOR CHIP 430 1/16W (1608)
R353	1-218-684-11	s	RESISTOR CHIP 470 1/16W (1608)
R354	1-218-676-11	s	RESISTOR,CHIP 220 1/16W(1608)
R355	1-218-684-11	s	RESISTOR CHIP 470 1/16W (1608)
R356	1-218-682-11	s	RESISTOR CHIP 390 1/16W (1608)
R357	1-218-684-11	s	RESISTOR CHIP 470 1/16W (1608)
R358	1-218-676-11	s	RESISTOR,CHIP 220 1/16W(1608)
R360	1-218-676-11	s	RESISTOR,CHIP 220 1/16W(1608)
R361	1-218-668-11	s	RESISTOR,CHIP 100 1/16W (1608)
R362	1-218-668-11	s	RESISTOR,CHIP 100 1/16W (1608)
R363	1-218-708-11	s	RESISTOR,CHIP 4.7K 1/16W(1608)
R364	1-218-668-11	s	RESISTOR,CHIP 100 1/16W (1608)
R365	1-218-708-11	s	RESISTOR,CHIP 4.7K 1/16W(1608)
R366	1-218-668-11	s	RESISTOR,CHIP 100 1/16W (1608)
R367	1-218-676-11	s	RESISTOR,CHIP 220 1/16W(1608)
R368	1-218-685-11	s	RESISTOR,METAL FILM 510 1/16W
R369	1-218-682-11	s	RESISTOR CHIP 390 1/16W (1608)
R370	1-218-684-11	s	RESISTOR CHIP 470 1/16W (1608)
R371	1-218-676-11	s	RESISTOR,CHIP 220 1/16W(1608)
R372	1-218-685-11	s	RESISTOR,METAL FILM 510 1/16W
R373	1-218-681-11	s	RESISTOR CHIP 360 1/16W (1608)
R374	1-218-684-11	s	RESISTOR CHIP 470 1/16W (1608)
R375	1-218-676-11	s	RESISTOR,CHIP 220 1/16W(1608)
R376	1-218-676-11	s	RESISTOR,CHIP 220 1/16W(1608)
R377	1-218-668-11	s	RESISTOR,CHIP 100 1/16W (1608)
R378	1-218-668-11	s	RESISTOR,CHIP 100 1/16W (1608)
R379	1-218-708-11	s	RESISTOR,CHIP 4.7K 1/16W(1608)

(DM-114 BOARD)

Ref. No. or Q'ty	Part No.	SP	Description
R380	1-218-708-11	s	RESISTOR,CHIP 4.7K 1/16W(1608)
R381	1-218-716-11	s	RESISTOR,CHIP 10K 1/16W(1608)
R382	1-218-676-11	s	RESISTOR,CHIP 220 1/16W(1608)
R383	1-218-680-11	s	RESISTOR,CHIP 330 1/16W(1608)
R384	1-218-680-11	s	RESISTOR,CHIP 330 1/16W(1608)
R385	1-218-708-11	s	RESISTOR,CHIP 4.7K 1/16W(1608)
R386	1-218-708-11	s	RESISTOR,CHIP 4.7K 1/16W(1608)
R387	1-218-692-11	s	RESISTOR,CHIP 1.0K 1/16W(1608)
R388	1-218-652-11	s	RESISTOR,CHIP 22 1/16W (1608)
R389	1-218-652-11	s	RESISTOR,CHIP 22 1/16W (1608)
R390	1-218-692-11	s	RESISTOR,CHIP 1.0K 1/16W(1608)
R391	1-218-680-11	s	RESISTOR,CHIP 330 1/16W(1608)
R392	1-218-685-11	s	RESISTOR,METAL FILM 510 1/16W
R393	1-218-685-11	s	RESISTOR,METAL FILM 510 1/16W
R396	1-218-680-11	s	RESISTOR,CHIP 330 1/16W(1608)
R397	1-218-680-11	s	RESISTOR,CHIP 330 1/16W(1608)
R399	1-216-853-11	s	RESISTOR,CHIP 470K 1/16W(1608)
R400	1-218-708-11	s	RESISTOR,CHIP 4.7K 1/16W(1608)
R401	1-218-708-11	s	RESISTOR,CHIP 4.7K 1/16W(1608)
R402	1-218-700-11	s	RESISTOR,CHIP 2.2K 1/16W(1608)
R403	1-218-684-11	s	RESISTOR CHIP 470 1/16W (1608)
R404	1-218-692-11	s	RESISTOR,CHIP 1.0K 1/16W(1608)
R405	1-218-694-11	s	RESISTOR CHIP 1.2K1/16W(1608)
R406	1-218-720-11	s	RESISTOR,CHIP 15K 1/16W(1608)
R407	1-218-728-11	s	RESISTOR,METAL 33K 1/16W
R408	1-218-716-11	s	RESISTOR,CHIP 10K 1/16W(1608)
R409	1-218-708-11	s	RESISTOR,CHIP 4.7K 1/16W(1608)
R410	1-218-692-11	s	RESISTOR,CHIP 1.0K 1/16W(1608)
R411	1-218-708-11	s	RESISTOR,CHIP 4.7K 1/16W(1608)
R412	1-218-716-11	s	RESISTOR,CHIP 10K 1/16W(1608)
R413	1-218-692-11	s	RESISTOR,CHIP 1.0K 1/16W(1608)
R414	1-218-732-11	s	RESISTOR,CHIP 47K 1/16W(1608)
R415	1-218-716-11	s	RESISTOR,CHIP 10K 1/16W(1608)
R416	1-218-724-11	s	RESISTOR,CHIP 22K 1/16W(1608)
R417	1-218-724-11	s	RESISTOR,CHIP 22K 1/16W(1608)
R418	1-218-716-11	s	RESISTOR,CHIP 10K 1/16W(1608)
R419	1-218-724-11	s	RESISTOR,CHIP 22K 1/16W(1608)
R420	1-218-716-11	s	RESISTOR,CHIP 10K 1/16W(1608)
R421	1-218-692-11	s	RESISTOR,CHIP 1.0K 1/16W(1608)
R422	1-218-740-11	s	RESISTOR,CHIP 100K 1/16W(1608)
R423	1-216-864-11	s	RESISTOR,CHIP 0 1/16W (1608)
R424	1-218-668-11	s	RESISTOR,CHIP 100 1/16W (1608)
R425	1-218-692-11	s	RESISTOR,CHIP 1.0K 1/16W(1608)
R501	1-218-740-11	s	RESISTOR,CHIP 100K 1/16W(1608)
R502	1-218-716-11	s	RESISTOR,CHIP 10K 1/16W(1608)
R503	1-218-732-11	s	RESISTOR,CHIP 47K 1/16W(1608)
R504	1-218-716-11	s	RESISTOR,CHIP 10K 1/16W(1608)
R505	1-218-716-11	s	RESISTOR,CHIP 10K 1/16W(1608)
R506	1-218-708-11	s	RESISTOR,CHIP 4.7K 1/16W(1608)
R507	1-218-716-11	s	RESISTOR,CHIP 10K 1/16W(1608)
R508	1-218-716-11	s	RESISTOR,CHIP 10K 1/16W(1608)
R510	1-218-716-11	s	RESISTOR,CHIP 10K 1/16W(1608)
R511	1-218-716-11	s	RESISTOR,CHIP 10K 1/16W(1608)
R512	1-218-716-11	s	RESISTOR,CHIP 10K 1/16W(1608)
R513	1-218-716-11	s	RESISTOR,CHIP 10K 1/16W(1608)
R514	1-218-716-11	s	RESISTOR,CHIP 10K 1/16W(1608)
R515	1-218-716-11	s	RESISTOR,CHIP 10K 1/16W(1608)
R517	1-218-691-11	s	RESISTOR CHIP 910 1/16W (1608)
R518	1-218-692-11	s	RESISTOR,CHIP 1.0K 1/16W(1608)

(DM-114 BOARD)

Ref. No. or Q'ty	Part No.	SP	Description
R519	1-218-692-11	s	RESISTOR,CHIP 1.0K 1/16W(1608)
R521	1-216-864-11	s	RESISTOR,CHIP 0 1/16W (1608)
R522	1-218-732-11	s	RESISTOR,CHIP 47K 1/16W(1608)
R523	1-218-726-11	s	RESISTOR CHIP 27K 1/16W (1608)
R524	1-218-732-11	s	RESISTOR,CHIP 47K 1/16W(1608)
R525	1-216-853-11	s	RESISTOR,CHIP 470K 1/16W(1608)
R526	1-216-853-11	s	RESISTOR,CHIP 470K 1/16W(1608)
R527	1-218-708-11	s	RESISTOR,CHIP 4.7K 1/16W(1608)
R528	1-218-726-11	s	RESISTOR CHIP 27K 1/16W (1608)
R529	1-218-668-11	s	RESISTOR,CHIP 100 1/16W (1608)
R530	1-218-711-11	s	RESISTOR,METAL 6.2K 1/16W
R531	1-218-676-11	s	RESISTOR,CHIP 220 1/16W(1608)
R532	1-218-676-11	s	RESISTOR,CHIP 220 1/16W(1608)
R533	1-218-668-11	s	RESISTOR,CHIP 100 1/16W (1608)
R534	1-218-670-11	s	RESISTOR,CHIP 120 1/16W (1608)
R535	1-218-706-11	s	RESISTOR,CHIP 3.9K 1/16W(1608)
R537	1-218-721-11	s	RESISTOR,CHIP 16K 1/16W(1608)
R538	1-218-694-11	s	RESISTOR CHIP 1.2K1/16W(1608)
R539	1-218-692-11	s	RESISTOR,CHIP 1.0K 1/16W(1608)
R540	1-218-652-11	s	RESISTOR,CHIP 22 1/16W (1608)
R541	1-218-692-11	s	RESISTOR,CHIP 1.0K 1/16W(1608)
R542	1-218-716-11	s	RESISTOR,CHIP 10K 1/16W(1608)
R543	1-218-708-11	s	RESISTOR,CHIP 4.7K 1/16W(1608)
R548	1-218-724-11	s	RESISTOR,CHIP 22K 1/16W(1608)
R549	1-218-723-11	s	RESISTOR,CHIP 20K 1/16W(1608)
R552	1-218-692-11	s	RESISTOR,CHIP 1.0K 1/16W(1608)
R553	1 218 692 11	s	RESISTOR,CHIP 1.0K 1/16W(1608)
R555	1-218-684-11	s	RESISTOR CHIP 470 1/16W (1608)
R556	1-218-684-11	s	RESISTOR CHIP 470 1/16W (1608)
R557	1-218-721-11	s	RESISTOR,CHIP 16K 1/16W(1608)
R559	1-218-680-11	s	RESISTOR,CHIP 330 1/16W(1608)
R563	1-218-692-11	s	RESISTOR,CHIP 1.0K 1/16W(1608)
R565	1-218-699-11	s	RESISTOR CHIP 2.0K 1/16W(1608)
R566	1-218-699-11	s	RESISTOR CHIP 2.0K 1/16W(1608)
R568	1-218-692-11	s	RESISTOR,CHIP 1.0K 1/16W(1608)
R569	1-218-692-11	s	RESISTOR,CHIP 1.0K 1/16W(1608)
R571	1-218-740-11	s	RESISTOR,CHIP 100K 1/16W(1608)
R573	1-218-692-11	s	RESISTOR,CHIP 1.0K 1/16W(1608)
R574	1-218-684-11	s	RESISTOR CHIP 470 1/16W (1608)
R575	1-218-708-11	s	RESISTOR,CHIP 4.7K 1/16W(1608)
R576	1-218-692-11	s	RESISTOR,CHIP 1.0K 1/16W(1608)
R577	1-218-722-11	s	RESISTOR,CHIP 18K 1/16W 1608
R578	1-218-707-11	s	RESISTOR,CHIP 4.3K 1/16W(1608)
R579	1-218-708-11	s	RESISTOR,CHIP 4.7K 1/16W(1608)
R580	1-218-716-11	s	RESISTOR,CHIP 10K 1/16W(1608)
R581	1-218-732-11	s	RESISTOR,CHIP 47K 1/16W(1608)
R582	1-218-716-11	s	RESISTOR,CHIP 10K 1/16W(1608)
R583	1-218-661-11	s	RESISTOR,CHIP 51 1/16W (1608)
R585	1-216-864-11	s	RESISTOR,CHIP 0 1/16W (1608)
R586	1-218-684-11	s	RESISTOR CHIP 470 1/16W (1608)
R587	1-218-692-11	s	RESISTOR,CHIP 1.0K 1/16W(1608)
R588	1-218-652-11	s	RESISTOR,CHIP 22 1/16W (1608)
R589	1-218-652-11	s	RESISTOR,CHIP 22 1/16W (1608)
R590	1-218-684-11	s	RESISTOR CHIP 470 1/16W (1608)
R591	1-218-692-11	s	RESISTOR,CHIP 1.0K 1/16W(1608)
R592	1-218-684-11	s	RESISTOR CHIP 470 1/16W (1608)
R593	1-218-700-11	s	RESISTOR,CHIP 2.2K 1/16W(1608)
R594	1-218-684-11	s	RESISTOR CHIP 470 1/16W (1608)
R595	1-216-864-11	s	RESISTOR,CHIP 0 1/16W (1608)

(DM-114 BOARD)

Ref. No. or Q'ty	Part No.	SP	Description
R600	1-218-700-11	s	RESISTOR,CHIP 2.2K 1/16W(1608)
R603	1-218-692-11	s	RESISTOR,CHIP 1.0K 1/16W(1608)
R604	1-218-692-11	s	RESISTOR,CHIP 1.0K 1/16W(1608)
R605	1-218-716-11	s	RESISTOR,CHIP 10K 1/16W(1608)
R606	1-218-716-11	s	RESISTOR,CHIP 10K 1/16W(1608)
R607	1-218-716-11	s	RESISTOR,CHIP 10K 1/16W(1608)
R608	1-218-716-11	s	RESISTOR,CHIP 10K 1/16W(1608)
R609	1-218-719-11	s	RESISTOR,METAL 13K 1/16
R610	1-218-698-11	s	RESISTOR,CHIP 1.8K 1/16W(1608)
R611	1-218-692-11	s	RESISTOR,CHIP 1.0K 1/16W(1608)
R612	1-218-716-11	s	RESISTOR,CHIP 10K 1/16W(1608)
R613	1-218-684-11	s	RESISTOR CHIP 470 1/16W (1608)
R614	1-218-668-11	s	RESISTOR,CHIP 100 1/16W (1608)
R615	1-218-668-11	s	RESISTOR,CHIP 100 1/16W (1608)
R616	1-218-708-11	s	RESISTOR,CHIP 4.7K 1/16W(1608)
R617	1-218-668-11	s	RESISTOR,CHIP 100 1/16W (1608)
R618	1-218-692-11	s	RESISTOR,CHIP 1.0K 1/16W(1608)
R619	1-218-692-11	s	RESISTOR,CHIP 1.0K 1/16W(1608)
R620	1-218-692-11	s	RESISTOR,CHIP 1.0K 1/16W(1608)
R621	1-218-692-11	s	RESISTOR,CHIP 1.0K 1/16W(1608)
R622	1-218-684-11	s	RESISTOR CHIP 470 1/16W (1608)
R623	1-218-684-11	s	RESISTOR CHIP 470 1/16W (1608)
R624	1-218-692-11	s	RESISTOR,CHIP 1.0K 1/16W(1608)
R625	1-218-690-11	s	RESISTOR CHIP 820 1/16W (1608)
R626	1-218-690-11	s	RESISTOR CHIP 820 1/16W (1608)
R627	1-218-690-11	s	RESISTOR CHIP 820 1/16W (1608)
R628	1 218 692 11	s	RESISTOR,CHIP 1.0K 1/16W(1608)
R629	1-218-692-11	s	RESISTOR,CHIP 1.0K 1/16W(1608)
R630	1-218-692-11	s	RESISTOR,CHIP 1.0K 1/16W(1608)
R631	1-218-692-11	s	RESISTOR,CHIP 1.0K 1/16W(1608)
R634	1-218-684-11	s	RESISTOR CHIP 470 1/16W (1608)
R635	1-218-684-11	s	RESISTOR CHIP 470 1/16W (1608)
R636	1-218-687-11	s	RESISTOR CHIP 620 1/16W (1608)
R637	1-218-668-11	s	RESISTOR,CHIP 100 1/16W (1608)
R638	1-218-692-11	s	RESISTOR,CHIP 1.0K 1/16W(1608)
R639	1-218-684-11	s	RESISTOR CHIP 470 1/16W (1608)
R640	1-218-692-11	s	RESISTOR,CHIP 1.0K 1/16W(1608)
R641	1-218-668-11	s	RESISTOR,CHIP 100 1/16W (1608)
R642	1-218-692-11	s	RESISTOR,CHIP 1.0K 1/16W(1608)
R643	1-218-682-11	s	RESISTOR CHIP 390 1/16W (1608)
R644	1-218-692-11	s	RESISTOR,CHIP 1.0K 1/16W(1608)
R645	1-218-661-11	s	RESISTOR,CHIP 51 1/16W (1608)
R646	1-216-864-11	s	RESISTOR,CHIP 0 1/16W (1608)
R647	1-218-716-11	s	RESISTOR,CHIP 10K 1/16W(1608)
R648	1-218-692-11	s	RESISTOR,CHIP 1.0K 1/16W(1608)
R649	1-218-747-11	s	RESISTOR,METAL 200K 1/16(1608)
R701	1-218-732-11	s	RESISTOR,CHIP 47K 1/16W(1608)
R702	1-218-716-11	s	RESISTOR,CHIP 10K 1/16W(1608)
R703	1-218-732-11	s	RESISTOR,CHIP 47K 1/16W(1608)
R704	1-218-726-11	s	RESISTOR CHIP 27K 1/16W (1608)
R705	1-216-853-11	s	RESISTOR,CHIP 470K 1/16W(1608)
R706	1-218-732-11	s	RESISTOR,CHIP 47K 1/16W(1608)
R707	1-218-711-11	s	RESISTOR,METAL 6.2K 1/16W
R708	1-218-726-11	s	RESISTOR CHIP 27K 1/16W (1608)
R709	1-218-711-11	s	RESISTOR,METAL 6.2K 1/16W
R710	1-218-676-11	s	RESISTOR,CHIP 220 1/16W(1608)
R711	1-218-676-11	s	RESISTOR,CHIP 220 1/16W(1608)
R712	1-218-681-11	s	RESISTOR CHIP 360 1/16W (1608)
R713	1-218-706-11	s	RESISTOR,CHIP 3.9K 1/16W(1608)

(DM-114 BOARD)

Ref. No. or Q'ty	Part No.	SP	Description
R715	1-218-718-11	s	RESISTOR CHIP 12K 1/16W (1608)
R716	1-218-693-11	s	RESISTOR,CHIP 1.1K 1/16W(1608)
R717	1-218-716-11	s	RESISTOR,CHIP 10K 1/16W(1608)
R718	1-218-652-11	s	RESISTOR,CHIP 22 1/16W (1608)
R719	1-218-692-11	s	RESISTOR,CHIP 1.0K 1/16W(1608)
R725	1-218-692-11	s	RESISTOR,CHIP 1.0K 1/16W(1608)
R726	1-218-684-11	s	RESISTOR CHIP 470 1/16W (1608)
R727	1-218-680-11	s	RESISTOR,CHIP 330 1/16W(1608)
R729	1-218-696-11	s	RESISTOR CHIP 1.5K 1/16W(1608)
R730	1-218-701-11	s	RESISTOR,CHIP 2.4K 1/16W(1608)
R731	1-218-692-11	s	RESISTOR,CHIP 1.0K 1/16W(1608)
R732	1-218-692-11	s	RESISTOR,CHIP 1.0K 1/16W(1608)
R734	1-218-668-11	s	RESISTOR,CHIP 100 1/16W (1608)
R735	1-218-740-11	s	RESISTOR,CHIP 100K 1/16W(1608)
R737	1-218-692-11	s	RESISTOR,CHIP 1.0K 1/16W(1608)
R738	1-218-698-11	s	RESISTOR,CHIP 1.8K 1/16W(1608)
R739	1-218-698-11	s	RESISTOR,CHIP 1.8K 1/16W(1608)
R740	1-218-672-11	s	RESISTOR,CHIP 150 1/16W(1608)
R741	1-218-684-11	s	RESISTOR CHIP 470 1/16W (1608)
R742	1-218-672-11	s	RESISTOR,CHIP 150 1/16W(1608)
R743	1-218-704-11	s	RESISTOR,CHIP 3.3K 1/16W(1608)
R744	1-218-716-11	s	RESISTOR,CHIP 10K 1/16W(1608)
R745	1-218-716-11	s	RESISTOR,CHIP 10K 1/16W(1608)
R746	1-218-692-11	s	RESISTOR,CHIP 1.0K 1/16W(1608)
R747	1-218-708-11	s	RESISTOR,CHIP 4.7K 1/16W(1608)
R748	1-218-692-11	s	RESISTOR,CHIP 1.0K 1/16W(1608)
R749	1-218-708-11	s	RESISTOR,CHIP 4.7K 1/16W(1608)
R750	1-218-716-11	s	RESISTOR,CHIP 10K 1/16W(1608)
R751	1-218-732-11	s	RESISTOR,CHIP 47K 1/16W(1608)
R752	1-218-716-11	s	RESISTOR,CHIP 10K 1/16W(1608)
R753	1-218-716-11	s	RESISTOR,CHIP 10K 1/16W(1608)
R754	1-218-716-11	s	RESISTOR,CHIP 10K 1/16W(1608)
R755	1-218-661-11	s	RESISTOR,CHIP 51 1/16W (1608)
R756	1-218-722-11	s	RESISTOR,CHIP 18K 1/16W 1608
R757	1-218-707-11	s	RESISTOR,CHIP 4.3K 1/16W(1608)
R758	1-218-716-11	s	RESISTOR,CHIP 10K 1/16W(1608)
R759	1-218-716-11	s	RESISTOR,CHIP 10K 1/16W(1608)
R761	1-218-652-11	s	RESISTOR,CHIP 22 1/16W (1608)
R762	1-218-719-11	s	RESISTOR,METAL 13K 1/16
R763	1-218-698-11	s	RESISTOR,CHIP 1.8K 1/16W(1608)
R764	1-218-692-11	s	RESISTOR,CHIP 1.0K 1/16W(1608)
R765	1-218-716-11	s	RESISTOR,CHIP 10K 1/16W(1608)
R766	1-218-668-11	s	RESISTOR,CHIP 100 1/16W (1608)
R767	1-218-668-11	s	RESISTOR,CHIP 100 1/16W (1608)
R768	1-218-692-11	s	RESISTOR,CHIP 1.0K 1/16W(1608)
R769	1-218-680-11	s	RESISTOR,CHIP 330 1/16W(1608)
R770	1-218-680-11	s	RESISTOR,CHIP 330 1/16W(1608)
R771	1-218-700-11	s	RESISTOR,CHIP 2.2K 1/16W(1608)
R773	1-218-692-11	s	RESISTOR,CHIP 1.0K 1/16W(1608)
R774	1-218-668-11	s	RESISTOR,CHIP 100 1/16W (1608)
R775	1-218-668-11	s	RESISTOR,CHIP 100 1/16W (1608)
R776	1-218-692-11	s	RESISTOR,CHIP 1.0K 1/16W(1608)
R777	1-218-692-11	s	RESISTOR,CHIP 1.0K 1/16W(1608)
R778	1-218-692-11	s	RESISTOR,CHIP 1.0K 1/16W(1608)
R779	1-218-692-11	s	RESISTOR,CHIP 1.0K 1/16W(1608)
R780	1-218-690-11	s	RESISTOR CHIP 820 1/16W (1608)
R781	1-218-690-11	s	RESISTOR CHIP 820 1/16W (1608)
R782	1-218-692-11	s	RESISTOR,CHIP 1.0K 1/16W(1608)
R783	1-218-684-11	s	RESISTOR CHIP 470 1/16W (1608)

(DM-114 BOARD)

Ref. No. or Q'ty	Part No.	SP	Description
R784	1-218-684-11	s	RESISTOR CHIP 470 1/16W (1608)
R785	1-218-690-11	s	RESISTOR CHIP 820 1/16W (1608)
R787	1-218-692-11	s	RESISTOR,CHIP 1.0K 1/16W(1608)
R788	1-218-692-11	s	RESISTOR,CHIP 1.0K 1/16W(1608)
R789	1-218-692-11	s	RESISTOR,CHIP 1.0K 1/16W(1608)
R790	1-218-692-11	s	RESISTOR,CHIP 1.0K 1/16W(1608)
R791	1-218-684-11	s	RESISTOR CHIP 470 1/16W (1608)
R792	1-218-708-11	s	RESISTOR,CHIP 4.7K 1/16W(1608)
R793	1-218-684-11	s	RESISTOR CHIP 470 1/16W (1608)
R794	1-218-687-11	s	RESISTOR CHIP 620 1/16W (1608)
R795	1-218-692-11	s	RESISTOR,CHIP 1.0K 1/16W(1608)
R796	1-218-668-11	s	RESISTOR,CHIP 100 1/16W (1608)
R797	1-218-684-11	s	RESISTOR CHIP 470 1/16W (1608)
R798	1-218-692-11	s	RESISTOR,CHIP 1.0K 1/16W(1608)
R799	1-218-668-11	s	RESISTOR,CHIP 100 1/16W (1608)
R800	1-218-692-11	s	RESISTOR,CHIP 1.0K 1/16W(1608)
R801	1-218-682-11	s	RESISTOR CHIP 390 1/16W (1608)
R802	1-218-692-11	s	RESISTOR,CHIP 1.0K 1/16W(1608)
R803	1-218-661-11	s	RESISTOR,CHIP 51 1/16W (1608)
R804	1-216-864-11	s	RESISTOR,CHIP 0 1/16W (1608)
R901	1-218-692-11	s	RESISTOR,CHIP 1.0K 1/16W(1608)
R902	1-218-668-11	s	RESISTOR,CHIP 100 1/16W (1608)
R903	1-218-716-11	s	RESISTOR,CHIP 10K 1/16W(1608)
R904	1-218-692-11	s	RESISTOR,CHIP 1.0K 1/16W(1608)
R905	1-218-716-11	s	RESISTOR,CHIP 10K 1/16W(1608)
R906	1-218-692-11	s	RESISTOR,CHIP 1.0K 1/16W(1608)
R907	1-218-668-11	s	RESISTOR,CHIP 100 1/16W (1608)
R908	1-218-716-11	s	RESISTOR,CHIP 10K 1/16W(1608)
R909	1-218-716-11	s	RESISTOR,CHIP 10K 1/16W(1608)
R910	1-216-864-11	s	RESISTOR,CHIP 0 1/16W (1608)
R911	1-216-864-11	s	RESISTOR,CHIP 0 1/16W (1608)
R912	1-218-668-11	s	RESISTOR,CHIP 100 1/16W (1608)
R913	1-218-668-11	s	RESISTOR,CHIP 100 1/16W (1608)
R915	1-218-668-11	s	RESISTOR,CHIP 100 1/16W (1608)
R916	1-218-740-11	s	RESISTOR,CHIP 100K 1/16W(1608)
R917	1-218-740-11	s	RESISTOR,CHIP 100K 1/16W(1608)
R918	1-218-740-11	s	RESISTOR,CHIP 100K 1/16W(1608)
R919	1-218-740-11	s	RESISTOR,CHIP 100K 1/16W(1608)
R920	1-218-740-11	s	RESISTOR,CHIP 100K 1/16W(1608)
R921	1-218-740-11	s	RESISTOR,CHIP 100K 1/16W(1608)
R922	1-218-716-11	s	RESISTOR,CHIP 10K 1/16W(1608)
R923	1-218-716-11	s	RESISTOR,CHIP 10K 1/16W(1608)
R924	1-218-716-11	s	RESISTOR,CHIP 10K 1/16W(1608)
R925	1-218-716-11	s	RESISTOR,CHIP 10K 1/16W(1608)
R926	1-218-716-11	s	RESISTOR,CHIP 10K 1/16W(1608)
R928	1-218-740-11	s	RESISTOR,CHIP 100K 1/16W(1608)
R929	1-218-740-11	s	RESISTOR,CHIP 100K 1/16W(1608)
R930	1-218-740-11	s	RESISTOR,CHIP 100K 1/16W(1608)
R931	1-218-740-11	s	RESISTOR,CHIP 100K 1/16W(1608)
R933	1-218-740-11	s	RESISTOR,CHIP 100K 1/16W(1608)
R934	1-218-740-11	s	RESISTOR,CHIP 100K 1/16W(1608)
R935	1-218-716-11	s	RESISTOR,CHIP 10K 1/16W(1608)
R936	1-218-740-11	s	RESISTOR,CHIP 100K 1/16W(1608)
R937	1-218-692-11	s	RESISTOR,CHIP 1.0K 1/16W(1608)
R938	1-218-692-11	s	RESISTOR,CHIP 1.0K 1/16W(1608)
R939	1-218-700-11	s	RESISTOR,CHIP 2.2K 1/16W(1608)
R940	1-218-716-11	s	RESISTOR,CHIP 10K 1/16W(1608)
R941	1-218-692-11	s	RESISTOR,CHIP 1.0K 1/16W(1608)
R942	1-218-716-11	s	RESISTOR,CHIP 10K 1/16W(1608)

(DM-114 BOARD)

Ref. No. or Q'ty	Part No.	SP	Description
R943	1-218-740-11	s	RESISTOR,CHIP 100K 1/16W(1608)
R944	1-218-692-11	s	RESISTOR,CHIP 1.0K 1/16W(1608)
R945	1-218-732-11	s	RESISTOR,CHIP 47K 1/16W(1608)
R946	1-218-668-11	s	RESISTOR,CHIP 100 1/16W (1608)
R947	1-218-668-11	s	RESISTOR,CHIP 100 1/16W (1608)
R948	1-218-668-11	s	RESISTOR,CHIP 100 1/16W (1608)
R949	1-218-668-11	s	RESISTOR,CHIP 100 1/16W (1608)
R950	1-218-668-11	s	RESISTOR,CHIP 100 1/16W (1608)
R951	1-218-668-11	s	RESISTOR,CHIP 100 1/16W (1608)
R952	1-218-660-91	s	RESISTOR CHIP 47 1/16W (1608)
R953	1-218-660-91	s	RESISTOR CHIP 47 1/16W (1608)
R954	1-218-660-91	s	RESISTOR CHIP 47 1/16W (1608)
R955	1-218-660-91	s	RESISTOR CHIP 47 1/16W (1608)
R956	1-218-660-91	s	RESISTOR CHIP 47 1/16W (1608)
R957	1-218-660-91	s	RESISTOR CHIP 47 1/16W (1608)
R958	1-218-668-11	s	RESISTOR,CHIP 100 1/16W (1608)
R959	1-218-668-11	s	RESISTOR,CHIP 100 1/16W (1608)
R960	1-218-668-11	s	RESISTOR,CHIP 100 1/16W (1608)
R961	1-218-668-11	s	RESISTOR,CHIP 100 1/16W (1608)
R962	1-218-668-11	s	RESISTOR,CHIP 100 1/16W (1608)
R963	1-218-668-11	s	RESISTOR,CHIP 100 1/16W (1608)
R964	1-218-708-11	s	RESISTOR,CHIP 4.7K 1/16W(1608)
R965	1-218-708-11	s	RESISTOR,CHIP 4.7K 1/16W(1608)
R966	1-218-708-11	s	RESISTOR,CHIP 4.7K 1/16W(1608)
R967	1-218-708-11	s	RESISTOR,CHIP 4.7K 1/16W(1608)
R968	1-218-708-11	s	RESISTOR,CHIP 4.7K 1/16W(1608)
R969	1 218 708 11	s	RESISTOR,CHIP 4.7K 1/16W(1608)
R970	1-218-700-11	s	RESISTOR,CHIP 2.2K 1/16W(1608)
R971	1-218-700-11	s	RESISTOR,CHIP 2.2K 1/16W(1608)
R972	1-218-700-11	s	RESISTOR,CHIP 2.2K 1/16W(1608)
R973	1-218-716-11	s	RESISTOR,CHIP 10K 1/16W(1608)
R974	1-218-716-11	s	RESISTOR,CHIP 10K 1/16W(1608)
R975	1-218-716-11	s	RESISTOR,CHIP 10K 1/16W(1608)
R976	1-218-716-11	s	RESISTOR,CHIP 10K 1/16W(1608)
R977	1-218-716-11	s	RESISTOR,CHIP 10K 1/16W(1608)
R978	1-218-716-11	s	RESISTOR,CHIP 10K 1/16W(1608)
R979	1-218-716-11	s	RESISTOR,CHIP 10K 1/16W(1608)
R980	1-218-716-11	s	RESISTOR,CHIP 10K 1/16W(1608)
R981	1-218-716-11	s	RESISTOR,CHIP 10K 1/16W(1608)
R982	1-218-716-11	s	RESISTOR,CHIP 10K 1/16W(1608)
R983	1-218-716-11	s	RESISTOR,CHIP 10K 1/16W(1608)
R984	1-218-716-11	s	RESISTOR,CHIP 10K 1/16W(1608)
R985	1-216-864-11	s	RESISTOR,CHIP 0 1/16W (1608)
R986	1-216-864-11	s	RESISTOR,CHIP 0 1/16W (1608)
R987	1-216-864-11	s	RESISTOR,CHIP 0 1/16W (1608)
R988	1-218-748-11	s	RESISTOR,CHIP 220K 1/16W(1608)
R990	1-218-748-11	s	RESISTOR,CHIP 220K 1/16W(1608)
R991	1-218-748-11	s	RESISTOR,CHIP 220K 1/16W(1608)
R993	1-218-740-11	s	RESISTOR,CHIP 100K 1/16W(1608)
R994	1-218-740-11	s	RESISTOR,CHIP 100K 1/16W(1608)
R995	1-218-740-11	s	RESISTOR,CHIP 100K 1/16W(1608)
R996	1-218-740-11	s	RESISTOR,CHIP 100K 1/16W(1608)
R997	1-218-740-11	s	RESISTOR,CHIP 100K 1/16W(1608)
R998	1-218-740-11	s	RESISTOR,CHIP 100K 1/16W(1608)
R999	1-218-740-11	s	RESISTOR,CHIP 100K 1/16W(1608)
R1000	1-218-740-11	s	RESISTOR,CHIP 100K 1/16W(1608)
R1001	1-218-740-11	s	RESISTOR,CHIP 100K 1/16W(1608)
R1101	1-218-679-91	s	RESISTOR,METAL FILM 300 1/16W
R1102	1-218-660-91	s	RESISTOR CHIP 47 1/16W (1608)

(DM-114 BOARD)

Ref. No. or Q'ty	Part No.	SP	Description
R1103	1-218-660-91	s	RESISTOR CHIP 47 1/16W (1608)
R1104	1-218-736-11	s	RESISTOR,CHIP 68K 1/16W(1608)
R1105	1-218-692-11	s	RESISTOR,CHIP 1.0K 1/16W(1608)
R1106	1-218-660-91	s	RESISTOR CHIP 47 1/16W (1608)
R1107	1-218-660-91	s	RESISTOR CHIP 47 1/16W (1608)
R1108	1-218-668-11	s	RESISTOR,CHIP 100 1/16W (1608)
R1109	1-218-692-11	s	RESISTOR,CHIP 1.0K 1/16W(1608)
R1110	1-218-692-11	s	RESISTOR,CHIP 1.0K 1/16W(1608)
R1111	1-218-660-91	s	RESISTOR CHIP 47 1/16W (1608)
R1112	1-218-692-11	s	RESISTOR,CHIP 1.0K 1/16W(1608)
R1113	1-218-688-11	s	RESISTOR,CHIP 680 1/16W(1608)
R1114	1-218-680-11	s	RESISTOR,CHIP 330 1/16W(1608)
R1115	1-218-680-11	s	RESISTOR,CHIP 330 1/16W(1608)
R1116	1-218-660-91	s	RESISTOR CHIP 47 1/16W (1608)
R1117	1-218-692-11	s	RESISTOR,CHIP 1.0K 1/16W(1608)
R1118	1-218-660-91	s	RESISTOR CHIP 47 1/16W (1608)
R1119	1-218-692-11	s	RESISTOR,CHIP 1.0K 1/16W(1608)
R1120	1-218-700-11	s	RESISTOR,CHIP 2.2K 1/16W(1608)
R1121	1-218-682-11	s	RESISTOR CHIP 390 1/16W (1608)
R1122	1-218-740-11	s	RESISTOR,CHIP 100K 1/16W(1608)
R1123	1-216-857-11	s	RESISTOR,CHIP 1.0M 1/16W 1608
R1124	1-218-724-11	s	RESISTOR,CHIP 22K 1/16W(1608)
R1125	1-218-700-11	s	RESISTOR,CHIP 2.2K 1/16W(1608)
R1126	1-218-704-11	s	RESISTOR,CHIP 3.3K 1/16W(1608)
R1127	1-218-722-11	s	RESISTOR,CHIP 18K 1/16W 1608
R1128	1-218-725-11	s	RESISTOR,CHIP 24K 1/16W(1608)
R1129	1 218 708 11	s	RESISTOR,CHIP 4.7K 1/16W(1608)
R1130	1-218-668-11	s	RESISTOR,CHIP 100 1/16W (1608)
R1131	1-218-668-11	s	RESISTOR,CHIP 100 1/16W (1608)
R1132	1-218-698-11	s	RESISTOR,CHIP 1.8K 1/16W(1608)
R1133	1-218-668-11	s	RESISTOR,CHIP 100 1/16W (1608)
R1134	1-218-698-11	s	RESISTOR,CHIP 1.8K 1/16W(1608)
R1135	1-218-702-11	s	RESISTOR CHIP 2.7K 1/16W(1608)
R1136	1-218-708-11	s	RESISTOR,CHIP 4.7K 1/16W(1608)
R1137	1-218-748-11	s	RESISTOR,CHIP 220K 1/16W(1608)
R1138	1-218-700-11	s	RESISTOR,CHIP 2.2K 1/16W(1608)
R1139	1-218-718-11	s	RESISTOR CHIP 12K 1/16W (1608)
R1140	1-218-680-11	s	RESISTOR,CHIP 330 1/16W(1608)
R1141	1-218-700-11	s	RESISTOR,CHIP 2.2K 1/16W(1608)
R1142	1-218-714-11	s	RESISTOR,CHIP 8.2K 1/16W(1608)
R1145	1-218-740-11	s	RESISTOR,CHIP 100K 1/16W(1608)
R1146	1-218-708-11	s	RESISTOR,CHIP 4.7K 1/16W(1608)
R1151	1-218-692-11	s	RESISTOR,CHIP 1.0K 1/16W(1608)
R1152	1-218-700-11	s	RESISTOR,CHIP 2.2K 1/16W(1608)
R1153	1-218-660-91	s	RESISTOR CHIP 47 1/16W (1608)
R1154	1-218-668-11	s	RESISTOR,CHIP 100 1/16W (1608)
R1155	1-218-724-11	s	RESISTOR,CHIP 22K 1/16W(1608)
R1156	1-218-724-11	s	RESISTOR,CHIP 22K 1/16W(1608)
R1157	1-218-660-91	s	RESISTOR CHIP 47 1/16W (1608)
R1158	1-218-676-11	s	RESISTOR,CHIP 220 1/16W(1608)
R1159	1-218-676-11	s	RESISTOR,CHIP 220 1/16W(1608)
R1160	1-218-684-11	s	RESISTOR CHIP 470 1/16W (1608)
R1161	1-218-684-11	s	RESISTOR CHIP 470 1/16W (1608)
R1162	1-218-684-11	s	RESISTOR CHIP 470 1/16W (1608)
R1163	1-218-684-11	s	RESISTOR CHIP 470 1/16W (1608)
R1164	1-218-668-11	s	RESISTOR,CHIP 100 1/16W (1608)
R1165	1-218-668-11	s	RESISTOR,CHIP 100 1/16W (1608)
R1166	1-218-718-11	s	RESISTOR CHIP 12K 1/16W (1608)
R1167	1-218-724-11	s	RESISTOR,CHIP 22K 1/16W(1608)

(DM-114 BOARD)

Ref. No. or Q'ty	Part No.	SP	Description
R1168	1-218-740-11	s	RESISTOR,CHIP 100K 1/16W(1608)
R1201	1-218-660-91	s	RESISTOR CHIP 47 1/16W (1608)
R1202	1-218-679-91	s	RESISTOR,METAL FILM 300 1/16W
R1203	1-218-692-11	s	RESISTOR,CHIP 1.0K 1/16W(1608)
R1204	1-218-660-91	s	RESISTOR CHIP 47 1/16W (1608)
R1205	1-218-668-11	s	RESISTOR,CHIP 100 1/16W (1608)
R1206	1-218-692-11	s	RESISTOR,CHIP 1.0K 1/16W(1608)
R1207	1-218-660-91	s	RESISTOR CHIP 47 1/16W (1608)
R1208	1-218-688-11	s	RESISTOR,CHIP 680 1/16W(1608)
R1209	1-218-680-11	s	RESISTOR,CHIP 330 1/16W(1608)
R1210	1-218-680-11	s	RESISTOR,CHIP 330 1/16W(1608)
R1211	1-218-660-91	s	RESISTOR CHIP 47 1/16W (1608)
R1212	1-218-692-11	s	RESISTOR,CHIP 1.0K 1/16W(1608)
R1213	1-218-660-91	s	RESISTOR CHIP 47 1/16W (1608)
R1214	1-218-692-11	s	RESISTOR,CHIP 1.0K 1/16W(1608)
R1215	1-218-700-11	s	RESISTOR,CHIP 2.2K 1/16W(1608)
R1216	1-218-690-11	s	RESISTOR CHIP 820 1/16W (1608)
R1217	1-218-740-11	s	RESISTOR,CHIP 100K 1/16W(1608)
R1218	1-218-690-11	s	RESISTOR CHIP 820 1/16W (1608)
R1219	1-216-857-11	s	RESISTOR,CHIP 1.0M 1/16W 1608
R1220	1-218-724-11	s	RESISTOR,CHIP 22K 1/16W(1608)
R1221	1-218-700-11	s	RESISTOR,CHIP 2.2K 1/16W(1608)
R1222	1-218-704-11	s	RESISTOR,CHIP 3.3K 1/16W(1608)
R1223	1-218-708-11	s	RESISTOR,CHIP 4.7K 1/16W(1608)
R1224	1-218-723-11	s	RESISTOR,CHIP 20K 1/16W(1608)
R1225	1-218-722-11	s	RESISTOR,CHIP 18K 1/16W 1608
R1226	1 218 668 11	s	RESISTOR,CHIP 100 1/16W (1608)
R1227	1-218-668-11	s	RESISTOR,CHIP 100 1/16W (1608)
R1228	1-218-698-11	s	RESISTOR,CHIP 1.8K 1/16W(1608)
R1229	1-218-668-11	s	RESISTOR,CHIP 100 1/16W (1608)
R1230	1-218-698-11	s	RESISTOR,CHIP 1.8K 1/16W(1608)
R1231	1-218-748-11	s	RESISTOR,CHIP 220K 1/16W(1608)
R1232	1-218-708-11	s	RESISTOR,CHIP 4.7K 1/16W(1608)
R1233	1-218-700-11	s	RESISTOR,CHIP 2.2K 1/16W(1608)
R1234	1-218-680-11	s	RESISTOR,CHIP 330 1/16W(1608)
R1235	1-218-700-11	s	RESISTOR,CHIP 2.2K 1/16W(1608)
R1237	1-218-714-11	s	RESISTOR,CHIP 8.2K 1/16W(1608)
R1239	1-218-740-11	s	RESISTOR,CHIP 100K 1/16W(1608)
R1240	1-218-708-11	s	RESISTOR,CHIP 4.7K 1/16W(1608)
R1245	1-218-692-11	s	RESISTOR,CHIP 1.0K 1/16W(1608)
R1246	1-218-700-11	s	RESISTOR,CHIP 2.2K 1/16W(1608)
R1247	1-218-660-91	s	RESISTOR CHIP 47 1/16W (1608)
R1248	1-218-668-11	s	RESISTOR,CHIP 100 1/16W (1608)
R1249	1-218-724-11	s	RESISTOR,CHIP 22K 1/16W(1608)
R1250	1-218-724-11	s	RESISTOR,CHIP 22K 1/16W(1608)
R1251	1-218-660-91	s	RESISTOR CHIP 47 1/16W (1608)
R1252	1-218-676-11	s	RESISTOR,CHIP 220 1/16W(1608)
R1253	1-218-676-11	s	RESISTOR,CHIP 220 1/16W(1608)
R1268	1-218-740-11	s	RESISTOR,CHIP 100K 1/16W(1608)
R1301	1-218-668-11	s	RESISTOR,CHIP 100 1/16W (1608)
R1302	1-218-700-11	s	RESISTOR,CHIP 2.2K 1/16W(1608)
R1303	1-218-668-11	s	RESISTOR,CHIP 100 1/16W (1608)
R1304	1-218-668-11	s	RESISTOR,CHIP 100 1/16W (1608)
R1305	1-218-668-11	s	RESISTOR,CHIP 100 1/16W (1608)
R1306	1-218-708-11	s	RESISTOR,CHIP 4.7K 1/16W(1608)
R1307	1-218-724-11	s	RESISTOR,CHIP 22K 1/16W(1608)
R1308	1-218-714-11	s	RESISTOR,CHIP 8.2K 1/16W(1608)
R1309	1-218-716-11	s	RESISTOR,CHIP 10K 1/16W(1608)
R1310	1-218-726-11	s	RESISTOR CHIP 27K 1/16W (1608)

(DM-114 BOARD)

Ref. No. or Q'ty	Part No.	SP	Description
R1311	1-218-660-91	s	RESISTOR CHIP 47 1/16W (1608)
R1312	1-218-694-11	s	RESISTOR CHIP 1.2K1/16W(1608)
R1313	1-218-668-11	s	RESISTOR,CHIP 100 1/16W (1608)
R1314	1-218-700-11	s	RESISTOR,CHIP 2.2K 1/16W(1608)
R1315	1-218-676-11	s	RESISTOR,CHIP 220 1/16W(1608)
R1316	1-218-692-11	s	RESISTOR,CHIP 1.0K 1/16W(1608)
R1317	1-218-700-11	s	RESISTOR,CHIP 2.2K 1/16W(1608)
R1318	1-218-684-11	s	RESISTOR CHIP 470 1/16W (1608)
R1319	1-218-716-11	s	RESISTOR,CHIP 10K 1/16W(1608)
R1320	1-218-716-11	s	RESISTOR,CHIP 10K 1/16W(1608)
R1321	1-218-728-11	s	RESISTOR,METAL 33K 1/16W
R1322	1-218-728-11	s	RESISTOR,METAL 33K 1/16W
R1323	1-216-864-11	s	RESISTOR,CHIP 0 1/16W (1608)
R1324	1-218-716-11	s	RESISTOR,CHIP 10K 1/16W(1608)
R1325	1-218-724-11	s	RESISTOR,CHIP 22K 1/16W(1608)
R1326	1-218-724-11	s	RESISTOR,CHIP 22K 1/16W(1608)
R1328	1-218-740-11	s	RESISTOR,CHIP 100K 1/16W(1608)
R1329	1-218-716-11	s	RESISTOR,CHIP 10K 1/16W(1608)
R1330	1-218-740-11	s	RESISTOR,CHIP 100K 1/16W(1608)
R1331	1-218-692-11	s	RESISTOR,CHIP 1.0K 1/16W(1608)
R1332	1-218-668-11	s	RESISTOR,CHIP 100 1/16W (1608)
R1333	1-218-668-11	s	RESISTOR,CHIP 100 1/16W (1608)
R1334	1-218-700-11	s	RESISTOR,CHIP 2.2K 1/16W(1608)
R1335	1-218-668-11	s	RESISTOR,CHIP 100 1/16W (1608)
R1336	1-218-668-11	s	RESISTOR,CHIP 100 1/16W (1608)
R1337	1-218-668-11	s	RESISTOR,CHIP 100 1/16W (1608)
R1338	1 218 724 11	s	RESISTOR,CHIP 22K 1/16W(1608)
R1339	1-218-730-11	s	RESISTOR METAL FILM CHIP 39K
R1340	1-218-716-11	s	RESISTOR,CHIP 10K 1/16W(1608)
R1341	1-218-716-11	s	RESISTOR,CHIP 10K 1/16W(1608)
R1342	1-218-716-11	s	RESISTOR,CHIP 10K 1/16W(1608)
R1343	1-218-714-11	s	RESISTOR,CHIP 8.2K 1/16W(1608)
R1344	1-218-700-11	s	RESISTOR,CHIP 2.2K 1/16W(1608)
R1345	1-218-684-11	s	RESISTOR CHIP 470 1/16W (1608)
R1346	1-218-716-11	s	RESISTOR,CHIP 10K 1/16W(1608)
R1347	1-218-748-11	s	RESISTOR,CHIP 220K 1/16W(1608)
R1349	1-218-684-11	s	RESISTOR CHIP 470 1/16W (1608)
R1350	1-216-863-11	s	RESISTOR,CHIP 3.3M 1/16W 1608
R1351	1-218-702-11	s	RESISTOR CHIP 2.7K 1/16W(1608)
R1352	1-218-686-11	s	RESISTOR CHIP 560 1/16W (1608)
R1353	1-218-708-11	s	RESISTOR,CHIP 4.7K 1/16W(1608)
R1354	1-218-684-11	s	RESISTOR CHIP 470 1/16W (1608)
R1355	1-218-676-11	s	RESISTOR,CHIP 220 1/16W(1608)
R1356	1-218-676-11	s	RESISTOR,CHIP 220 1/16W(1608)
R1357	1-218-676-11	s	RESISTOR,CHIP 220 1/16W(1608)
R1358	1-216-863-11	s	RESISTOR,CHIP 3.3M 1/16W 1608
R1359	1-218-716-11	s	RESISTOR,CHIP 10K 1/16W(1608)
R1360	1-218-701-11	s	RESISTOR,CHIP 2.4K 1/16W(1608)
R1361	1-218-664-11	s	RESISTOR,CHIP 68 1/16W (1608)
R1362	1-218-692-11	s	RESISTOR,CHIP 1.0K 1/16W(1608)
R1363	1-218-722-11	s	RESISTOR,CHIP 18K 1/16W 1608
R1364	1-218-717-11	s	RESISTOR,CHIP 11K 1/16W (1608)
R1365	1-218-720-11	s	RESISTOR,CHIP 15K 1/16W(1608)
R1366	1-218-728-11	s	RESISTOR,METAL 33K 1/16W
R1367	1-218-700-11	s	RESISTOR,CHIP 2.2K 1/16W(1608)
R1368	1-218-694-11	s	RESISTOR CHIP 1.2K1/16W(1608)
R1369	1-218-708-11	s	RESISTOR,CHIP 4.7K 1/16W(1608)
R1370	1-216-857-11	s	RESISTOR,CHIP 1.0M 1/16W 1608
R1371	1-218-668-11	s	RESISTOR,CHIP 100 1/16W (1608)

(DM-114 BOARD)

Ref. No. or Q'ty	Part No.	SP	Description
R1372	1-218-676-11	s	RESISTOR,CHIP 220 1/16W(1608)
R1373	1-218-722-11	s	RESISTOR,CHIP 18K 1/16W 1608
R1374	1-218-676-11	s	RESISTOR,CHIP 220 1/16W(1608)
R1375	1-218-716-11	s	RESISTOR,CHIP 10K 1/16W(1608)
R1376	1-218-704-11	s	RESISTOR,CHIP 3.3K 1/16W(1608)
R1377	1-218-716-11	s	RESISTOR,CHIP 10K 1/16W(1608)
R1378	1-218-700-11	s	RESISTOR,CHIP 2.2K 1/16W(1608)
R1379	1-218-718-11	s	RESISTOR CHIP 12K 1/16W (1608)
R1380	1-218-668-11	s	RESISTOR,CHIP 100 1/16W (1608)
R1381	1-218-676-11	s	RESISTOR,CHIP 220 1/16W(1608)
R1382	1-218-687-11	s	RESISTOR CHIP 620 1/16W (1608)
R1383	1-218-676-11	s	RESISTOR,CHIP 220 1/16W(1608)
R1384	1-218-700-11	s	RESISTOR,CHIP 2.2K 1/16W(1608)
R1385	1-218-700-11	s	RESISTOR,CHIP 2.2K 1/16W(1608)
R1386	1-218-676-11	s	RESISTOR,CHIP 220 1/16W(1608)
R1387	1-218-680-11	s	RESISTOR,CHIP 330 1/16W(1608)
R1388	1-218-704-11	s	RESISTOR,CHIP 3.3K 1/16W(1608)
R1389	1-218-668-11	s	RESISTOR,CHIP 100 1/16W (1608)
R1390	1-218-703-11	s	RESISTOR,METAL 3.0K 1/16(1608)
R1391	1-218-718-11	s	RESISTOR CHIP 12K 1/16W (1608)
R1392	1-218-732-11	s	RESISTOR,CHIP 47K 1/16W(1608)
R1393	1-218-732-11	s	RESISTOR,CHIP 47K 1/16W(1608)
R1394	1-218-700-11	s	RESISTOR,CHIP 2.2K 1/16W(1608)
R1395	1-218-700-11	s	RESISTOR,CHIP 2.2K 1/16W(1608)
R1396	1-218-704-11	s	RESISTOR,CHIP 3.3K 1/16W(1608)
R1397	1-218-704-11	s	RESISTOR,CHIP 3.3K 1/16W(1608)
R1398	1 218 752 11	s	RESISTOR,CHIP 330K 1/16W(1608)
R1399	1-218-700-11	s	RESISTOR,CHIP 2.2K 1/16W(1608)
R1400	1-218-716-11	s	RESISTOR,CHIP 10K 1/16W(1608)
R1401	1-218-716-11	s	RESISTOR,CHIP 10K 1/16W(1608)
R1402	1-218-716-11	s	RESISTOR,CHIP 10K 1/16W(1608)
R1403	1-218-704-11	s	RESISTOR,CHIP 3.3K 1/16W(1608)
R1404	1-218-736-11	s	RESISTOR,CHIP 68K 1/16W(1608)
R1406	1-218-668-11	s	RESISTOR,CHIP 100 1/16W (1608)
R1407	1-218-692-11	s	RESISTOR,CHIP 1.0K 1/16W(1608)
R1408	1-218-692-11	s	RESISTOR,CHIP 1.0K 1/16W(1608)
R1409	1-218-692-11	s	RESISTOR,CHIP 1.0K 1/16W(1608)
R1410	1-218-722-11	s	RESISTOR,CHIP 18K 1/16W 1608
R1411	1-218-692-11	s	RESISTOR,CHIP 1.0K 1/16W(1608)
R1412	1-218-708-11	s	RESISTOR,CHIP 4.7K 1/16W(1608)
R1413	1-218-704-11	s	RESISTOR,CHIP 3.3K 1/16W(1608)
R1414	1-218-724-11	s	RESISTOR,CHIP 22K 1/16W(1608)
R1415	1-218-725-11	s	RESISTOR,CHIP 24K 1/16W(1608)
R1416	1-218-699-11	s	RESISTOR CHIP 2.0K 1/16W(1608)
R1417	1-218-692-11	s	RESISTOR,CHIP 1.0K 1/16W(1608)
R1418	1-218-696-11	s	RESISTOR CHIP 1.5K 1/16W(1608)
R1419	1-218-708-11	s	RESISTOR,CHIP 4.7K 1/16W(1608)
R1420	1-216-864-11	s	RESISTOR,CHIP 0 1/16W (1608)
R1421	1-218-708-11	s	RESISTOR,CHIP 4.7K 1/16W(1608)
R1422	1-218-660-91	s	RESISTOR CHIP 47 1/16W (1608)
R1423	1-218-676-11	s	RESISTOR,CHIP 220 1/16W(1608)
R1424	1-218-676-11	s	RESISTOR,CHIP 220 1/16W(1608)
R1425	1-218-660-91	s	RESISTOR CHIP 47 1/16W (1608)
R1426	1-216-864-11	s	RESISTOR,CHIP 0 1/16W (1608)
R1428	1-218-660-91	s	RESISTOR CHIP 47 1/16W (1608)
R1429	1-218-668-11	s	RESISTOR,CHIP 100 1/16W (1608)
R1430	1-218-668-11	s	RESISTOR,CHIP 100 1/16W (1608)
R1431	1-218-668-11	s	RESISTOR,CHIP 100 1/16W (1608)
R1432	1-218-668-11	s	RESISTOR,CHIP 100 1/16W (1608)

(DM-114 BOARD)

Ref. No. or Q'ty	Part No.	SP	Description
R1433	1-218-668-11	s	RESISTOR,CHIP 100 1/16W (1608)
R1434	1-218-668-11	s	RESISTOR,CHIP 100 1/16W (1608)
R1435	1-218-668-11	s	RESISTOR,CHIP 100 1/16W (1608)
R1436	1-218-668-11	s	RESISTOR,CHIP 100 1/16W (1608)
R1438	1-218-699-11	s	RESISTOR CHIP 2.0K 1/16W(1608)
R1439	1-218-710-11	s	RESISTOR,CHIP 5.6K 1/16W(1608)
R1441	1-218-700-11	s	RESISTOR,CHIP 2.2K 1/16W(1608)
R1444	1-216-864-11	s	RESISTOR,CHIP 0 1/16W (1608)
R1501	1-218-668-11	s	RESISTOR,CHIP 100 1/16W (1608)
R1502	1-218-668-11	s	RESISTOR,CHIP 100 1/16W (1608)
R1503	1-218-668-11	s	RESISTOR,CHIP 100 1/16W (1608)
R1504	1-218-668-11	s	RESISTOR,CHIP 100 1/16W (1608)
R1505	1-218-724-11	s	RESISTOR,CHIP 22K 1/16W(1608)
R1506	1-218-714-11	s	RESISTOR,CHIP 8.2K 1/16W(1608)
R1507	1-218-660-91	s	RESISTOR CHIP 47 1/16W (1608)
R1508	1-218-716-11	s	RESISTOR,CHIP 10K 1/16W(1608)
R1509	1-218-726-11	s	RESISTOR CHIP 27K 1/16W (1608)
R1510	1-218-692-11	s	RESISTOR,CHIP 1.0K 1/16W(1608)
R1511	1-218-668-11	s	RESISTOR,CHIP 100 1/16W (1608)
R1512	1-218-700-11	s	RESISTOR,CHIP 2.2K 1/16W(1608)
R1513	1-218-676-11	s	RESISTOR,CHIP 220 1/16W(1608)
R1514	1-218-692-11	s	RESISTOR,CHIP 1.0K 1/16W(1608)
R1515	1-218-700-11	s	RESISTOR,CHIP 2.2K 1/16W(1608)
R1516	1-218-684-11	s	RESISTOR CHIP 470 1/16W (1608)
R1517	1-218-716-11	s	RESISTOR,CHIP 10K 1/16W(1608)
R1518	1-218-716-11	s	RESISTOR,CHIP 10K 1/16W(1608)
R1519	1 218 728 11	s	RESISTOR,METAL 33K 1/16W
R1520	1-218-728-11	s	RESISTOR,METAL 33K 1/16W
R1521	1-216-864-11	s	RESISTOR,CHIP 0 1/16W (1608)
R1522	1-218-732-11	s	RESISTOR,CHIP 47K 1/16W(1608)
R1523	1-216-864-11	s	RESISTOR,CHIP 0 1/16W (1608)
R1524	1-218-716-11	s	RESISTOR,CHIP 10K 1/16W(1608)
R1525	1-218-724-11	s	RESISTOR,CHIP 22K 1/16W(1608)
R1526	1-218-724-11	s	RESISTOR,CHIP 22K 1/16W(1608)
R1528	1-218-740-11	s	RESISTOR,CHIP 100K 1/16W(1608)
R1529	1-218-716-11	s	RESISTOR,CHIP 10K 1/16W(1608)
R1530	1-218-740-11	s	RESISTOR,CHIP 100K 1/16W(1608)
R1531	1-216-864-11	s	RESISTOR,CHIP 0 1/16W (1608)
R1533	1-218-668-11	s	RESISTOR,CHIP 100 1/16W (1608)
R1534	1-218-668-11	s	RESISTOR,CHIP 100 1/16W (1608)
R1535	1-218-668-11	s	RESISTOR,CHIP 100 1/16W (1608)
R1536	1-218-668-11	s	RESISTOR,CHIP 100 1/16W (1608)
R1537	1-218-700-11	s	RESISTOR,CHIP 2.2K 1/16W(1608)
R1538	1-218-730-11	s	RESISTOR METAL FILM CHIP 39K
R1539	1-218-716-11	s	RESISTOR,CHIP 10K 1/16W(1608)
R1541	1-218-716-11	s	RESISTOR,CHIP 10K 1/16W(1608)
R1542	1-218-724-11	s	RESISTOR,CHIP 22K 1/16W(1608)
R1544	1-218-716-11	s	RESISTOR,CHIP 10K 1/16W(1608)
R1545	1-218-716-11	s	RESISTOR,CHIP 10K 1/16W(1608)
R1546	1-218-716-11	s	RESISTOR,CHIP 10K 1/16W(1608)
R1547	1-218-716-11	s	RESISTOR,CHIP 10K 1/16W(1608)
R1548	1-218-716-11	s	RESISTOR,CHIP 10K 1/16W(1608)
R1549	1-218-716-11	s	RESISTOR,CHIP 10K 1/16W(1608)
R1550	1-218-716-11	s	RESISTOR,CHIP 10K 1/16W(1608)
R1551	1-218-722-11	s	RESISTOR,CHIP 18K 1/16W 1608
R1552	1-218-722-11	s	RESISTOR,CHIP 18K 1/16W 1608
R1553	1-218-716-11	s	RESISTOR,CHIP 10K 1/16W(1608)
R1554	1-218-716-11	s	RESISTOR,CHIP 10K 1/16W(1608)
R1555	1-218-668-11	s	RESISTOR,CHIP 100 1/16W (1608)

(DM-114 BOARD)

Ref. No. or Q'ty	Part No.	SP	Description
R1556	1-218-702-11	s	RESISTOR CHIP 2.7K 1/16W(1608)
R1557	1-216-864-11	s	RESISTOR,CHIP 0 1/16W (1608)
R1558	1-218-728-11	s	RESISTOR,METAL 33K 1/16W
R1559	1-218-700-11	s	RESISTOR,CHIP 2.2K 1/16W(1608)
R1560	1-218-684-11	s	RESISTOR CHIP 470 1/16W (1608)
R1561	1-218-696-11	s	RESISTOR CHIP 1.5K 1/16W(1608)
R1562	1-216-864-11	s	RESISTOR,CHIP 0 1/16W (1608)
R1563	1-218-684-11	s	RESISTOR CHIP 470 1/16W (1608)
R1564	1-218-719-11	s	RESISTOR,METAL 13K 1/16
R1565	1-218-722-11	s	RESISTOR,CHIP 18K 1/16W 1608
R1566	1-218-718-11	s	RESISTOR CHIP 12K 1/16W (1608)
R1567	1-216-863-11	s	RESISTOR,CHIP 3.3M 1/16W 1608
R1568	1-218-684-11	s	RESISTOR CHIP 470 1/16W (1608)
R1569	1-218-716-11	s	RESISTOR,CHIP 10K 1/16W(1608)
R1570	1-218-716-11	s	RESISTOR,CHIP 10K 1/16W(1608)
R1571	1-218-676-11	s	RESISTOR,CHIP 220 1/16W(1608)
R1572	1-218-676-11	s	RESISTOR,CHIP 220 1/16W(1608)
R1573	1-218-716-11	s	RESISTOR,CHIP 10K 1/16W(1608)
R1574	1-218-701-11	s	RESISTOR,CHIP 2.4K 1/16W(1608)
R1575	1-218-676-11	s	RESISTOR,CHIP 220 1/16W(1608)
R1576	1-216-855-11	s	RESISTOR,CHIP 680K 1/16W 1608
R1577	1-218-716-11	s	RESISTOR,CHIP 10K 1/16W(1608)
R1578	1-218-703-11	s	RESISTOR,METAL 3.0K 1/16(1608)
R1579	1-218-662-11	s	RESISTOR CHIP 56 1/16W (1608)
R1580	1-218-692-11	s	RESISTOR,CHIP 1.0K 1/16W(1608)
R1581	1-218-716-11	s	RESISTOR,CHIP 10K 1/16W(1608)
R1582	1 218 732 11	s	RESISTOR,CHIP 47K 1/16W(1608)
R1583	1-218-702-11	s	RESISTOR CHIP 2.7K 1/16W(1608)
R1584	1-218-696-11	s	RESISTOR CHIP 1.5K 1/16W(1608)
R1585	1-216-857-11	s	RESISTOR,CHIP 1.0M 1/16W 1608
R1586	1-218-708-11	s	RESISTOR,CHIP 4.7K 1/16W(1608)
R1587	1-218-684-11	s	RESISTOR CHIP 470 1/16W (1608)
R1588	1-218-676-11	s	RESISTOR,CHIP 220 1/16W(1608)
R1589	1-218-676-11	s	RESISTOR,CHIP 220 1/16W(1608)
R1590	1-218-704-11	s	RESISTOR,CHIP 3.3K 1/16W(1608)
R1591	1-218-716-11	s	RESISTOR,CHIP 10K 1/16W(1608)
R1592	1-218-716-11	s	RESISTOR,CHIP 10K 1/16W(1608)
R1593	1-218-700-11	s	RESISTOR,CHIP 2.2K 1/16W(1608)
R1594	1-218-718-11	s	RESISTOR CHIP 12K 1/16W (1608)
R1595	1-218-676-11	s	RESISTOR,CHIP 220 1/16W(1608)
R1596	1-218-676-11	s	RESISTOR,CHIP 220 1/16W(1608)
R1597	1-218-680-11	s	RESISTOR,CHIP 330 1/16W(1608)
R1598	1-218-668-11	s	RESISTOR,CHIP 100 1/16W (1608)
R1599	1-218-702-11	s	RESISTOR CHIP 2.7K 1/16W(1608)
R1600	1-218-676-11	s	RESISTOR,CHIP 220 1/16W(1608)
R1601	1-218-680-11	s	RESISTOR,CHIP 330 1/16W(1608)
R1602	1-218-704-11	s	RESISTOR,CHIP 3.3K 1/16W(1608)
R1603	1-218-700-11	s	RESISTOR,CHIP 2.2K 1/16W(1608)
R1604	1-218-668-11	s	RESISTOR,CHIP 100 1/16W (1608)
R1605	1-218-703-11	s	RESISTOR,METAL 3.0K 1/16(1608)
R1606	1-218-718-11	s	RESISTOR CHIP 12K 1/16W (1608)
R1607	1-218-732-11	s	RESISTOR,CHIP 47K 1/16W(1608)
R1608	1-218-732-11	s	RESISTOR,CHIP 47K 1/16W(1608)
R1609	1-218-700-11	s	RESISTOR,CHIP 2.2K 1/16W(1608)
R1610	1-218-700-11	s	RESISTOR,CHIP 2.2K 1/16W(1608)
R1611	1-218-704-11	s	RESISTOR,CHIP 3.3K 1/16W(1608)
R1612	1-218-752-11	s	RESISTOR,CHIP 330K 1/16W(1608)
R1613	1-218-704-11	s	RESISTOR,CHIP 3.3K 1/16W(1608)
R1614	1-218-700-11	s	RESISTOR,CHIP 2.2K 1/16W(1608)

(DM-114 BOARD)

Ref. No. or Q'ty	Part No.	SP	Description
R1615	1-218-716-11	s	RESISTOR,CHIP 10K 1/16W(1608)
R1616	1-218-736-11	s	RESISTOR,CHIP 68K 1/16W(1608)
R1617	1-218-716-11	s	RESISTOR,CHIP 10K 1/16W(1608)
R1618	1-218-668-11	s	RESISTOR,CHIP 100 1/16W (1608)
R1619	1-218-704-11	s	RESISTOR,CHIP 3.3K 1/16W(1608)
R1620	1-218-692-11	s	RESISTOR,CHIP 1.0K 1/16W(1608)
R1621	1-218-692-11	s	RESISTOR,CHIP 1.0K 1/16W(1608)
R1622	1-218-722-11	s	RESISTOR,CHIP 18K 1/16W 1608
R1623	1-218-702-11	s	RESISTOR CHIP 2.7K 1/16W(1608)
R1624	1-218-692-11	s	RESISTOR,CHIP 1.0K 1/16W(1608)
R1625	1-218-680-11	s	RESISTOR,CHIP 330 1/16W(1608)
R1626	1-218-708-11	s	RESISTOR,CHIP 4.7K 1/16W(1608)
R1627	1-218-704-11	s	RESISTOR,CHIP 3.3K 1/16W(1608)
R1628	1-218-724-11	s	RESISTOR,CHIP 22K 1/16W(1608)
R1629	1-218-725-11	s	RESISTOR,CHIP 24K 1/16W(1608)
R1630	1-218-699-11	s	RESISTOR CHIP 2.0K 1/16W(1608)
R1631	1-218-692-11	s	RESISTOR,CHIP 1.0K 1/16W(1608)
R1632	1-218-696-11	s	RESISTOR CHIP 1.5K 1/16W(1608)
R1633	1-218-708-11	s	RESISTOR,CHIP 4.7K 1/16W(1608)
R1634	1-216-864-11	s	RESISTOR,CHIP 0 1/16W (1608)
R1635	1-218-708-11	s	RESISTOR,CHIP 4.7K 1/16W(1608)
R1636	1-218-660-91	s	RESISTOR CHIP 47 1/16W (1608)
R1637	1-218-676-11	s	RESISTOR,CHIP 220 1/16W(1608)
R1638	1-218-676-11	s	RESISTOR,CHIP 220 1/16W(1608)
R1639	1-218-660-91	s	RESISTOR CHIP 47 1/16W (1608)
R1640	1-218-660-91	s	RESISTOR CHIP 47 1/16W (1608)
R1641	1 218 668 11	s	RESISTOR,CHIP 100 1/16W (1608)
R1642	1-218-668-11	s	RESISTOR,CHIP 100 1/16W (1608)
R1643	1-218-668-11	s	RESISTOR,CHIP 100 1/16W (1608)
R1644	1-218-668-11	s	RESISTOR,CHIP 100 1/16W (1608)
R1645	1-218-668-11	s	RESISTOR,CHIP 100 1/16W (1608)
R1649	1-218-708-11	s	RESISTOR,CHIP 4.7K 1/16W(1608)
R1650	1-216-864-11	s	RESISTOR,CHIP 0 1/16W (1608)
R1651	1-216-864-11	s	RESISTOR,CHIP 0 1/16W (1608)
R1702	1-218-660-91	s	RESISTOR CHIP 47 1/16W (1608)
R1703	1-218-660-91	s	RESISTOR CHIP 47 1/16W (1608)
R1704	1-218-660-91	s	RESISTOR CHIP 47 1/16W (1608)
R1705	1-218-660-91	s	RESISTOR CHIP 47 1/16W (1608)
R1706	1-218-668-11	s	RESISTOR,CHIP 100 1/16W (1608)
R1707	1-218-668-11	s	RESISTOR,CHIP 100 1/16W (1608)
R1708	1-218-700-11	s	RESISTOR,CHIP 2.2K 1/16W(1608)
R1709	1-218-700-11	s	RESISTOR,CHIP 2.2K 1/16W(1608)
R1710	1-218-716-11	s	RESISTOR,CHIP 10K 1/16W(1608)
R1711	1-218-660-91	s	RESISTOR CHIP 47 1/16W (1608)
R1712	1-218-660-91	s	RESISTOR CHIP 47 1/16W (1608)
R1713	1-218-660-91	s	RESISTOR CHIP 47 1/16W (1608)
R1714	1-218-660-91	s	RESISTOR CHIP 47 1/16W (1608)
R1715	1-218-660-91	s	RESISTOR CHIP 47 1/16W (1608)
R1716	1-218-660-91	s	RESISTOR CHIP 47 1/16W (1608)
R1717	1-216-864-11	s	RESISTOR,CHIP 0 1/16W (1608)
R1719	1-218-668-11	s	RESISTOR,CHIP 100 1/16W (1608)
R1720	1-218-740-11	s	RESISTOR,CHIP 100K 1/16W(1608)
R1722	1-216-864-11	s	RESISTOR,CHIP 0 1/16W (1608)
R1724	1-218-668-11	s	RESISTOR,CHIP 100 1/16W (1608)
R1725	1-218-740-11	s	RESISTOR,CHIP 100K 1/16W(1608)
R1726	1-218-740-11	s	RESISTOR,CHIP 100K 1/16W(1608)
R1727	1-218-660-91	s	RESISTOR CHIP 47 1/16W (1608)
R1728	1-218-660-91	s	RESISTOR CHIP 47 1/16W (1608)
R1731	1-218-668-11	s	RESISTOR,CHIP 100 1/16W (1608)

(DM-114 BOARD)

Ref. No. or Q'ty	Part No.	SP	Description
R1732	1-218-668-11	s	RESISTOR,CHIP 100 1/16W (1608)
R1733	1-218-700-11	s	RESISTOR,CHIP 2.2K 1/16W(1608)
R1734	1-218-740-11	s	RESISTOR,CHIP 100K 1/16W(1608)
R1737	1-218-736-11	s	RESISTOR,CHIP 68K 1/16W(1608)
R1738	1-218-708-11	s	RESISTOR,CHIP 4.7K 1/16W(1608)
R1800	1-218-740-11	s	RESISTOR,CHIP 100K 1/16W(1608)
R1801	1-218-740-11	s	RESISTOR,CHIP 100K 1/16W(1608)
R1802	1-218-740-11	s	RESISTOR,CHIP 100K 1/16W(1608)
R1803	1-218-740-11	s	RESISTOR,CHIP 100K 1/16W(1608)
R1804	1-218-740-11	s	RESISTOR,CHIP 100K 1/16W(1608)
R1805	1-218-740-11	s	RESISTOR,CHIP 100K 1/16W(1608)
R1806	1-218-676-11	s	RESISTOR,CHIP 220 1/16W(1608)
R1807	1-218-660-91	s	RESISTOR CHIP 47 1/16W (1608)
R1808	1-218-676-11	s	RESISTOR,CHIP 220 1/16W(1608)
R1809	1-218-660-91	s	RESISTOR CHIP 47 1/16W (1608)
R1810	1-218-676-11	s	RESISTOR,CHIP 220 1/16W(1608)
R1811	1-218-676-11	s	RESISTOR,CHIP 220 1/16W(1608)
R1812	1-218-676-11	s	RESISTOR,CHIP 220 1/16W(1608)
R1813	1-218-660-91	s	RESISTOR CHIP 47 1/16W (1608)
R1814	1-218-692-11	s	RESISTOR,CHIP 1.0K 1/16W(1608)
R1815	1-218-660-91	s	RESISTOR CHIP 47 1/16W (1608)
R1816	1-218-660-91	s	RESISTOR CHIP 47 1/16W (1608)
R1817	1-218-660-91	s	RESISTOR CHIP 47 1/16W (1608)
R1819	1-216-864-11	s	RESISTOR,CHIP 0 1/16W (1608)
R1820	1-218-732-11	s	RESISTOR,CHIP 47K 1/16W(1608)
R1821	1-218-660-91	s	RESISTOR CHIP 47 1/16W (1608)
R1822	1 218 732 11	s	RESISTOR,CHIP 47K 1/16W(1608)
R1823	1-218-740-11	s	RESISTOR,CHIP 100K 1/16W(1608)
R1824	1-218-684-11	s	RESISTOR CHIP 470 1/16W (1608)
R1825	1-218-660-91	s	RESISTOR CHIP 47 1/16W (1608)
R1826	1-218-692-11	s	RESISTOR,CHIP 1.0K 1/16W(1608)
R1828	1-218-692-11	s	RESISTOR,CHIP 1.0K 1/16W(1608)
R1829	1-218-692-11	s	RESISTOR,CHIP 1.0K 1/16W(1608)
R1831	1-218-700-11	s	RESISTOR,CHIP 2.2K 1/16W(1608)
R1832	1-218-692-11	s	RESISTOR,CHIP 1.0K 1/16W(1608)
R1833	1-218-692-11	s	RESISTOR,CHIP 1.0K 1/16W(1608)
R1834	1-218-668-11	s	RESISTOR,CHIP 100 1/16W (1608)
R1835	1-218-692-11	s	RESISTOR,CHIP 1.0K 1/16W(1608)
R1836	1-218-716-11	s	RESISTOR,CHIP 10K 1/16W(1608)
R1840	1-218-692-11	s	RESISTOR,CHIP 1.0K 1/16W(1608)
R1841	1-218-676-11	s	RESISTOR,CHIP 220 1/16W(1608)
R1842	1-218-676-11	s	RESISTOR,CHIP 220 1/16W(1608)
R1843	1-218-676-11	s	RESISTOR,CHIP 220 1/16W(1608)
R1844	1-218-676-11	s	RESISTOR,CHIP 220 1/16W(1608)
R1846	1-216-864-11	s	RESISTOR,CHIP 0 1/16W (1608)
R1848	1-218-676-11	s	RESISTOR,CHIP 220 1/16W(1608)
R1852	1-218-716-11	s	RESISTOR,CHIP 10K 1/16W(1608)
R1853	1-216-864-11	s	RESISTOR,CHIP 0 1/16W (1608)
R1854	1-218-740-11	s	RESISTOR,CHIP 100K 1/16W(1608)
R1855	1-218-692-11	s	RESISTOR,CHIP 1.0K 1/16W(1608)
R1856	1-218-740-11	s	RESISTOR,CHIP 100K 1/16W(1608)
R1857	1-218-740-11	s	RESISTOR,CHIP 100K 1/16W(1608)
R1858	1-218-740-11	s	RESISTOR,CHIP 100K 1/16W(1608)
R1859	1-218-716-11	s	RESISTOR,CHIP 10K 1/16W(1608)
R1860	1-218-732-11	s	RESISTOR,CHIP 47K 1/16W(1608)
R1861	1-218-716-11	s	RESISTOR,CHIP 10K 1/16W(1608)
R1862	1-218-716-11	s	RESISTOR,CHIP 10K 1/16W(1608)
R1863	1-218-680-11	s	RESISTOR,CHIP 330 1/16W(1608)
R1864	1-218-680-11	s	RESISTOR,CHIP 330 1/16W(1608)

(DM-114 BOARD)

Ref. No. or Q'ty	Part No.	SP	Description
R1865	1-218-716-11	s	RESISTOR,CHIP 10K 1/16W(1608)
R1867	1-218-732-11	s	RESISTOR,CHIP 47K 1/16W(1608)
R1868	1-218-692-11	s	RESISTOR,CHIP 1.0K 1/16W(1608)
R1869	1-218-692-11	s	RESISTOR,CHIP 1.0K 1/16W(1608)
R1870	1-218-708-11	s	RESISTOR,CHIP 4.7K 1/16W(1608)
R1871	1-218-732-11	s	RESISTOR,CHIP 47K 1/16W(1608)
R1872	1-218-716-11	s	RESISTOR,CHIP 10K 1/16W(1608)
R1873	1-218-740-11	s	RESISTOR,CHIP 100K 1/16W(1608)
R1874	1-218-716-11	s	RESISTOR,CHIP 10K 1/16W(1608)
R1875	1-218-740-11	s	RESISTOR,CHIP 100K 1/16W(1608)
R1876	1-218-676-11	s	RESISTOR,CHIP 220 1/16W(1608)
R1877	1-218-740-11	s	RESISTOR,CHIP 100K 1/16W(1608)
R1878	1-218-723-11	s	RESISTOR,CHIP 20K 1/16W(1608)
R1879	1-218-708-11	s	RESISTOR,CHIP 4.7K 1/16W(1608)
R1880	1-218-660-91	s	RESISTOR CHIP 47 1/16W (1608)
R1881	1-218-723-11	s	RESISTOR,CHIP 20K 1/16W(1608)
R1882	1-218-700-11	s	RESISTOR,CHIP 2.2K 1/16W(1608)
R1883	1-218-710-11	s	RESISTOR,CHIP 5.6K 1/16W(1608)
R1884	1-218-700-11	s	RESISTOR,CHIP 2.2K 1/16W(1608)
R1885	1-218-700-11	s	RESISTOR,CHIP 2.2K 1/16W(1608)
R1886	1-218-660-91	s	RESISTOR CHIP 47 1/16W (1608)
R1887	1-218-692-11	s	RESISTOR,CHIP 1.0K 1/16W(1608)
R1888	1-218-748-11	s	RESISTOR,CHIP 220K 1/16W(1608)
R1889	1-218-748-11	s	RESISTOR,CHIP 220K 1/16W(1608)
R1890	1-218-716-11	s	RESISTOR,CHIP 10K 1/16W(1608)
R1891	1-218-724-11	s	RESISTOR,CHIP 22K 1/16W(1608)
R1892	1 218 728 11	s	RESISTOR,METAL 33K 1/16W
R1893	1-218-720-11	s	RESISTOR,CHIP 15K 1/16W(1608)
R1894	1-218-660-91	s	RESISTOR CHIP 47 1/16W (1608)
R1895	1-216-864-11	s	RESISTOR,CHIP 0 1/16W (1608)
R1896	1-218-716-11	s	RESISTOR,CHIP 10K 1/16W(1608)
R1897	1-218-668-11	s	RESISTOR,CHIP 100 1/16W (1608)
R1898	1-218-692-11	s	RESISTOR,CHIP 1.0K 1/16W(1608)
R1899	1-218-722-11	s	RESISTOR,CHIP 18K 1/16W 1608
R1900	1-218-722-11	s	RESISTOR,CHIP 18K 1/16W 1608
R1901	1-216-864-11	s	RESISTOR,CHIP 0 1/16W (1608)
R1902	1-218-700-11	s	RESISTOR,CHIP 2.2K 1/16W(1608)
R1903	1-218-700-11	s	RESISTOR,CHIP 2.2K 1/16W(1608)
R1904	1-218-700-11	s	RESISTOR,CHIP 2.2K 1/16W(1608)
R1905	1-218-700-11	s	RESISTOR,CHIP 2.2K 1/16W(1608)
R1906	1-218-716-11	s	RESISTOR,CHIP 10K 1/16W(1608)
R1907	1-218-706-11	s	RESISTOR,CHIP 3.9K 1/16W(1608)
R1908	1-218-706-11	s	RESISTOR,CHIP 3.9K 1/16W(1608)
R1909	1-218-668-11	s	RESISTOR,CHIP 100 1/16W (1608)
R1910	1-218-706-11	s	RESISTOR,CHIP 3.9K 1/16W(1608)
R1911	1-218-692-11	s	RESISTOR,CHIP 1.0K 1/16W(1608)
R1912	1-218-692-11	s	RESISTOR,CHIP 1.0K 1/16W(1608)
R1913	1-218-735-11	s	RESISTOR CHIP 62K 1/16W(1608)
R1914	1-218-740-11	s	RESISTOR,CHIP 100K 1/16W(1608)
R1915	1-216-864-11	s	RESISTOR,CHIP 0 1/16W (1608)
R1916	1-216-864-11	s	RESISTOR,CHIP 0 1/16W (1608)
R1920	1-218-740-11	s	RESISTOR,CHIP 100K 1/16W(1608)
R1923	1-218-668-11	s	RESISTOR,CHIP 100 1/16W (1608)
R1924	1-218-740-11	s	RESISTOR,CHIP 100K 1/16W(1608)
R1925	1-218-740-11	s	RESISTOR,CHIP 100K 1/16W(1608)
RB1801	1-239-309-11	s	RESISTOR ARRAY,CHIP 100K
RB1802	1-239-412-11	s	NETWORK, RESISTOR 100 (1608)
RB1803	1-239-412-11	s	NETWORK, RESISTOR 100 (1608)
RB1808	1-239-412-11	s	NETWORK, RESISTOR 100 (1608)

(DM-114 BOARD)

Ref. No. or Q'ty	Part No.	SP	Description
RB1809	1-239-412-11	s	NETWORK, RESISTOR 100 (1608)
RB1810	1-239-412-11	s	NETWORK, RESISTOR 100 (1608)
RB1811	1-239-412-11	s	NETWORK, RESISTOR 100 (1608)
RV101	1-237-033-11	s	RESISTOR,ADJ,CERMET 1K
RV102	1-237-033-11	s	RESISTOR,ADJ,CERMET 1K
RV104	1-237-033-11	s	RESISTOR,ADJ,CERMET 1K
RV105	1-237-037-11	s	RESISTOR,ADJ,CERMET 20K
RV106	1-237-037-11	s	RESISTOR,ADJ,CERMET 20K
RV107	1-237-037-11	s	RESISTOR,ADJ,CERMET 20K
RV108	1-237-037-11	s	RESISTOR,ADJ,CERMET 20K
RV109	1-237-032-11	s	RESISTOR,ADJ,CERMET 500
RV110	1-237-031-11	s	RESISTOR,ADJ,CERMET 200
RV111	1-237-034-11	s	RESISTOR,ADJ,CERMET 2K
RV112	1-237-034-11	s	RESISTOR,ADJ,CERMET 2K
RV113	1-237-037-11	s	RESISTOR,ADJ,CERMET 20K
RV301	1-237-033-11	s	RESISTOR,ADJ,CERMET 1K
RV302	1-237-033-11	s	RESISTOR,ADJ,CERMET 1K
RV303	1-237-033-11	s	RESISTOR,ADJ,CERMET 1K
RV304	1-237-033-11	s	RESISTOR,ADJ,CERMET 1K
RV305	1-237-037-11	s	RESISTOR,ADJ,CERMET 20K
RV306	1-237-037-11	s	RESISTOR,ADJ,CERMET 20K
RV307	1-237-037-11	s	RESISTOR,ADJ,CERMET 20K
RV308	1-237-037-11	s	RESISTOR,ADJ,CERMET 20K
RV309	1-237-031-11	s	RESISTOR,ADJ,CERMET 200
RV310	1-237-031-11	s	RESISTOR,ADJ,CERMET 200
RV311	1-237-034-11	s	RESISTOR,ADJ,CERMET 2K
RV312	1 237 034 11	s	RESISTOR,ADJ,CERMET 2K
RV313	1-237-037-11	s	RESISTOR,ADJ,CERMET 20K
RV501	1-237-036-11	s	RESISTOR,ADJ,CERMET 10K
RV502	1-237-036-11	s	RESISTOR,ADJ,CERMET 10K
RV503	1-237-033-11	s	RESISTOR,ADJ,CERMET 1K
RV504	1-237-033-11	s	RESISTOR,ADJ,CERMET 1K
RV505	1-237-034-11	s	RESISTOR,ADJ,CERMET 2K
RV506	1-237-036-11	s	RESISTOR,ADJ,CERMET 10K
RV701	1-237-036-11	s	RESISTOR,ADJ,CERMET 10K
RV702	1-237-036-11	s	RESISTOR,ADJ,CERMET 10K
RV704	1-237-033-11	s	RESISTOR,ADJ,CERMET 1K
RV1101	1-237-032-11	s	RESISTOR,ADJ,CERMET 500
RV1201	1-237-032-11	s	RESISTOR,ADJ,CERMET 500
RV1301	1-237-038-11	s	RESISTOR,ADJ,CERMET 50K
RV1401	1-237-036-11	s	RESISTOR,ADJ,CERMET 10K
RV1402	1-237-034-11	s	RESISTOR,ADJ,CERMET 2K
RV1410	1-237-035-11	s	RESISTOR,ADJ,CERMET 5K
RV1411	1-237-035-11	s	RESISTOR,ADJ,CERMET 5K
RV1501	1-237-038-11	s	RESISTOR,ADJ,CERMET 50K
RV1601	1-237-035-11	s	RESISTOR,ADJ,CERMET 5K
RV1602	1-237-036-11	s	RESISTOR,ADJ,CERMET 10K
RV1603	1-237-036-11	s	RESISTOR,ADJ,CERMET 10K
RV1604	1-237-036-11	s	RESISTOR,ADJ,CERMET 10K
RV1605	1-237-034-11	s	RESISTOR,ADJ,CERMET 2K
RV1606	1-237-033-11	s	RESISTOR,ADJ,CERMET 1K
RV1801	1-237-037-11	s	RESISTOR,ADJ,CERMET 20K
S101	1-571-275-31	s	SWITCH, SLIDE (1-1-2)
S301	1-571-275-31	s	SWITCH, SLIDE (1-1-2)
S501	1-571-275-31	s	SWITCH, SLIDE (1-1-2)
S901	1-692-270-41	s	SWITCH, SLIDE
S1701	1-692-271-31	s	SWITCH, SLIDE
S1801	1-692-270-41	s	SWITCH, SLIDE

(DM-114 BOARD)

Ref. No. or Q'ty	Part No.	SP	Description
X301	1-579-989-11	s	VIBRATOR, CERAMIC
X302	1-579-986-21	s	VIBRATOR, CERAMIC
X901	1-767-717-11	s	VIBRATOR, CRYSTAL
X1801	1-767-717-11	s	VIBRATOR, CRYSTAL

DM-114P BOARD

Ref. No. or Q'ty	Part No.	SP	Description
1pc	A-8316-716-A	o	MOUNTED CIRCUIT BOARD, DM-114P
2pcs	3-729-061-01	s	SCREW (M2X4.5) (TYPE 1)(STEEL)
6pcs	7-682-902-11	s	SCREW +PWH 2.6X5(EP-FE/ZN/CM2)
C101	1-164-315-11	s	CAPACITOR,CERAMIC 470PF/50V CH
C102	1-164-227-11	s	CAPACITOR,CERAMIC 0.022MF/25V
C103	1-164-227-11	s	CAPACITOR,CERAMIC 0.022MF/25V
C104	1-115-416-11	s	CAPACITOR,CERAMIC 1000PF/25V
C107	1-164-227-11	s	CAPACITOR,CERAMIC 0.022MF/25V
C108	1-162-919-11	s	CAPACITOR,CERAMIC 22PF/50V CH
C109	1-164-227-11	s	CAPACITOR,CERAMIC 0.022MF/25V
C110	1-107-826-11	s	CAPACITOR,CHIP CERAMIC 0.1MF
C111	1-107-826-11	s	CAPACITOR,CHIP CERAMIC 0.1MF
C112	1-164-227-11	s	CAPACITOR,CERAMIC 0.022MF/25V
C113	1-164-380-11	s	CAPACITOR,CERAMIC 51PF CH (M-)
C114	1-164-227-11	s	CAPACITOR,CERAMIC 0.022MF/25V
C115	1-164-227-11	s	CAPACITOR,CERAMIC 0.022MF/25V
C116	1-162-924-11	s	CAPACITOR,CERAMIC 56PF/50V CH
C117	1-164-315-11	s	CAPACITOR,CERAMIC 470PF/50V CH
C118	1-164-227-11	s	CAPACITOR,CERAMIC 0.022MF/25V
C119	1-107-826-11	s	CAPACITOR,CHIP CERAMIC 0.1MF
C120	1-164-227-11	s	CAPACITOR,CERAMIC 0.022MF/25V
C121	1-164-227-11	s	CAPACITOR,CERAMIC 0.022MF/25V
C122	1-164-227-11	s	CAPACITOR,CERAMIC 0.022MF/25V
C123	1-164-238-11	s	CAPACITOR,CERAMIC 36PF/50V CH
C124	1-162-920-11	s	CAPACITOR,CERAMIC 27PF/50V CH
C125	1-164-227-11	s	CAPACITOR,CERAMIC 0.022MF/25V
C126	1 162 925 11	s	CAPACITOR,CERAMIC 68PF/50V CH
C127	1-162-926-11	s	CAPACITOR,CERAMIC 82PF/50V CH
C128	1-164-238-11	s	CAPACITOR,CERAMIC 36PF/50V CH
C129	1-162-920-11	s	CAPACITOR,CERAMIC 27PF/50V CH
C130	1-164-227-11	s	CAPACITOR,CERAMIC 0.022MF/25V
C131	1-164-227-11	s	CAPACITOR,CERAMIC 0.022MF/25V
C132	1-164-227-11	s	CAPACITOR,CERAMIC 0.022MF/25V
C133	1-164-227-11	s	CAPACITOR,CERAMIC 0.022MF/25V
C134	1-164-227-11	s	CAPACITOR,CERAMIC 0.022MF/25V
C135	1-162-923-11	s	CAPACITOR,CERAMIC 47PF/50V CH
C136	1-164-380-11	s	CAPACITOR,CERAMIC 51PF CH (M-)
C137	1-162-928-11	s	CAPACITOR,CERAMIC 120PF/50V CH
C138	1-162-917-11	s	CAPACITOR,CERAMIC 15PF/50V CH
C139	1-164-227-11	s	CAPACITOR,CERAMIC 0.022MF/25V
C140	1-164-227-11	s	CAPACITOR,CERAMIC 0.022MF/25V
C141	1-164-227-11	s	CAPACITOR,CERAMIC 0.022MF/25V
C142	1-164-227-11	s	CAPACITOR,CERAMIC 0.022MF/25V
C143	1-164-378-11	s	CAPACITOR CERAMIC 30PF/50V CH
C144	1-164-379-11	s	CAPACITOR,CERAMIC 43PF/50V CH
C145	1-164-227-11	s	CAPACITOR,CERAMIC 0.022MF/25V
C146	1-164-227-11	s	CAPACITOR,CERAMIC 0.022MF/25V
C147	1-107-826-11	s	CAPACITOR,CHIP CERAMIC 0.1MF
C148	1-107-826-11	s	CAPACITOR,CHIP CERAMIC 0.1MF
C149	1-107-826-11	s	CAPACITOR,CHIP CERAMIC 0.1MF
C150	1-104-608-11	s	CAPACITOR,ELECT 33MF/6.3V
C151	1-107-826-11	s	CAPACITOR,CHIP CERAMIC 0.1MF
C152	1-107-826-11	s	CAPACITOR,CHIP CERAMIC 0.1MF
C153	1-107-826-11	s	CAPACITOR,CHIP CERAMIC 0.1MF
C154	1-104-608-11	s	CAPACITOR,ELECT 33MF/6.3V
C155	1-164-227-11	s	CAPACITOR,CERAMIC 0.022MF/25V
C156	1-164-227-11	s	CAPACITOR,CERAMIC 0.022MF/25V
C157	1-107-826-11	s	CAPACITOR,CHIP CERAMIC 0.1MF

(DM-114P BOARD)

Ref. No. or Q'ty	Part No.	SP	Description
C158	1-107-826-11	s	CAPACITOR,CHIP CERAMIC 0.1MF
C159	1-107-826-11	s	CAPACITOR,CHIP CERAMIC 0.1MF
C160	1-164-315-11	s	CAPACITOR,CERAMIC 470PF/50V CH
C161	1-104-608-11	s	CAPACITOR,ELECT 33MF/6.3V
C162	1-164-315-11	s	CAPACITOR,CERAMIC 470PF/50V CH
C163	1-164-227-11	s	CAPACITOR,CERAMIC 0.022MF/25V
C164	1-164-227-11	s	CAPACITOR,CERAMIC 0.022MF/25V
C165	1-107-826-11	s	CAPACITOR,CHIP CERAMIC 0.1MF
C166	1-164-227-11	s	CAPACITOR,CERAMIC 0.022MF/25V
C167	1-164-227-11	s	CAPACITOR,CERAMIC 0.022MF/25V
C168	1-162-926-11	s	CAPACITOR,CERAMIC 82PF/50V CH
C169	1-164-217-11	s	CAPACITOR,CERAMIC 150PF/50V CH
C170	1-164-227-11	s	CAPACITOR,CERAMIC 0.022MF/25V
C171	1-164-227-11	s	CAPACITOR,CERAMIC 0.022MF/25V
C172	1-164-227-11	s	CAPACITOR,CERAMIC 0.022MF/25V
C173	1-164-227-11	s	CAPACITOR,CERAMIC 0.022MF/25V
C174	1-164-227-11	s	CAPACITOR,CERAMIC 0.022MF/25V
C175	1-107-826-11	s	CAPACITOR,CHIP CERAMIC 0.1MF
C176	1-164-227-11	s	CAPACITOR,CERAMIC 0.022MF/25V
C177	1-164-227-11	s	CAPACITOR,CERAMIC 0.022MF/25V
C178	1-164-227-11	s	CAPACITOR,CERAMIC 0.022MF/25V
C179	1-126-391-11	s	CAPACITOR ELECT 47MF/6.3V(105)
C180	1-164-227-11	s	CAPACITOR,CERAMIC 0.022MF/25V
C181	1-107-826-11	s	CAPACITOR,CHIP CERAMIC 0.1MF
C182	1-162-910-11	s	CAPACITOR,CERAMIC 5PF/50V 1608
C183	1-162-910-11	s	CAPACITOR,CERAMIC 5PF/50V 1608
C184	1 104 608 11	s	CAPACITOR,ELECT 33MF/6.3V
C185	1-126-401-11	s	CAPACITOR,ELECT 1MF/50V(CHIP)
C186	1-126-401-11	s	CAPACITOR,ELECT 1MF/50V(CHIP)
C187	1-107-826-11	s	CAPACITOR,CHIP CERAMIC 0.1MF
C188	1-107-826-11	s	CAPACITOR,CHIP CERAMIC 0.1MF
C190	1-115-416-11	s	CAPACITOR,CERAMIC 1000PF/25V
C191	1-126-391-11	s	CAPACITOR ELECT 47MF/6.3V(105)
C192	1-107-826-11	s	CAPACITOR,CHIP CERAMIC 0.1MF
C193	1-162-913-11	s	CAPACITOR,CHIP CERAMIC 8PF/50V
C194	1-164-227-11	s	CAPACITOR,CERAMIC 0.022MF/25V
C195	1-162-919-11	s	CAPACITOR,CERAMIC 22PF/50V CH
C196	1-126-401-11	s	CAPACITOR,ELECT 1MF/50V(CHIP)
C197	1-107-826-11	s	CAPACITOR,CHIP CERAMIC 0.1MF
C198	1-162-959-11	s	CAPACITOR,CERAMIC 330PF/50V SL
C199	1-107-826-11	s	CAPACITOR,CHIP CERAMIC 0.1MF
C200	1-162-919-11	s	CAPACITOR,CERAMIC 22PF/50V CH
C201	1-107-826-11	s	CAPACITOR,CHIP CERAMIC 0.1MF
C203	1-107-826-11	s	CAPACITOR,CHIP CERAMIC 0.1MF
C204	1-107-826-11	s	CAPACITOR,CHIP CERAMIC 0.1MF
C301	1-164-227-11	s	CAPACITOR,CERAMIC 0.022MF/25V
C302	1-164-227-11	s	CAPACITOR,CERAMIC 0.022MF/25V
C303	1-164-315-11	s	CAPACITOR,CERAMIC 470PF/50V CH
C304	1-162-919-11	s	CAPACITOR,CERAMIC 22PF/50V CH
C305	1-162-921-11	s	CAPACITOR,CERAMIC 33PF/50V CH
C306	1-162-919-11	s	CAPACITOR,CERAMIC 22PF/50V CH
C307	1-162-921-11	s	CAPACITOR,CERAMIC 33PF/50V CH
C308	1-115-416-11	s	CAPACITOR,CERAMIC 1000PF/25V
C309	1-162-918-11	s	CAPACITOR,CERAMIC 18PF/50V CH
C310	1-104-608-11	s	CAPACITOR,ELECT 33MF/6.3V
C311	1-107-826-11	s	CAPACITOR,CHIP CERAMIC 0.1MF
C312	1-164-227-11	s	CAPACITOR,CERAMIC 0.022MF/25V
C313	1-164-227-11	s	CAPACITOR,CERAMIC 0.022MF/25V
C314	1-164-315-11	s	CAPACITOR,CERAMIC 470PF/50V CH

http://getMANUAL.com

(DM-114P BOARD)

Ref. No. or Q'ty	Part No.	SP	Description
C315	1-164-227-11	s	CAPACITOR,CERAMIC 0.022MF/25V
C316	1-164-227-11	s	CAPACITOR,CERAMIC 0.022MF/25V
C317	1-162-922-11	s	CAPACITOR,CERAMIC 39PF/50V CH
C318	1-164-380-11	s	CAPACITOR,CERAMIC 51PF CH (M-)
C319	1-164-227-11	s	CAPACITOR,CERAMIC 0.022MF/25V
C320	1-162-926-11	s	CAPACITOR,CERAMIC 82PF/50V CH
C321	1-162-927-11	s	CAPACITOR,CERAMIC 100PF/50V CH
C322	1-104-608-11	s	CAPACITOR,ELECT 33MF/6.3V
C323	1-162-922-11	s	CAPACITOR,CERAMIC 39PF/50V CH
C324	1-164-380-11	s	CAPACITOR,CERAMIC 51PF CH (M-)
C325	1-107-826-11	s	CAPACITOR,CHIP CERAMIC 0.1MF
C326	1-164-217-11	s	CAPACITOR,CERAMIC 150PF/50V CH
C327	1-162-910-11	s	CAPACITOR,CERAMIC 5PF/50V 1608
C328	1-164-315-11	s	CAPACITOR,CERAMIC 470PF/50V CH
C329	1-164-227-11	s	CAPACITOR,CERAMIC 0.022MF/25V
C330	1-164-227-11	s	CAPACITOR,CERAMIC 0.022MF/25V
C331	1-164-227-11	s	CAPACITOR,CERAMIC 0.022MF/25V
C332	1-164-227-11	s	CAPACITOR,CERAMIC 0.022MF/25V
C333	1-162-927-11	s	CAPACITOR,CERAMIC 100PF/50V CH
C334	1-164-380-11	s	CAPACITOR,CERAMIC 51PF CH (M-)
C335	1-164-227-11	s	CAPACITOR,CERAMIC 0.022MF/25V
C336	1-164-227-11	s	CAPACITOR,CERAMIC 0.022MF/25V
C337	1-164-227-11	s	CAPACITOR,CERAMIC 0.022MF/25V
C338	1-164-227-11	s	CAPACITOR,CERAMIC 0.022MF/25V
C339	1-104-608-11	s	CAPACITOR,ELECT 33MF/6.3V
C340	1-162-975-11	s	CAPACITOR,CERAMIC 24PF/50V CH
C341	1-164-380-11	s	CAPACITOR,CERAMIC 51PF CH (M-)
C342	1-107-826-11	s	CAPACITOR,CHIP CERAMIC 0.1MF
C343	1-107-826-11	s	CAPACITOR,CHIP CERAMIC 0.1MF
C344	1-107-826-11	s	CAPACITOR,CHIP CERAMIC 0.1MF
C345	1-164-227-11	s	CAPACITOR,CERAMIC 0.022MF/25V
C346	1-164-227-11	s	CAPACITOR,CERAMIC 0.022MF/25V
C347	1-104-608-11	s	CAPACITOR,ELECT 33MF/6.3V
C348	1-107-826-11	s	CAPACITOR,CHIP CERAMIC 0.1MF
C349	1-107-826-11	s	CAPACITOR,CHIP CERAMIC 0.1MF
C350	1-164-227-11	s	CAPACITOR,CERAMIC 0.022MF/25V
C351	1-164-227-11	s	CAPACITOR,CERAMIC 0.022MF/25V
C352	1-164-315-11	s	CAPACITOR,CERAMIC 470PF/50V CH
C353	1-164-315-11	s	CAPACITOR,CERAMIC 470PF/50V CH
C354	1-164-227-11	s	CAPACITOR,CERAMIC 0.022MF/25V
C355	1-164-227-11	s	CAPACITOR,CERAMIC 0.022MF/25V
C356	1-164-227-11	s	CAPACITOR,CERAMIC 0.022MF/25V
C357	1-164-227-11	s	CAPACITOR,CERAMIC 0.022MF/25V
C358	1-162-927-11	s	CAPACITOR,CERAMIC 100PF/50V CH
C359	1-164-385-11	s	CAPACITOR,CERAMIC 160PF/50V
C360	1-164-227-11	s	CAPACITOR,CERAMIC 0.022MF/25V
C361	1-164-227-11	s	CAPACITOR,CERAMIC 0.022MF/25V
C362	1-164-227-11	s	CAPACITOR,CERAMIC 0.022MF/25V
C363	1-164-227-11	s	CAPACITOR,CERAMIC 0.022MF/25V
C364	1-164-227-11	s	CAPACITOR,CERAMIC 0.022MF/25V
C365	1-107-826-11	s	CAPACITOR,CHIP CERAMIC 0.1MF
C366	1-164-227-11	s	CAPACITOR,CERAMIC 0.022MF/25V
C367	1-164-227-11	s	CAPACITOR,CERAMIC 0.022MF/25V
C368	1-164-227-11	s	CAPACITOR,CERAMIC 0.022MF/25V
C369	1-162-913-11	s	CAPACITOR,CHIP CERAMIC 8PF/50V
C370	1-126-391-11	s	CAPACITOR ELECT 47MF/6.3V(105)
C371	1-162-913-11	s	CAPACITOR,CHIP CERAMIC 8PF/50V
C372	1-104-608-11	s	CAPACITOR,ELECT 33MF/6.3V
C373	1-107-826-11	s	CAPACITOR,CHIP CERAMIC 0.1MF

(DM-114P BOARD)

Ref. No. or Q'ty	Part No.	SP	Description
C374	1-107-826-11	s	CAPACITOR,CHIP CERAMIC 0.1MF
C375	1-107-826-11	s	CAPACITOR,CHIP CERAMIC 0.1MF
C377	1-126-401-11	s	CAPACITOR,ELECT 1MF/50V(CHIP)
C378	1-126-401-11	s	CAPACITOR,ELECT 1MF/50V(CHIP)
C379	1-115-416-11	s	CAPACITOR,CERAMIC 1000PF/25V
C380	1-162-913-11	s	CAPACITOR,CHIP CERAMIC 8PF/50V
C381	1-126-391-11	s	CAPACITOR ELECT 47MF/6.3V(105)
C382	1-107-826-11	s	CAPACITOR,CHIP CERAMIC 0.1MF
C383	1-162-919-11	s	CAPACITOR,CERAMIC 22PF/50V CH
C384	1-164-227-11	s	CAPACITOR,CERAMIC 0.022MF/25V
C385	1-126-401-11	s	CAPACITOR,ELECT 1MF/50V(CHIP)
C386	1-162-959-11	s	CAPACITOR,CERAMIC 330PF/50V SL
C387	1-162-919-11	s	CAPACITOR,CERAMIC 22PF/50V CH
C388	1-107-826-11	s	CAPACITOR,CHIP CERAMIC 0.1MF
C389	1-107-826-11	s	CAPACITOR,CHIP CERAMIC 0.1MF
C501	1-164-227-11	s	CAPACITOR,CERAMIC 0.022MF/25V
C502	1-135-177-21	s	CAPACITOR TANTALUM 1MF/25V
C503	1-104-608-11	s	CAPACITOR,ELECT 33MF/6.3V
C505	1-164-227-11	s	CAPACITOR,CERAMIC 0.022MF/25V
C506	1-164-227-11	s	CAPACITOR,CERAMIC 0.022MF/25V
C507	1-164-227-11	s	CAPACITOR,CERAMIC 0.022MF/25V
C508	1-164-227-11	s	CAPACITOR,CERAMIC 0.022MF/25V
C509	1-164-227-11	s	CAPACITOR,CERAMIC 0.022MF/25V
C510	1-164-227-11	s	CAPACITOR,CERAMIC 0.022MF/25V
C511	1-164-227-11	s	CAPACITOR,CERAMIC 0.022MF/25V
C512	1-164-227-11	s	CAPACITOR,CERAMIC 0.022MF/25V
C513	1-107-826-11	s	CAPACITOR,CHIP CERAMIC 0.1MF
C514	1-117-373-11	s	CAPACITOR, (SMD) 150MF/6.3V
C515	1-164-227-11	s	CAPACITOR,CERAMIC 0.022MF/25V
C516	1-107-826-11	s	CAPACITOR,CHIP CERAMIC 0.1MF
C517	1-164-227-11	s	CAPACITOR,CERAMIC 0.022MF/25V
C518	1-126-394-11	s	CAPACITOR ELECT 10MF/16V(CHIP)
C519	1-126-391-11	s	CAPACITOR ELECT 47MF/6.3V(105)
C520	1-126-392-11	s	CAPACITOR,CHIP ELECT100MF/6.3V
C521	1-104-922-21	s	CAPACITOR,MINITURE MOLDMICA
C522	1-107-826-11	s	CAPACITOR,CHIP CERAMIC 0.1MF
C523	1-126-392-11	s	CAPACITOR,CHIP ELECT100MF/6.3V
C524	1-126-391-11	s	CAPACITOR ELECT 47MF/6.3V(105)
C525	1-126-398-11	s	CAPACITOR ELECT 4.7MF/35V(CHIP
C526	1-162-908-11	s	CAPACITOR,CERAMIC 3PF/50V 1608
C527	1-162-912-11	s	CAPACITOR,CERAMIC 7PF/50V 1608
C528	1-162-909-11	s	CAPACITOR,CERAMIC 4.0PF/50V CH
C529	1-164-238-11	s	CAPACITOR,CERAMIC 36PF/50V CH
C530	1-164-379-11	s	CAPACITOR,CERAMIC 43PF/50V CH
C531	1-126-392-11	s	CAPACITOR,CHIP ELECT100MF/6.3V
C532	1-107-826-11	s	CAPACITOR,CHIP CERAMIC 0.1MF
C533	1-126-390-11	s	CAPACITOR ELECT 22MF/6.3V(105)
C534	1-135-180-21	s	CAPACITOR TANTALUM 3.3MF/10V
C535	1-107-826-11	s	CAPACITOR,CHIP CERAMIC 0.1MF
C536	1-107-826-11	s	CAPACITOR,CHIP CERAMIC 0.1MF
C537	1-107-826-11	s	CAPACITOR,CHIP CERAMIC 0.1MF
C538	1-117-373-11	s	CAPACITOR, (SMD) 150MF/6.3V
C539	1-135-177-21	s	CAPACITOR TANTALUM 1MF/25V
C540	1-107-826-11	s	CAPACITOR,CHIP CERAMIC 0.1MF
C541	1-126-392-11	s	CAPACITOR,CHIP ELECT100MF/6.3V
C542	1-126-392-11	s	CAPACITOR,CHIP ELECT100MF/6.3V
C543	1-107-826-11	s	CAPACITOR,CHIP CERAMIC 0.1MF
C544	1-107-826-11	s	CAPACITOR,CHIP CERAMIC 0.1MF
C545	1-126-392-11	s	CAPACITOR,CHIP ELECT100MF/6.3V

(DM-114P BOARD)

Ref. No. or Q'ty	Part No.	SP	Description
C546	1-107-826-11	s	CAPACITOR,CHIP CERAMIC 0.1MF
C547	1-107-826-11	s	CAPACITOR,CHIP CERAMIC 0.1MF
C548	1-107-826-11	s	CAPACITOR,CHIP CERAMIC 0.1MF
C549	1-107-826-11	s	CAPACITOR,CHIP CERAMIC 0.1MF
C550	1-107-826-11	s	CAPACITOR,CHIP CERAMIC 0.1MF
C551	1-107-826-11	s	CAPACITOR,CHIP CERAMIC 0.1MF
C552	1-107-826-11	s	CAPACITOR,CHIP CERAMIC 0.1MF
C553	1-107-826-11	s	CAPACITOR,CHIP CERAMIC 0.1MF
C554	1-164-227-11	s	CAPACITOR,CERAMIC 0.022MF/25V
C555	1-164-227-11	s	CAPACITOR,CERAMIC 0.022MF/25V
C556	1-107-826-11	s	CAPACITOR,CHIP CERAMIC 0.1MF
C557	1-126-396-11	s	CAPACITOR ELECT 47MF/16V(CHIP)
C558	1-107-826-11	s	CAPACITOR,CHIP CERAMIC 0.1MF
C559	1-164-160-11	s	CAPACITOR,CERAMIC 20PF/50V CH
C560	1-107-826-11	s	CAPACITOR,CHIP CERAMIC 0.1MF
C561	1-164-227-11	s	CAPACITOR,CERAMIC 0.022MF/25V
C562	1-117-373-11	s	CAPACITOR, (SMD) 150MF/6.3V
C563	1-117-373-11	s	CAPACITOR, (SMD) 150MF/6.3V
C564	1-107-826-11	s	CAPACITOR,CHIP CERAMIC 0.1MF
C565	1-162-920-11	s	CAPACITOR,CERAMIC 27PF/50V CH
C566	1-135-070-00	s	CAPACITOR TANTALUM 0.1MF/35V
C567	1-164-227-11	s	CAPACITOR,CERAMIC 0.022MF/25V
C568	1-162-920-11	s	CAPACITOR,CERAMIC 27PF/50V CH
C569	1-107-826-11	s	CAPACITOR,CHIP CERAMIC 0.1MF
C570	1-107-826-11	s	CAPACITOR,CHIP CERAMIC 0.1MF
C571	1-162-915-11	s	CAPACITOR,CERAMIC 10PF/50V CH
C701	1 107 826 11	s	CAPACITOR,CHIP CERAMIC 0.1MF
C702	1-164-227-11	s	CAPACITOR,CERAMIC 0.022MF/25V
C703	1-117-373-11	s	CAPACITOR, (SMD) 150MF/6.3V
C704	1-164-227-11	s	CAPACITOR,CERAMIC 0.022MF/25V
C705	1-164-227-11	s	CAPACITOR,CERAMIC 0.022MF/25V
C706	1-126-391-11	s	CAPACITOR ELECT 47MF/6.3V(105)
C707	1-126-392-11	s	CAPACITOR,CHIP ELECT100MF/6.3V
C708	1-104-922-21	s	CAPACITOR,MINITURE MOLDMICA
C709	1-126-398-11	s	CAPACITOR ELECT 4.7MF/35V(CHIP
C710	1-126-391-11	s	CAPACITOR ELECT 47MF/6.3V(105)
C711	1-107-826-11	s	CAPACITOR,CHIP CERAMIC 0.1MF
C712	1-126-392-11	s	CAPACITOR,CHIP ELECT100MF/6.3V
C713	1-164-227-11	s	CAPACITOR,CERAMIC 0.022MF/25V
C714	1-126-392-11	s	CAPACITOR,CHIP ELECT100MF/6.3V
C715	1-162-927-11	s	CAPACITOR,CERAMIC 100PF/50V CH
C716	1-126-392-11	s	CAPACITOR,CHIP ELECT100MF/6.3V
C717	1-107-826-11	s	CAPACITOR,CHIP CERAMIC 0.1MF
C718	1-126-390-11	s	CAPACITOR ELECT 22MF/6.3V(105)
C719	1-135-180-21	s	CAPACITOR TANTALUM 3.3MF/10V
C720	1-107-826-11	s	CAPACITOR,CHIP CERAMIC 0.1MF
C721	1-117-373-11	s	CAPACITOR, (SMD) 150MF/6.3V
C722	1-135-177-21	s	CAPACITOR TANTALUM 1MF/25V
C723	1-107-826-11	s	CAPACITOR,CHIP CERAMIC 0.1MF
C724	1-107-826-11	s	CAPACITOR,CHIP CERAMIC 0.1MF
C725	1-107-826-11	s	CAPACITOR,CHIP CERAMIC 0.1MF
C726	1-126-392-11	s	CAPACITOR,CHIP ELECT100MF/6.3V
C727	1-164-227-11	s	CAPACITOR,CERAMIC 0.022MF/25V
C728	1-164-227-11	s	CAPACITOR,CERAMIC 0.022MF/25V
C729	1-107-826-11	s	CAPACITOR,CHIP CERAMIC 0.1MF
C730	1-126-392-11	s	CAPACITOR,CHIP ELECT100MF/6.3V
C731	1-107-826-11	s	CAPACITOR,CHIP CERAMIC 0.1MF
C732	1-107-826-11	s	CAPACITOR,CHIP CERAMIC 0.1MF
C733	1-107-826-11	s	CAPACITOR,CHIP CERAMIC 0.1MF

(DM-114P BOARD)

Ref. No. or Q'ty	Part No.	SP	Description
C734	1-126-396-11	s	CAPACITOR ELECT 47MF/16V(CHIP)
C735	1-107-826-11	s	CAPACITOR,CHIP CERAMIC 0.1MF
C736	1-164-160-11	s	CAPACITOR,CERAMIC 20PF/50V CH
C737	1-107-826-11	s	CAPACITOR,CHIP CERAMIC 0.1MF
C738	1-164-227-11	s	CAPACITOR,CERAMIC 0.022MF/25V
C739	1-117-373-11	s	CAPACITOR, (SMD) 150MF/6.3V
C740	1-117-373-11	s	CAPACITOR, (SMD) 150MF/6.3V
C741	1-107-826-11	s	CAPACITOR,CHIP CERAMIC 0.1MF
C742	1-162-920-11	s	CAPACITOR,CERAMIC 27PF/50V CH
C743	1-135-070-00	s	CAPACITOR TANTALUM 0.1MF/35V
C744	1-164-227-11	s	CAPACITOR,CERAMIC 0.022MF/25V
C745	1-162-920-11	s	CAPACITOR,CERAMIC 27PF/50V CH
C746	1-107-826-11	s	CAPACITOR,CHIP CERAMIC 0.1MF
C747	1-107-826-11	s	CAPACITOR,CHIP CERAMIC 0.1MF
C901	1-162-919-11	s	CAPACITOR,CERAMIC 22PF/50V CH
C902	1-162-919-11	s	CAPACITOR,CERAMIC 22PF/50V CH
C903	1-126-392-11	s	CAPACITOR,CHIP ELECT100MF/6.3V
C904	1-164-227-11	s	CAPACITOR,CERAMIC 0.022MF/25V
C905	1-164-227-11	s	CAPACITOR,CERAMIC 0.022MF/25V
C906	1-164-227-11	s	CAPACITOR,CERAMIC 0.022MF/25V
C907	1-126-392-11	s	CAPACITOR,CHIP ELECT100MF/6.3V
C908	1-164-227-11	s	CAPACITOR,CERAMIC 0.022MF/25V
C909	1-162-919-11	s	CAPACITOR,CERAMIC 22PF/50V CH
C910	1-162-919-11	s	CAPACITOR,CERAMIC 22PF/50V CH
C911	1-126-392-11	s	CAPACITOR,CHIP ELECT100MF/6.3V
C912	1-126-392-11	s	CAPACITOR,CHIP ELECT100MF/6.3V
C913	1 164 227 11	s	CAPACITOR,CERAMIC 0.022MF/25V
C914	1-164-227-11	s	CAPACITOR,CERAMIC 0.022MF/25V
C915	1-126-392-11	s	CAPACITOR,CHIP ELECT100MF/6.3V
C916	1-164-227-11	s	CAPACITOR,CERAMIC 0.022MF/25V
C917	1-164-227-11	s	CAPACITOR,CERAMIC 0.022MF/25V
C918	1-164-227-11	s	CAPACITOR,CERAMIC 0.022MF/25V
C919	1-107-826-11	s	CAPACITOR,CHIP CERAMIC 0.1MF
C920	1-164-315-11	s	CAPACITOR,CERAMIC 470PF/50V CH
C921	1-107-826-11	s	CAPACITOR,CHIP CERAMIC 0.1MF
C922	1-126-394-11	s	CAPACITOR ELECT 10MF/16V(CHIP)
C923	1-126-394-11	s	CAPACITOR ELECT 10MF/16V(CHIP)
C924	1-107-826-11	s	CAPACITOR,CHIP CERAMIC 0.1MF
C925	1-107-826-11	s	CAPACITOR,CHIP CERAMIC 0.1MF
C926	1-107-826-11	s	CAPACITOR,CHIP CERAMIC 0.1MF
C927	1-164-227-11	s	CAPACITOR,CERAMIC 0.022MF/25V
C928	1-126-392-11	s	CAPACITOR,CHIP ELECT100MF/6.3V
C929	1-126-393-11	s	CAPACITOR ELECT 33MF/10V(CHIP)
C930	1-113-981-11	s	CAPACITOR TANTALUM 22MF/20V
C931	1-126-392-11	s	CAPACITOR,CHIP ELECT100MF/6.3V
C932	1-126-392-11	s	CAPACITOR,CHIP ELECT100MF/6.3V
C933	1-126-392-11	s	CAPACITOR,CHIP ELECT100MF/6.3V
C934	1-126-392-11	s	CAPACITOR,CHIP ELECT100MF/6.3V
C935	1-107-826-11	s	CAPACITOR,CHIP CERAMIC 0.1MF
C936	1-107-826-11	s	CAPACITOR,CHIP CERAMIC 0.1MF
C937	1-107-826-11	s	CAPACITOR,CHIP CERAMIC 0.1MF
C938	1-107-826-11	s	CAPACITOR,CHIP CERAMIC 0.1MF
C939	1-107-826-11	s	CAPACITOR,CHIP CERAMIC 0.1MF
C940	1-107-826-11	s	CAPACITOR,CHIP CERAMIC 0.1MF
C941	1-126-396-11	s	CAPACITOR ELECT 47MF/16V(CHIP)
C942	1-104-823-11	s	CAPACITOR,CHIP TANTAL 47MF/16V
C943	1-104-823-11	s	CAPACITOR,CHIP TANTAL 47MF/16V
C944	1-104-823-11	s	CAPACITOR,CHIP TANTAL 47MF/16V
C945	1-104-823-11	s	CAPACITOR,CHIP TANTAL 47MF/16V

(DM-114P BOARD)

Ref. No. or Q'ty	Part No.	SP	Description
C946	1-104-823-11	s	CAPACITOR,CHIP TANTAL 47MF/16V
C947	1-104-823-11	s	CAPACITOR,CHIP TANTAL 47MF/16V
C948	1-107-826-11	s	CAPACITOR,CHIP CERAMIC 0.1MF
C949	1-107-826-11	s	CAPACITOR,CHIP CERAMIC 0.1MF
C950	1-107-826-11	s	CAPACITOR,CHIP CERAMIC 0.1MF
C951	1-107-826-11	s	CAPACITOR,CHIP CERAMIC 0.1MF
C952	1-107-826-11	s	CAPACITOR,CHIP CERAMIC 0.1MF
C953	1-107-826-11	s	CAPACITOR,CHIP CERAMIC 0.1MF
C954	1-104-823-11	s	CAPACITOR,CHIP TANTAL 47MF/16V
C955	1-104-823-11	s	CAPACITOR,CHIP TANTAL 47MF/16V
C956	1-104-823-11	s	CAPACITOR,CHIP TANTAL 47MF/16V
C957	1-104-823-11	s	CAPACITOR,CHIP TANTAL 47MF/16V
C958	1-126-396-11	s	CAPACITOR ELECT 47MF/16V(CHIP)
C959	1-104-823-11	s	CAPACITOR,CHIP TANTAL 47MF/16V
C960	1-162-923-11	s	CAPACITOR,CERAMIC 47PF/50V CH
C961	1-162-923-11	s	CAPACITOR,CERAMIC 47PF/50V CH
C962	1-162-923-11	s	CAPACITOR,CERAMIC 47PF/50V CH
C963	1-162-923-11	s	CAPACITOR,CERAMIC 47PF/50V CH
C964	1-162-923-11	s	CAPACITOR,CERAMIC 47PF/50V CH
C965	1-162-923-11	s	CAPACITOR,CERAMIC 47PF/50V CH
C1101	1-164-227-11	s	CAPACITOR,CERAMIC 0.022MF/25V
C1102	1-164-227-11	s	CAPACITOR,CERAMIC 0.022MF/25V
C1103	1-164-227-11	s	CAPACITOR,CERAMIC 0.022MF/25V
C1105	1-162-927-11	s	CAPACITOR,CERAMIC 100PF/50V CH
C1106	1-164-227-11	s	CAPACITOR,CERAMIC 0.022MF/25V
C1107	1-126-391-11	s	CAPACITOR ELECT 47MF/6.3V(105)
C1108	1 135 070 00	s	CAPACITOR TANTALUM 0.1MF/35V
C1109	1-164-227-11	s	CAPACITOR,CERAMIC 0.022MF/25V
C1110	1-115-416-11	s	CAPACITOR,CERAMIC 1000PF/25V
C1111	1-164-227-11	s	CAPACITOR,CERAMIC 0.022MF/25V
C1112	1-107-826-11	s	CAPACITOR,CHIP CERAMIC 0.1MF
C1113	1-135-070-00	s	CAPACITOR TANTALUM 0.1MF/35V
C1114	1-164-227-11	s	CAPACITOR,CERAMIC 0.022MF/25V
C1115	1-164-227-11	s	CAPACITOR,CERAMIC 0.022MF/25V
C1116	1-126-394-11	s	CAPACITOR ELECT 10MF/16V(CHIP)
C1117	1-126-394-11	s	CAPACITOR ELECT 10MF/16V(CHIP)
C1118	1-104-852-11	s	CAPACITOR,TANTALUM 22MF/10V
C1119	1-135-177-21	s	CAPACITOR TANTALUM 1MF/25V
C1121	1-162-970-11	s	CAPACITOR CERAMIC 0.01MF/25V B
C1122	1-104-852-11	s	CAPACITOR,TANTALUM 22MF/10V
C1123	1-107-826-11	s	CAPACITOR,CHIP CERAMIC 0.1MF
C1125	1-162-928-11	s	CAPACITOR,CERAMIC 120PF/50V CH
C1126	1-164-227-11	s	CAPACITOR,CERAMIC 0.022MF/25V
C1128	1-162-915-11	s	CAPACITOR,CERAMIC 10PF/50V CH
C1129	1-117-372-11	s	CAP,ELECT (SMD) 100MF/10V
C1130	1-117-372-11	s	CAP,ELECT (SMD) 100MF/10V
C1131	1-117-373-11	s	CAPACITOR, (SMD) 150MF/6.3V
C1132	1-164-227-11	s	CAPACITOR,CERAMIC 0.022MF/25V
C1133	1-164-227-11	s	CAPACITOR,CERAMIC 0.022MF/25V
C1134	1-164-227-11	s	CAPACITOR,CERAMIC 0.022MF/25V
C1135	1-162-927-11	s	CAPACITOR,CERAMIC 100PF/50V CH
C1136	1-164-227-11	s	CAPACITOR,CERAMIC 0.022MF/25V
C1138	1-126-392-11	s	CAPACITOR,CHIP ELECT100MF/6.3V
C1139	1-126-392-11	s	CAPACITOR,CHIP ELECT100MF/6.3V
C1140	1-164-227-11	s	CAPACITOR,CERAMIC 0.022MF/25V
C1141	1-164-227-11	s	CAPACITOR,CERAMIC 0.022MF/25V
C1142	1-164-227-11	s	CAPACITOR,CERAMIC 0.022MF/25V
C1143	1-104-852-11	s	CAPACITOR,TANTALUM 22MF/10V
C1144	1-104-852-11	s	CAPACITOR,TANTALUM 22MF/10V

(DM-114P BOARD)

Ref. No. or Q'ty	Part No.	SP	Description
C1145	1-104-852-11	s	CAPACITOR,TANTALUM 22MF/10V
C1146	1-164-227-11	s	CAPACITOR,CERAMIC 0.022MF/25V
C1147	1-164-227-11	s	CAPACITOR,CERAMIC 0.022MF/25V
C1148	1-164-227-11	s	CAPACITOR,CERAMIC 0.022MF/25V
C1149	1-164-227-11	s	CAPACITOR,CERAMIC 0.022MF/25V
C1201	1-164-227-11	s	CAPACITOR,CERAMIC 0.022MF/25V
C1202	1-164-227-11	s	CAPACITOR,CERAMIC 0.022MF/25V
C1203	1-126-391-11	s	CAPACITOR ELECT 47MF/6.3V(105)
C1204	1-164-227-11	s	CAPACITOR,CERAMIC 0.022MF/25V
C1205	1-135-070-00	s	CAPACITOR TANTALUM 0.1MF/35V
C1206	1-164-227-11	s	CAPACITOR,CERAMIC 0.022MF/25V
C1207	1-115-416-11	s	CAPACITOR,CERAMIC 1000PF/25V
C1208	1-135-070-00	s	CAPACITOR TANTALUM 0.1MF/35V
C1209	1-107-826-11	s	CAPACITOR,CHIP CERAMIC 0.1MF
C1210	1-164-227-11	s	CAPACITOR,CERAMIC 0.022MF/25V
C1211	1-164-227-11	s	CAPACITOR,CERAMIC 0.022MF/25V
C1212	1-126-394-11	s	CAPACITOR ELECT 10MF/16V(CHIP)
C1213	1-126-394-11	s	CAPACITOR ELECT 10MF/16V(CHIP)
C1214	1-104-852-11	s	CAPACITOR,TANTALUM 22MF/10V
C1215	1-135-177-21	s	CAPACITOR TANTALUM 1MF/25V
C1217	1-162-970-11	s	CAPACITOR CERAMIC 0.01MF/25V B
C1218	1-107-826-11	s	CAPACITOR,CHIP CERAMIC 0.1MF
C1220	1-162-928-11	s	CAPACITOR,CERAMIC 120PF/50V CH
C1222	1-162-915-11	s	CAPACITOR,CERAMIC 10PF/50V CH
C1223	1-164-227-11	s	CAPACITOR,CERAMIC 0.022MF/25V
C1224	1-117-372-11	s	CAP,ELECT (SMD) 100MF/10V
C1225	1 117 372 11	s	CAP,ELECT (SMD) 100MF/10V
C1226	1-117-373-11	s	CAPACITOR, (SMD) 150MF/6.3V
C1227	1-164-227-11	s	CAPACITOR,CERAMIC 0.022MF/25V
C1228	1-164-227-11	s	CAPACITOR,CERAMIC 0.022MF/25V
C1229	1-164-227-11	s	CAPACITOR,CERAMIC 0.022MF/25V
C1230	1-164-217-11	s	CAPACITOR,CERAMIC 150PF/50V CH
C1232	1-164-227-11	s	CAPACITOR,CERAMIC 0.022MF/25V
C1233	1-126-392-11	s	CAPACITOR,CHIP ELECT100MF/6.3V
C1234	1-126-392-11	s	CAPACITOR,CHIP ELECT100MF/6.3V
C1235	1-164-227-11	s	CAPACITOR,CERAMIC 0.022MF/25V
C1236	1-164-227-11	s	CAPACITOR,CERAMIC 0.022MF/25V
C1237	1-164-227-11	s	CAPACITOR,CERAMIC 0.022MF/25V
C1301	1-104-608-11	s	CAPACITOR,ELECT 33MF/6.3V
C1302	1-104-608-11	s	CAPACITOR,ELECT 33MF/6.3V
C1303	1-107-826-11	s	CAPACITOR,CHIP CERAMIC 0.1MF
C1304	1-107-826-11	s	CAPACITOR,CHIP CERAMIC 0.1MF
C1305	1-162-917-11	s	CAPACITOR,CERAMIC 15PF/50V CH
C1306	1-164-227-11	s	CAPACITOR,CERAMIC 0.022MF/25V
C1307	1-104-608-11	s	CAPACITOR,ELECT 33MF/6.3V
C1308	1-164-227-11	s	CAPACITOR,CERAMIC 0.022MF/25V
C1309	1-107-826-11	s	CAPACITOR,CHIP CERAMIC 0.1MF
C1310	1-162-927-11	s	CAPACITOR,CERAMIC 100PF/50V CH
C1311	1-162-959-11	s	CAPACITOR,CERAMIC 330PF/50V SL
C1312	1-164-315-11	s	CAPACITOR,CERAMIC 470PF/50V CH
C1313	1-164-227-11	s	CAPACITOR,CERAMIC 0.022MF/25V
C1314	1-164-227-11	s	CAPACITOR,CERAMIC 0.022MF/25V
C1316	1-164-227-11	s	CAPACITOR,CERAMIC 0.022MF/25V
C1317	1-164-227-11	s	CAPACITOR,CERAMIC 0.022MF/25V
C1318	1-164-227-11	s	CAPACITOR,CERAMIC 0.022MF/25V
C1319	1-126-394-11	s	CAPACITOR ELECT 10MF/16V(CHIP)
C1320	1-164-227-11	s	CAPACITOR,CERAMIC 0.022MF/25V
C1321	1-164-227-11	s	CAPACITOR,CERAMIC 0.022MF/25V
C1322	1-104-608-11	s	CAPACITOR,ELECT 33MF/6.3V

(DM-114P BOARD)

Ref. No. or Q'ty	Part No.	SP	Description
C1323	1-107-826-11	s	CAPACITOR,CHIP CERAMIC 0.1MF
C1324	1-164-227-11	s	CAPACITOR,CERAMIC 0.022MF/25V
C1325	1-164-227-11	s	CAPACITOR,CERAMIC 0.022MF/25V
C1326	1-162-921-11	s	CAPACITOR,CERAMIC 33PF/50V CH
C1327	1-164-227-11	s	CAPACITOR,CERAMIC 0.022MF/25V
C1328	1-164-227-11	s	CAPACITOR,CERAMIC 0.022MF/25V
C1329	1-164-227-11	s	CAPACITOR,CERAMIC 0.022MF/25V
C1330	1-162-921-11	s	CAPACITOR,CERAMIC 33PF/50V CH
C1331	1-164-227-11	s	CAPACITOR,CERAMIC 0.022MF/25V
C1332	1-164-227-11	s	CAPACITOR,CERAMIC 0.022MF/25V
C1401	1-126-401-11	s	CAPACITOR,ELECT 1MF/50V(CHIP)
C1402	1-126-401-11	s	CAPACITOR,ELECT 1MF/50V(CHIP)
C1403	1-162-927-11	s	CAPACITOR,CERAMIC 100PF/50V CH
C1404	1-164-315-11	s	CAPACITOR,CERAMIC 470PF/50V CH
C1405	1-107-826-11	s	CAPACITOR,CHIP CERAMIC 0.1MF
C1406	1-164-227-11	s	CAPACITOR,CERAMIC 0.022MF/25V
C1407	1-115-416-11	s	CAPACITOR,CERAMIC 1000PF/25V
C1408	1-164-227-11	s	CAPACITOR,CERAMIC 0.022MF/25V
C1409	1-126-401-11	s	CAPACITOR,ELECT 1MF/50V(CHIP)
C1410	1-107-826-11	s	CAPACITOR,CHIP CERAMIC 0.1MF
C1411	1-107-826-11	s	CAPACITOR,CHIP CERAMIC 0.1MF
C1412	1-126-401-11	s	CAPACITOR,ELECT 1MF/50V(CHIP)
C1413	1-164-227-11	s	CAPACITOR,CERAMIC 0.022MF/25V
C1414	1-107-826-11	s	CAPACITOR,CHIP CERAMIC 0.1MF
C1415	1-107-826-11	s	CAPACITOR,CHIP CERAMIC 0.1MF
C1416	1-162-927-11	s	CAPACITOR,CERAMIC 100PF/50V CH
C1417	1 126 392 11	s	CAPACITOR,CHIP ELECT100MF/6.3V
C1418	1-164-227-11	s	CAPACITOR,CERAMIC 0.022MF/25V
C1419	1-164-227-11	s	CAPACITOR,CERAMIC 0.022MF/25V
C1420	1-162-923-11	s	CAPACITOR,CERAMIC 47PF/50V CH
C1421	1-164-227-11	s	CAPACITOR,CERAMIC 0.022MF/25V
C1422	1-164-227-11	s	CAPACITOR,CERAMIC 0.022MF/25V
C1423	1-164-227-11	s	CAPACITOR,CERAMIC 0.022MF/25V
C1424	1-126-396-11	s	CAPACITOR ELECT 47MF/16V(CHIP)
C1425	1-164-315-11	s	CAPACITOR,CERAMIC 470PF/50V CH
C1426	1-162-970-11	s	CAPACITOR CERAMIC 0.01MF/25V B
C1427	1-162-927-11	s	CAPACITOR,CERAMIC 100PF/50V CH
C1428	1-126-392-11	s	CAPACITOR,CHIP ELECT100MF/6.3V
C1429	1-164-227-11	s	CAPACITOR,CERAMIC 0.022MF/25V
C1430	1-164-227-11	s	CAPACITOR,CERAMIC 0.022MF/25V
C1431	1-164-227-11	s	CAPACITOR,CERAMIC 0.022MF/25V
C1432	1-162-927-11	s	CAPACITOR,CERAMIC 100PF/50V CH
C1433	1-162-927-11	s	CAPACITOR,CERAMIC 100PF/50V CH
C1434	1-164-227-11	s	CAPACITOR,CERAMIC 0.022MF/25V
C1435	1-162-928-11	s	CAPACITOR,CERAMIC 120PF/50V CH
C1436	1-164-227-11	s	CAPACITOR,CERAMIC 0.022MF/25V
C1437	1-162-927-11	s	CAPACITOR,CERAMIC 100PF/50V CH
C1438	1-164-227-11	s	CAPACITOR,CERAMIC 0.022MF/25V
C1439	1-164-227-11	s	CAPACITOR,CERAMIC 0.022MF/25V
C1440	1-107-826-11	s	CAPACITOR,CHIP CERAMIC 0.1MF
C1441	1-107-826-11	s	CAPACITOR,CHIP CERAMIC 0.1MF
C1442	1-126-392-11	s	CAPACITOR,CHIP ELECT100MF/6.3V
C1443	1-135-149-21	s	CAPACITOR TANTALUM 2.2MF/10V
C1444	1-135-146-21	s	CAPACITOR TANTALUM 0.68MF/25V
C1445	1-135-149-21	s	CAPACITOR TANTALUM 2.2MF/10V
C1446	1-162-927-11	s	CAPACITOR,CERAMIC 100PF/50V CH
C1447	1-135-146-21	s	CAPACITOR TANTALUM 0.68MF/25V
C1448	1-164-227-11	s	CAPACITOR,CERAMIC 0.022MF/25V
C1449	1-135-210-11	s	CAPACITOR TANTAL 4.7MF/10V

(DM-114P BOARD)

Ref. No. or Q'ty	Part No.	SP	Description
C1450	1-135-146-21	s	CAPACITOR TANTALUM 0.68MF/25V
C1451	1-135-210-11	s	CAPACITOR TANTAL 4.7MF/10V
C1452	1-135-146-21	s	CAPACITOR TANTALUM 0.68MF/25V
C1453	1-164-227-11	s	CAPACITOR,CERAMIC 0.022MF/25V
C1454	1-164-227-11	s	CAPACITOR,CERAMIC 0.022MF/25V
C1455	1-164-227-11	s	CAPACITOR,CERAMIC 0.022MF/25V
C1456	1-164-227-11	s	CAPACITOR,CERAMIC 0.022MF/25V
C1457	1-107-826-11	s	CAPACITOR,CHIP CERAMIC 0.1MF
C1458	1-104-608-11	s	CAPACITOR,ELECT 33MF/6.3V
C1459	1-115-416-11	s	CAPACITOR,CERAMIC 1000PF/25V
C1460	1-107-826-11	s	CAPACITOR,CHIP CERAMIC 0.1MF
C1461	1-107-826-11	s	CAPACITOR,CHIP CERAMIC 0.1MF
C1462	1-104-608-11	s	CAPACITOR,ELECT 33MF/6.3V
C1463	1-107-826-11	s	CAPACITOR,CHIP CERAMIC 0.1MF
C1464	1-107-826-11	s	CAPACITOR,CHIP CERAMIC 0.1MF
C1501	1-104-608-11	s	CAPACITOR,ELECT 33MF/6.3V
C1502	1-104-608-11	s	CAPACITOR,ELECT 33MF/6.3V
C1503	1-107-826-11	s	CAPACITOR,CHIP CERAMIC 0.1MF
C1504	1-107-826-11	s	CAPACITOR,CHIP CERAMIC 0.1MF
C1505	1-164-227-11	s	CAPACITOR,CERAMIC 0.022MF/25V
C1506	1-104-608-11	s	CAPACITOR,ELECT 33MF/6.3V
C1507	1-164-227-11	s	CAPACITOR,CERAMIC 0.022MF/25V
C1508	1-107-826-11	s	CAPACITOR,CHIP CERAMIC 0.1MF
C1509	1-162-917-11	s	CAPACITOR,CERAMIC 15PF/50V CH
C1510	1-162-919-11	s	CAPACITOR,CERAMIC 22PF/50V CH
C1511	1-162-928-11	s	CAPACITOR,CERAMIC 120PF/50V CH
C1512	1 162 959 11	s	CAPACITOR,CERAMIC 330PF/50V SL
C1513	1-162-915-11	s	CAPACITOR,CERAMIC 10PF/50V CH
C1514	1-162-910-11	s	CAPACITOR,CERAMIC 5PF/50V 1608
C1515	1-162-916-11	s	CAPACITOR,CERAMIC 12PF/50V CH
C1516	1-164-227-11	s	CAPACITOR,CERAMIC 0.022MF/25V
C1517	1-162-916-11	s	CAPACITOR,CERAMIC 12PF/50V CH
C1518	1-162-923-11	s	CAPACITOR,CERAMIC 47PF/50V CH
C1519	1-164-227-11	s	CAPACITOR,CERAMIC 0.022MF/25V
C1521	1-164-227-11	s	CAPACITOR,CERAMIC 0.022MF/25V
C1522	1-164-227-11	s	CAPACITOR,CERAMIC 0.022MF/25V
C1523	1-164-227-11	s	CAPACITOR,CERAMIC 0.022MF/25V
C1524	1-164-227-11	s	CAPACITOR,CERAMIC 0.022MF/25V
C1525	1-126-394-11	s	CAPACITOR ELECT 10MF/16V(CHIP)
C1526	1-164-227-11	s	CAPACITOR,CERAMIC 0.022MF/25V
C1527	1-164-227-11	s	CAPACITOR,CERAMIC 0.022MF/25V
C1528	1-104-608-11	s	CAPACITOR,ELECT 33MF/6.3V
C1529	1-107-826-11	s	CAPACITOR,CHIP CERAMIC 0.1MF
C1530	1-164-227-11	s	CAPACITOR,CERAMIC 0.022MF/25V
C1531	1-164-227-11	s	CAPACITOR,CERAMIC 0.022MF/25V
C1532	1-162-921-11	s	CAPACITOR,CERAMIC 33PF/50V CH
C1533	1-164-227-11	s	CAPACITOR,CERAMIC 0.022MF/25V
C1534	1-164-227-11	s	CAPACITOR,CERAMIC 0.022MF/25V
C1535	1-164-227-11	s	CAPACITOR,CERAMIC 0.022MF/25V
C1536	1-162-921-11	s	CAPACITOR,CERAMIC 33PF/50V CH
C1601	1-126-401-11	s	CAPACITOR,ELECT 1MF/50V(CHIP)
C1602	1-126-401-11	s	CAPACITOR,ELECT 1MF/50V(CHIP)
C1603	1-164-227-11	s	CAPACITOR,CERAMIC 0.022MF/25V
C1604	1-162-915-11	s	CAPACITOR,CERAMIC 10PF/50V CH
C1605	1-162-923-11	s	CAPACITOR,CERAMIC 47PF/50V CH
C1606	1-164-227-11	s	CAPACITOR,CERAMIC 0.022MF/25V
C1607	1-164-227-11	s	CAPACITOR,CERAMIC 0.022MF/25V
C1608	1-164-230-11	s	CAPACITOR,CERAMIC 220PF/50V
C1609	1-126-396-11	s	CAPACITOR ELECT 47MF/16V(CHIP)

(DM-114P BOARD)

Ref. No. or Q'ty	Part No.	SP	Description
C1610	1-162-923-11	s	CAPACITOR,CERAMIC 47PF/50V CH
C1611	1-107-826-11	s	CAPACITOR,CHIP CERAMIC 0.1MF
C1612	1-162-970-11	s	CAPACITOR CERAMIC 0.01MF/25V B
C1613	1-115-416-11	s	CAPACITOR,CERAMIC 1000PF/25V
C1614	1-126-394-11	s	CAPACITOR ELECT 10MF/16V(CHIP)
C1615	1-126-401-11	s	CAPACITOR,ELECT 1MF/50V(CHIP)
C1616	1-107-826-11	s	CAPACITOR,CHIP CERAMIC 0.1MF
C1617	1-107-826-11	s	CAPACITOR,CHIP CERAMIC 0.1MF
C1618	1-126-401-11	s	CAPACITOR,ELECT 1MF/50V(CHIP)
C1619	1-107-826-11	s	CAPACITOR,CHIP CERAMIC 0.1MF
C1620	1-107-826-11	s	CAPACITOR,CHIP CERAMIC 0.1MF
C1621	1-126-392-11	s	CAPACITOR,CHIP ELECT100MF/6.3V
C1622	1-162-927-11	s	CAPACITOR,CERAMIC 100PF/50V CH
C1623	1-164-227-11	s	CAPACITOR,CERAMIC 0.022MF/25V
C1624	1-164-227-11	s	CAPACITOR,CERAMIC 0.022MF/25V
C1625	1-162-923-11	s	CAPACITOR,CERAMIC 47PF/50V CH
C1626	1-164-227-11	s	CAPACITOR,CERAMIC 0.022MF/25V
C1627	1-164-315-11	s	CAPACITOR,CERAMIC 470PF/50V CH
C1628	1-162-970-11	s	CAPACITOR CERAMIC 0.01MF/25V B
C1629	1-164-227-11	s	CAPACITOR,CERAMIC 0.022MF/25V
C1630	1-164-227-11	s	CAPACITOR,CERAMIC 0.022MF/25V
C1631	1-162-927-11	s	CAPACITOR,CERAMIC 100PF/50V CH
C1632	1-126-392-11	s	CAPACITOR,CHIP ELECT100MF/6.3V
C1633	1-164-227-11	s	CAPACITOR,CERAMIC 0.022MF/25V
C1634	1-162-927-11	s	CAPACITOR,CERAMIC 100PF/50V CH
C1635	1-162-927-11	s	CAPACITOR,CERAMIC 100PF/50V CH
C1636	1 164 227 11	s	CAPACITOR,CERAMIC 0.022MF/25V
C1637	1-162-928-11	s	CAPACITOR,CERAMIC 120PF/50V CH
C1638	1-164-227-11	s	CAPACITOR,CERAMIC 0.022MF/25V
C1639	1-162-927-11	s	CAPACITOR,CERAMIC 100PF/50V CH
C1640	1-164-227-11	s	CAPACITOR,CERAMIC 0.022MF/25V
C1641	1-107-826-11	s	CAPACITOR,CHIP CERAMIC 0.1MF
C1642	1-107-826-11	s	CAPACITOR,CHIP CERAMIC 0.1MF
C1643	1-107-826-11	s	CAPACITOR,CHIP CERAMIC 0.1MF
C1644	1-126-392-11	s	CAPACITOR,CHIP ELECT100MF/6.3V
C1645	1-135-149-21	s	CAPACITOR TANTALUM 2.2MF/10V
C1646	1-135-146-21	s	CAPACITOR TANTALUM 0.68MF/25V
C1647	1-162-927-11	s	CAPACITOR,CERAMIC 100PF/50V CH
C1648	1-135-149-21	s	CAPACITOR TANTALUM 2.2MF/10V
C1649	1-135-146-21	s	CAPACITOR TANTALUM 0.68MF/25V
C1650	1-135-210-11	s	CAPACITOR TANTAL 4.7MF/10V
C1651	1-107-826-11	s	CAPACITOR,CHIP CERAMIC 0.1MF
C1652	1-107-826-11	s	CAPACITOR,CHIP CERAMIC 0.1MF
C1653	1-135-210-11	s	CAPACITOR TANTAL 4.7MF/10V
C1654	1-164-227-11	s	CAPACITOR,CERAMIC 0.022MF/25V
C1655	1-107-826-11	s	CAPACITOR,CHIP CERAMIC 0.1MF
C1656	1-164-227-11	s	CAPACITOR,CERAMIC 0.022MF/25V
C1657	1-164-227-11	s	CAPACITOR,CERAMIC 0.022MF/25V
C1658	1-107-826-11	s	CAPACITOR,CHIP CERAMIC 0.1MF
C1659	1-107-826-11	s	CAPACITOR,CHIP CERAMIC 0.1MF
C1660	1-115-416-11	s	CAPACITOR,CERAMIC 1000PF/25V
C1661	1-104-608-11	s	CAPACITOR,ELECT 33MF/6.3V
C1662	1-104-608-11	s	CAPACITOR,ELECT 33MF/6.3V
C1663	1-107-826-11	s	CAPACITOR,CHIP CERAMIC 0.1MF
C1664	1-107-826-11	s	CAPACITOR,CHIP CERAMIC 0.1MF
C1665	1-107-826-11	s	CAPACITOR,CHIP CERAMIC 0.1MF
C1666	1-164-227-11	s	CAPACITOR,CERAMIC 0.022MF/25V
C1667	1-164-227-11	s	CAPACITOR,CERAMIC 0.022MF/25V
C1701	1-164-227-11	s	CAPACITOR,CERAMIC 0.022MF/25V

(DM-114P BOARD)

Ref. No. or Q'ty	Part No.	SP	Description
C1702	1-164-227-11	s	CAPACITOR,CERAMIC 0.022MF/25V
C1703	1-164-227-11	s	CAPACITOR,CERAMIC 0.022MF/25V
C1704	1-164-227-11	s	CAPACITOR,CERAMIC 0.022MF/25V
C1705	1-164-227-11	s	CAPACITOR,CERAMIC 0.022MF/25V
C1706	1-164-227-11	s	CAPACITOR,CERAMIC 0.022MF/25V
C1707	1-164-227-11	s	CAPACITOR,CERAMIC 0.022MF/25V
C1708	1-164-227-11	s	CAPACITOR,CERAMIC 0.022MF/25V
C1709	1-164-227-11	s	CAPACITOR,CERAMIC 0.022MF/25V
C1710	1-164-227-11	s	CAPACITOR,CERAMIC 0.022MF/25V
C1711	1-164-227-11	s	CAPACITOR,CERAMIC 0.022MF/25V
C1712	1-126-392-11	s	CAPACITOR,CHIP ELECT100MF/6.3V
C1713	1-164-227-11	s	CAPACITOR,CERAMIC 0.022MF/25V
C1714	1-126-392-11	s	CAPACITOR,CHIP ELECT100MF/6.3V
C1715	1-164-227-11	s	CAPACITOR,CERAMIC 0.022MF/25V
C1716	1-162-925-11	s	CAPACITOR,CERAMIC 68PF/50V CH
C1717	1-162-925-11	s	CAPACITOR,CERAMIC 68PF/50V CH
C1718	1-162-925-11	s	CAPACITOR,CERAMIC 68PF/50V CH
C1719	1-162-925-11	s	CAPACITOR,CERAMIC 68PF/50V CH
C1720	1-162-925-11	s	CAPACITOR,CERAMIC 68PF/50V CH
C1721	1-162-925-11	s	CAPACITOR,CERAMIC 68PF/50V CH
C1722	1-162-925-11	s	CAPACITOR,CERAMIC 68PF/50V CH
C1723	1-162-925-11	s	CAPACITOR,CERAMIC 68PF/50V CH
C1724	1-162-925-11	s	CAPACITOR,CERAMIC 68PF/50V CH
C1725	1-162-925-11	s	CAPACITOR,CERAMIC 68PF/50V CH
C1726	1-162-925-11	s	CAPACITOR,CERAMIC 68PF/50V CH
C1727	1-162-925-11	s	CAPACITOR,CERAMIC 68PF/50V CH
C1728	1 162 925 11	s	CAPACITOR,CERAMIC 68PF/50V CH
C1729	1-162-925-11	s	CAPACITOR,CERAMIC 68PF/50V CH
C1730	1-162-925-11	s	CAPACITOR,CERAMIC 68PF/50V CH
C1731	1-164-227-11	s	CAPACITOR,CERAMIC 0.022MF/25V
C1732	1-164-227-11	s	CAPACITOR,CERAMIC 0.022MF/25V
C1733	1-164-227-11	s	CAPACITOR,CERAMIC 0.022MF/25V
C1734	1-164-227-11	s	CAPACITOR,CERAMIC 0.022MF/25V
C1735	1-164-227-11	s	CAPACITOR,CERAMIC 0.022MF/25V
C1736	1-164-227-11	s	CAPACITOR,CERAMIC 0.022MF/25V
C1737	1-164-227-11	s	CAPACITOR,CERAMIC 0.022MF/25V
C1738	1-164-227-11	s	CAPACITOR,CERAMIC 0.022MF/25V
C1739	1-164-227-11	s	CAPACITOR,CERAMIC 0.022MF/25V
C1740	1-104-851-11	s	CAPACITOR,TANTALUM 10MF/10V
C1741	1-164-227-11	s	CAPACITOR,CERAMIC 0.022MF/25V
C1742	1-164-227-11	s	CAPACITOR,CERAMIC 0.022MF/25V
C1743	1-107-826-11	s	CAPACITOR,CHIP CERAMIC 0.1MF
C1800	1-164-227-11	s	CAPACITOR,CERAMIC 0.022MF/25V
C1801	1-107-826-11	s	CAPACITOR,CHIP CERAMIC 0.1MF
C1802	1-107-826-11	s	CAPACITOR,CHIP CERAMIC 0.1MF
C1803	1-162-927-11	s	CAPACITOR,CERAMIC 100PF/50V CH
C1804	1-104-608-11	s	CAPACITOR,ELECT 33MF/6.3V
C1805	1-104-608-11	s	CAPACITOR,ELECT 33MF/6.3V
C1806	1-107-826-11	s	CAPACITOR,CHIP CERAMIC 0.1MF
C1807	1-107-826-11	s	CAPACITOR,CHIP CERAMIC 0.1MF
C1808	1-126-394-11	s	CAPACITOR ELECT 10MF/16V(CHIP)
C1809	1-164-227-11	s	CAPACITOR,CERAMIC 0.022MF/25V
C1810	1-162-927-11	s	CAPACITOR,CERAMIC 100PF/50V CH
C1811	1-162-919-11	s	CAPACITOR,CERAMIC 22PF/50V CH
C1812	1-162-921-11	s	CAPACITOR,CERAMIC 33PF/50V CH
C1813	1-104-608-11	s	CAPACITOR,ELECT 33MF/6.3V
C1814	1-162-919-11	s	CAPACITOR,CERAMIC 22PF/50V CH
C1815	1-107-826-11	s	CAPACITOR,CHIP CERAMIC 0.1MF
C1816	1-162-927-11	s	CAPACITOR,CERAMIC 100PF/50V CH

(DM-114P BOARD)

Ref. No. or Q'ty	Part No.	SP	Description
C1817	1-164-227-11	s	CAPACITOR,CERAMIC 0.022MF/25V
C1818	1-162-921-11	s	CAPACITOR,CERAMIC 33PF/50V CH
C1819	1-104-608-11	s	CAPACITOR,ELECT 33MF/6.3V
C1820	1-164-227-11	s	CAPACITOR,CERAMIC 0.022MF/25V
C1821	1-164-227-11	s	CAPACITOR,CERAMIC 0.022MF/25V
C1822	1-107-826-11	s	CAPACITOR,CHIP CERAMIC 0.1MF
C1823	1-162-927-11	s	CAPACITOR,CERAMIC 100PF/50V CH
C1824	1-126-392-11	s	CAPACITOR,CHIP ELECT100MF/6.3V
C1825	1-164-227-11	s	CAPACITOR,CERAMIC 0.022MF/25V
C1826	1-164-227-11	s	CAPACITOR,CERAMIC 0.022MF/25V
C1827	1-104-608-11	s	CAPACITOR,ELECT 33MF/6.3V
C1828	1-107-826-11	s	CAPACITOR,CHIP CERAMIC 0.1MF
C1829	1-164-227-11	s	CAPACITOR,CERAMIC 0.022MF/25V
C1830	1-164-227-11	s	CAPACITOR,CERAMIC 0.022MF/25V
C1831	1-164-227-11	s	CAPACITOR,CERAMIC 0.022MF/25V
C1832	1-126-392-11	s	CAPACITOR,CHIP ELECT100MF/6.3V
C1833	1-162-927-11	s	CAPACITOR,CERAMIC 100PF/50V CH
C1834	1-104-852-11	s	CAPACITOR,TANTALUM 22MF/10V
C1835	1-164-227-11	s	CAPACITOR,CERAMIC 0.022MF/25V
C1837	1-164-227-11	s	CAPACITOR,CERAMIC 0.022MF/25V
C1838	1-164-227-11	s	CAPACITOR,CERAMIC 0.022MF/25V
C1839	1-107-826-11	s	CAPACITOR,CHIP CERAMIC 0.1MF
C1840	1-104-852-11	s	CAPACITOR,TANTALUM 22MF/10V
C1841	1-164-227-11	s	CAPACITOR,CERAMIC 0.022MF/25V
C1842	1-164-227-11	s	CAPACITOR,CERAMIC 0.022MF/25V
C1843	1-164-227-11	s	CAPACITOR,CERAMIC 0.022MF/25V
C1844	1 104 608 11	s	CAPACITOR,ELECT 33MF/6.3V
C1845	1-107-826-11	s	CAPACITOR,CHIP CERAMIC 0.1MF
C1846	1-164-227-11	s	CAPACITOR,CERAMIC 0.022MF/25V
C1847	1-135-180-21	s	CAPACITOR TANTALUM 3.3MF/10V
C1848	1-135-180-21	s	CAPACITOR TANTALUM 3.3MF/10V
C1849	1-107-826-11	s	CAPACITOR,CHIP CERAMIC 0.1MF
C1850	1-135-072-21	s	CAPACITOR,TANTALUM 0.22MF/35V
C1851	1-164-227-11	s	CAPACITOR,CERAMIC 0.022MF/25V
C1852	1-126-394-11	s	CAPACITOR ELECT 10MF/16V(CHIP)
C1853	1-164-227-11	s	CAPACITOR,CERAMIC 0.022MF/25V
C1854	1-107-826-11	s	CAPACITOR,CHIP CERAMIC 0.1MF
C1855	1-164-227-11	s	CAPACITOR,CERAMIC 0.022MF/25V
C1856	1-107-826-11	s	CAPACITOR,CHIP CERAMIC 0.1MF
C1857	1-107-826-11	s	CAPACITOR,CHIP CERAMIC 0.1MF
C1858	1-164-227-11	s	CAPACITOR,CERAMIC 0.022MF/25V
C1859	1-107-826-11	s	CAPACITOR,CHIP CERAMIC 0.1MF
C1860	1-162-921-11	s	CAPACITOR,CERAMIC 33PF/50V CH
C1861	1-164-227-11	s	CAPACITOR,CERAMIC 0.022MF/25V
C1862	1-107-826-11	s	CAPACITOR,CHIP CERAMIC 0.1MF
C1863	1-107-826-11	s	CAPACITOR,CHIP CERAMIC 0.1MF
C1864	1-164-227-11	s	CAPACITOR,CERAMIC 0.022MF/25V
C1865	1-162-920-11	s	CAPACITOR,CERAMIC 27PF/50V CH
C1866	1-107-826-11	s	CAPACITOR,CHIP CERAMIC 0.1MF
C1867	1-107-826-11	s	CAPACITOR,CHIP CERAMIC 0.1MF
C1868	1-107-826-11	s	CAPACITOR,CHIP CERAMIC 0.1MF
C1869	1-107-826-11	s	CAPACITOR,CHIP CERAMIC 0.1MF
C1870	1-162-970-11	s	CAPACITOR CERAMIC 0.01MF/25V B
C1871	1-164-227-11	s	CAPACITOR,CERAMIC 0.022MF/25V
C1872	1-107-826-11	s	CAPACITOR,CHIP CERAMIC 0.1MF
C1873	1-104-608-11	s	CAPACITOR,ELECT 33MF/6.3V
C1874	1-164-230-11	s	CAPACITOR,CERAMIC 220PF/50V
C1875	1-164-315-11	s	CAPACITOR,CERAMIC 470PF/50V CH
C1876	1-162-927-11	s	CAPACITOR,CERAMIC 100PF/50V CH

(DM-114P BOARD)

Ref. No. or Q'ty	Part No.	SP	Description	
C1877	1-164-227-11	s	CAPACITOR,CERAMIC 0.022MF/25V	
C1878	1-164-227-11	s	CAPACITOR,CERAMIC 0.022MF/25V	
C1879	1-164-227-11	s	CAPACITOR,CERAMIC 0.022MF/25V	
C1880	1-164-227-11	s	CAPACITOR,CERAMIC 0.022MF/25V	
C1881	1-164-227-11	s	CAPACITOR,CERAMIC 0.022MF/25V	
C1882	1-164-227-11	s	CAPACITOR,CERAMIC 0.022MF/25V	
CN1	1-580-057-11	o	PIN,CONNECTOR 4P	
CN100	1-784-200-11	o	CONNECTOR, BOARD TO BOARD 140P	
D101	8-719-941-23	s	DIODE DA204U	
D301	8-719-941-23	s	DIODE DA204U	
D501	8-719-024-81	s	DIODE 1SS300-TE85L	
D502	8-719-024-81	s	DIODE 1SS300-TE85L	
D503	8-719-941-23	s	DIODE DA204U	
D504	8-719-404-35	s	DIODE MA141WK	
D505	8-719-029-55	s	ZENER DIODE RD2.0UH-T1	
D701	8-719-024-81	s	DIODE 1SS300-TE85L	
D702	8-719-941-23	s	DIODE DA204U	
D703	8-719-404-35	s	DIODE MA141WK	
D704	8-719-029-55	s	ZENER DIODE RD2.0UH-T1	
D901	8-719-991-27	s	LED CL-170G-CD	
D902	8-719-941-04	s	DIODE SB007-03CP	
D903	8-719-029-55	s	ZENER DIODE RD2.0UH-T1	
D904	8-719-029-55	s	ZENER DIODE RD2.0UH-T1	
D905	8-719-029-55	s	ZENER DIODE RD2.0UH-T1	
D906	8-719-029-55	s	ZENER DIODE RD2.0UH-T1	
D907	8 719 029 55	s	ZENER DIODE RD2.0UH T1	
D908	8-719-029-55	s	ZENER DIODE RD2.0UH-T1	
D1101	8-719-941-23	s	DIODE DA204U	
D1102	8-719-941-23	s	DIODE DA204U	
D1103	8-719-404-35	s	DIODE MA141WK	
D1104	8-719-941-23	s	DIODE DA204U	
D1201	8-719-941-23	s	DIODE DA204U	
D1202	8-719-941-23	s	DIODE DA204U	
D1204	8-719-941-23	s	DIODE DA204U	
D1301	8-719-941-23	s	DIODE DA204U	
D1401	8-719-941-23	s	DIODE DA204U	
D1402	8-719-941-23	s	DIODE DA204U	
D1405	8-719-041-39	s	DIODE KV1470	(5MA)
D1406	8-719-041-39	s	DIODE KV1470	(5MA)
D1501	8-719-941-23	s	DIODE DA204U	
D1502	8-719-024-81	s	DIODE 1SS300-TE85L	
D1601	8-719-941-23	s	DIODE DA204U	
D1602	8-719-941-23	s	DIODE DA204U	
D1603	8-719-041-39	s	DIODE KV1470	(5MA)
D1604	8-719-041-39	s	DIODE KV1470	(5MA)
D1701	8-719-404-35	s	DIODE MA141WK	
D1702	8-719-024-81	s	DIODE 1SS300-TE85L	
D1703	8-719-024-81	s	DIODE 1SS300-TE85L	
D1704	8-719-024-81	s	DIODE 1SS300-TE85L	
D1705	8-719-024-81	s	DIODE 1SS300-TE85L	
D1801	8-719-024-81	s	DIODE 1SS300-TE85L	
D1802	8-719-991-27	s	LED CL-170G-CD	
D1803	8-719-941-23	s	DIODE DA204U	
D1808	8-719-941-86	s	DIODE DAN202U	
D1809	8-719-941-09	s	DIODE DAP202U	
D1810	8-719-941-09	s	DIODE DAP202U	
D1910	8-719-938-72	s	DIODE SB01-05CP	(RECTI)

(DM-114P BOARD)

Ref. No. or Q'ty	Part No.	SP	Description
FL101	1-416-645-11	s	DELAY LINE
FL103	1-416-478-11	s	DELAY LINE
FL301	1-416-646-11	s	DELAY LINE
FL303	1-416-480-11	s	DELAY LINE
FL501	1-234-007-11	s	FILTER, LOW PASS
FL502	1-234-001-11	s	FILTER, LOW PASS
FL503	1-234-000-11	s	FILTER, LOW PASS
FL504	1-233-999-11	s	FILTER, LOW PASS
FL701	1-234-002-11	s	FILTER, LOW PASS
FL702	1-234-008-11	s	FILTER, LOW PASS
FL703	1-234-004-11	s	FILTER, LOW PASS
FL1101	1-234-009-11	s	FILTER, LOW PASS
FL1201	1-234-003-11	s	FILTER, LOW PASS
IC101	8-752-052-75	s	IC CXA1479Q
IC102	8-759-523-02	s	IC TC74HC4053AFT(EL)
IC103	8-759-112-53	s	IC UPC1663G
IC104	8-759-058-64	s	IC TC7S32FU-TE85R
IC105	8-752-052-73	s	IC CXA1451M
IC106	8-759-523-01	s	IC TC74HC4052AFT(EL)
IC108	8-759-287-54	s	IC TL084CPW (E20)
IC109	8-759-523-78	s	IC TC74VHC00FT(EL)
IC110	8-759-058-62	s	IC TC7S08FU-TE85R
IC111	8-759-058-62	s	IC TC7S08FU-TE85R
IC301	8-759-242-78	s	IC TC7W02F
IC302	8-752-052-75	s	IC CXA1479Q
IC303	8-759-927-46	s	IC SN74HC00ANS
IC304	8 759 523 02	s	IC TC74HC4053AFT(EL)
IC305	8-752-052-73	s	IC CXA1451M
IC308	8-759-287-54	s	IC TL084CPW (E20)
IC309	8-759-082-58	s	IC TC7W08FU
IC310	8-759-058-56	s	IC TC7S02FU(TE85R)
IC311	8-759-058-62	s	IC TC7S08FU-TE85R
IC501	8-759-058-58	s	IC TC7S04FU-TE85R
IC502	8-759-082-59	s	IC TC7W32FU
IC503	8-759-359-66	s	IC TL082CPW (E05)
IC504	8-752-061-02	s	IC CXA1450M
IC505	8-752-052-48	s	IC CXA1370Q
IC506	8-759-058-58	s	IC TC7S04FU-TE85R
IC507	8-752-061-02	s	IC CXA1450M
IC508	1-810-128-11	s	IC BP-015
IC509	8-752-061-02	s	IC CXA1450M
IC510	8-752-061-02	s	IC CXA1450M
IC511	8-752-052-73	s	IC CXA1451M
IC512	8-759-260-53	s	IC LM2903PW-E05
IC513	8-759-012-00	s	IC MC10H116M
IC701	8-759-082-59	s	IC TC7W32FU
IC702	8-752-052-48	s	IC CXA1370Q
IC703	1-810-128-11	s	IC BP-015
IC704	8-759-260-53	s	IC LM2903PW-E05
IC705	8-752-052-73	s	IC CXA1451M
IC706	8-759-012-00	s	IC MC10H116M
IC710	8-759-058-62	s	IC TC7S08FU-TE85R
IC901	8-759-523-02	s	IC TC74HC4053AFT(EL)
IC902	8-759-523-02	s	IC TC74HC4053AFT(EL)
IC903	8-759-523-02	s	IC TC74HC4053AFT(EL)
IC904	8-759-082-61	s	IC TC4W53FU
IC905	8-759-635-27	s	IC M62352GP
IC906	8-759-635-27	s	IC M62352GP

(DM-114P BOARD)

Ref. No. or Q'ty	Part No.	SP	Description
IC907	8-759-523-03	s	IC TC74HC4066AFT(EL)
IC908	8-759-263-32	s	IC UPD78011BGC-608-AB8
IC909	8-759-488-17	s	IC BR93LC46F-E2
IC910	8-759-485-79	s	IC TC7SET08FU (TE85L)
IC911	8-759-388-62	s	IC NJU7062M (TE2)
IC913	8-759-172-41	s	IC L78M09T-TL
IC914	8-759-337-40	s	IC NJM2904V(TE2)
IC915	8-759-337-40	s	IC NJM2904V(TE2)
IC916	8-759-337-40	s	IC NJM2904V(TE2)
IC917	8-759-710-88	s	IC NJM431U
IC918	8-759-710-88	s	IC NJM431U
IC919	8-759-710-88	s	IC NJM431U
IC920	8-729-045-28	s	TRANSISTOR SI4532DY-T1
IC921	8-729-045-28	s	TRANSISTOR SI4532DY-T1
IC922	8-729-045-28	s	TRANSISTOR SI4532DY-T1
IC1101	8-759-082-57	s	IC TC7W04FU
IC1102	8-759-702-08	s	IC NJM360M
IC1103	8-759-287-54	s	IC TL084CPW (E20)
IC1104	8-759-082-60	s	IC TC7S66FU
IC1105	8-759-082-61	s	IC TC4W53FU
IC1106	8-759-082-58	s	IC TC7W08FU
IC1107	8-759-337-40	s	IC NJM2904V(TE2)
IC1108	8-752-376-32	s	IC CXD2310AR
IC1109	8-752-362-70	s	IC CXD101-106Q
IC1110	8-759-337-40	s	IC NJM2904V(TE2)
IC1111	8-759-710-88	s	IC NJM431U
IC1112	8 759 710 88	s	IC NJM431U
IC1113	8-759-710-88	s	IC NJM431U
IC1114	8-759-209-90	s	IC TC4S71F
IC1201	8-759-287-54	s	IC TL084CPW (E20)
IC1202	8-759-082-60	s	IC TC7S66FU
IC1203	8-759-082-61	s	IC TC4W53FU
IC1207	8-752-376-32	s	IC CXD2310AR
IC1208	8-752-362-70	s	IC CXD101-106Q
IC1214	8-759-209-90	s	IC TC4S71F
IC1301	8-752-358-08	s	IC CXD2221Q
IC1302	8-759-359-66	s	IC TL082CPW (E05)
IC1303	8-759-082-60	s	IC TC7S66FU
IC1304	8-759-973-82	s	IC TLC549IPS
IC1305	8-759-395-37	s	IC XRD7523AID-JTR
IC1306	8-759-359-66	s	IC TL082CPW (E05)
IC1307	8-759-082-59	s	IC TC7W32FU
IC1402	8-759-287-54	s	IC TL084CPW (E20)
IC1404	8-759-907-81	s	IC SN74LS221N(S)
IC1405	8-759-702-08	s	IC NJM360M
IC1406	8-759-058-62	s	IC TC7S08FU-TE85R
IC1407	8-759-523-03	s	IC TC74HC4066AFT(EL)
IC1408	8-759-242-78	s	IC TC7W02F
IC1409	8-759-287-54	s	IC TL084CPW (E20)
IC1410	8-759-196-93	s	IC TC7SH00FU-TE85R
IC1411	8-759-196-93	s	IC TC7SH00FU-TE85R
IC1501	8-752-358-08	s	IC CXD2221Q
IC1502	8-759-287-54	s	IC TL084CPW (E20)
IC1503	8-759-082-60	s	IC TC7S66FU
IC1504	8-759-973-82	s	IC TLC549IPS
IC1505	8-759-395-37	s	IC XRD7523AID-JTR
IC1506	8-759-359-66	s	IC TL082CPW (E05)
IC1507	8-759-196-93	s	IC TC7SH00FU-TE85R
IC1510	8-759-196-93	s	IC TC7SH00FU-TE85R

(DM-114P BOARD)

Ref. No. or Q'ty	Part No.	SP	Description
IC1601	8-759-184-64	s	IC TC4W66FU
IC1603	8-759-260-53	s	IC LM2903PW-E05
IC1604	8-759-082-61	s	IC TC4W53FU
IC1605	8-759-287-54	s	IC TL084CPW (E20)
IC1606	8-759-523-03	s	IC TC74HC4066AFT(EL)
IC1608	8-759-702-08	s	IC NJM360M
IC1609	8-759-907-81	s	IC SN74LS221N(S)
IC1610	8-759-058-62	s	IC TC7S08FU-TE85R
IC1611	8-759-242-78	s	IC TC7W02F
IC1612	8-759-359-66	s	IC TL082CPW (E05)
IC1614	8-759-524-19	s	IC TC74VHC164FT(EL)
IC1701	8-759-058-64	s	IC TC7S32FU-TE85R
IC1702	8-759-194-81	s	IC CXD8395AQ
IC1703	8-759-194-81	s	IC CXD8395AQ
IC1704	8-752-359-55	s	IC CXK48324R
IC1705	8-752-359-55	s	IC CXK48324R
IC1706	8-759-277-63	s	IC TC7W14FU (TE12R)
IC1707	8-759-523-94	s	IC TC74VHC32FT(EL)
IC1708	8-752-341-32	s	IC CXD2209Q
IC1709	8-759-524-22	s	IC TC74VHC175FT(EL)
IC1710	8-759-523-95	s	IC TC74VHC74FT(EL)
IC1711	8-759-524-18	s	IC TC74VHC163FT(EL)
IC1712	8-752-341-32	s	IC CXD2209Q
IC1713	8-752-341-32	s	IC CXD2209Q
IC1714	8-759-399-52	s	IC CXD8935BQ
IC1715	8-759-277-63	s	IC TC7W14FU (TE12R)
IC1716	8 759 524 10	s	IC TC74VHC157FT (EL)
IC1717	8-759-196-96	s	IC TC7SH08FU (TE85R)
IC1800	8-759-082-58	s	IC TC7W08FU
IC1801	8-759-491-51	s	IC TC74VHCT245AFT(EL)
IC1802	8-759-490-41	s	IC TC74VHCT541AFT(EL)
IC1803	8-759-082-58	s	IC TC7W08FU
IC1804	8-759-523-84	s	IC TC74VHC14FT (EL)
IC1805	8-759-387-54	s	IC S-80727-SN-DQ-T1
IC1806	8-759-058-62	s	IC TC7S08FU-TE85R
IC1807	8-759-083-94	s	IC TC7W74FU
IC1808	8-759-582-56	s	IC UPD78014FGC-639-AB8
IC1809	8-759-702-08	s	IC NJM360M
IC1810	8-759-195-81	s	IC TC7S86FU
IC1811	8-759-058-62	s	IC TC7S08FU-TE85R
IC1812	8-759-488-17	s	IC BR93LC46F-E2
IC1813	8-759-395-37	s	IC XRD7523AID-JTR
IC1814	8-759-295-09	s	IC TLC2932IPW
IC1815	8-759-710-88	s	IC NJM431U
IC1816	8-759-195-81	s	IC TC7S86FU
IC1817	8-759-278-58	s	IC NJM4558V (TE2)
IC1818	8-759-082-60	s	IC TC7S66FU
IC1819	8-759-359-66	s	IC TL082CPW (E05)
IC1820	8-759-260-53	s	IC LM2903PW-E05
IC1821	8-759-082-57	s	IC TC7W04FU
IC1822	8-759-058-62	s	IC TC7S08FU-TE85R
IC1823	8-759-523-97	s	IC TC74VHC123AFT(EL)
IC1824	8-752-356-05	s	IC CXD206-104Q
IC1825	8-759-524-50	s	IC TC74VHC541FT(EL)
IC1826	8-759-524-50	s	IC TC74VHC541FT(EL)
IC1827	8-759-359-66	s	IC TL082CPW (E05)
IC1828	8-759-523-97	s	IC TC74VHC123AFT(EL)
IC1829	8-752-360-90	s	IC CXD303-101Q
IC1830	8-752-355-09	s	IC CXD104-114Q

(DM-114P BOARD)

Ref. No. or Q'ty	Part No.	SP	Description
IC1831	8-759-524-52	s	IC TC74VHC574FT(EL)
IC1832	8-759-524-52	s	IC TC74VHC574FT(EL)
IC1833	8-759-907-81	s	IC SN74LS221N(S)
IC1834	8-759-058-64	s	IC TC7S32FU-TE85R
L102	1-410-381-11	s	CHIP INDUCTOR 10UH (3225)
L103	1-410-369-11	s	CHIP INDUCTOR 1.0UH (3225)
L104	1-410-383-31	s	INDUCTOR,CHIP 15UH (3225)
L105	1-410-372-21	s	CHIP INDUCTOR 1.8UH (3225)
L106	1-410-380-31	s	INDUCTOR,CHIP 8.2UH (3225)
L107	1-410-378-11	s	INDUCTOR,CHIP 5.6UH (3225)
L108	1-410-381-11	s	CHIP INDUCTOR 10UH (3225)
L109	1-410-378-11	s	INDUCTOR,CHIP 5.6UH (3225)
L110	1-410-381-11	s	CHIP INDUCTOR 10UH (3225)
L111	1-410-380-31	s	INDUCTOR,CHIP 8.2UH (3225)
L112	1-410-381-11	s	CHIP INDUCTOR 10UH (3225)
L113	1-410-380-31	s	INDUCTOR,CHIP 8.2UH (3225)
L114	1-410-375-11	s	CHIP INDUCTOR 3.3UH (3225)
L115	1-410-380-31	s	INDUCTOR,CHIP 8.2UH (3225)
L116	1-410-378-11	s	INDUCTOR,CHIP 5.6UH (3225)
L117	1-414-398-11	s	INDUCTOR (SMD) 10UH
L118	1-414-398-11	s	INDUCTOR (SMD) 10UH
L119	1-414-398-11	s	INDUCTOR (SMD) 10UH
L120	1-414-398-11	s	INDUCTOR (SMD) 10UH
L121	1-410-371-41	s	CHIP INDUCTOR 1.5UH
L122	1-410-371-41	s	CHIP INDUCTOR 1.5UH
L123	1-414-398-11	s	INDUCTOR (SMD) 10UH
L124	1 410 382 31	s	INDUCTOR,CHIP 12UH (3225)
L125	1-412-203-11	s	MICRO INDUCTOR 560UH
L301	1-414-398-11	s	INDUCTOR (SMD) 10UH
L302	1-410-379-31	s	CHIP INDUCTOR 6.8UH (3225)
L303	1-410-380-31	s	INDUCTOR,CHIP 8.2UH (3225)
L304	1-414-398-11	s	INDUCTOR (SMD) 10UH
L305	1-410-379-31	s	CHIP INDUCTOR 6.8UH (3225)
L306	1-410-380-31	s	INDUCTOR,CHIP 8.2UH (3225)
L307	1-412-282-41	s	INDUCTOR INDACTOR 470UH (3225)
L308	1-412-282-41	s	INDUCTOR INDACTOR 470UH (3225)
L309	1-410-380-31	s	INDUCTOR,CHIP 8.2UH (3225)
L310	1-410-380-31	s	INDUCTOR,CHIP 8.2UH (3225)
L311	1-414-398-11	s	INDUCTOR (SMD) 10UH
L312	1-414-398-11	s	INDUCTOR (SMD) 10UH
L313	1-410-380-31	s	INDUCTOR,CHIP 8.2UH (3225)
L314	1-410-380-31	s	INDUCTOR,CHIP 8.2UH (3225)
L315	1-410-371-41	s	CHIP INDUCTOR 1.5UH
L316	1-410-371-41	s	CHIP INDUCTOR 1.5UH
L317	1-414-398-11	s	INDUCTOR (SMD) 10UH
L318	1-410-383-31	s	INDUCTOR,CHIP 15UH (3225)
L319	1-412-203-11	s	MICRO INDUCTOR 560UH
L501	1-414-400-11	s	INDUCTOR, 22UH
L502	1-414-400-11	s	INDUCTOR, 22UH
L503	1-412-282-41	s	INDUCTOR INDACTOR 470UH (3225)
L504	1-412-206-11	s	MICRO INDUCTOR 1MMH
L505	1-414-400-11	s	INDUCTOR, 22UH
L506	1-414-404-11	s	INDUCTOR (SMD) 100UH
L507	1-414-404-11	s	INDUCTOR (SMD) 100UH
L508	1-414-404-11	s	INDUCTOR (SMD) 100UH
L509	1-414-400-11	s	INDUCTOR, 22UH
L510	1-414-404-11	s	INDUCTOR (SMD) 100UH
L511	1-414-396-21	s	INDUCTOR (SMD) 4.7UH
L512	1-414-398-11	s	INDUCTOR (SMD) 10UH

(DM-114P BOARD)

Ref. No. or Q'ty	Part No.	SP	Description
L513	1-414-404-11	s	INDUCTOR (SMD) 100UH
L514	1-414-404-11	s	INDUCTOR (SMD) 100UH
L701	1-414-400-11	s	INDUCTOR, 22UH
L702	1-414-404-11	s	INDUCTOR (SMD) 100UH
L703	1-414-404-11	s	INDUCTOR (SMD) 100UH
L704	1-414-404-11	s	INDUCTOR (SMD) 100UH
L705	1-414-404-11	s	INDUCTOR (SMD) 100UH
L706	1-414-404-11	s	INDUCTOR (SMD) 100UH
L707	1-414-396-21	s	INDUCTOR (SMD) 4.7UH
L708	1-414-398-11	s	INDUCTOR (SMD) 10UH
L901	1-409-579-11	s	COIL, CHOKE 8.2UH
L902	1-409-579-11	s	COIL, CHOKE 8.2UH
L903	1-409-579-11	s	COIL, CHOKE 8.2UH
L904	1-409-579-11	s	COIL, CHOKE 8.2UH
L905	1-409-579-11	s	COIL, CHOKE 8.2UH
L906	1-409-579-11	s	COIL, CHOKE 8.2UH
L1101	1-412-193-11	s	MICRO INDUCTOR 68UH
L1102	1-414-400-11	s	INDUCTOR, 22UH
L1103	1-412-196-11	s	MICRO INDUCTOR 150UH
L1104	1-414-400-11	s	INDUCTOR, 22UH
L1105	1-414-400-11	s	INDUCTOR, 22UH
L1106	1-414-400-11	s	INDUCTOR, 22UH
L1201	1-414-400-11	s	INDUCTOR, 22UH
L1202	1-412-196-11	s	MICRO INDUCTOR 150UH
L1203	1-414-400-11	s	INDUCTOR, 22UH
L1204	1-414-400-11	s	INDUCTOR, 22UH
L1205	1 414 400 11	s	INDUCTOR, 22UH
L1301	1-414-402-11	s	INDUCTOR (SMD) 47UH
L1302	1-414-402-11	s	INDUCTOR (SMD) 47UH
L1303	1-412-280-31	s	CHIP INDUCTOR 330UH (3225)
L1304	1-412-204-11	s	MICRO INDUCTOR 680UH
L1305	1-414-402-11	s	INDUCTOR (SMD) 47UH
L1310	1-414-402-11	s	INDUCTOR (SMD) 47UH
L1401	1-410-391-11	s	CHIP INDUCTOR 68UH (3225)
L1402	1-414-402-11	s	INDUCTOR (SMD) 47UH
L1403	1-414-398-11	s	INDUCTOR (SMD) 10UH
L1501	1-414-402-11	s	INDUCTOR (SMD) 47UH
L1502	1-414-402-11	s	INDUCTOR (SMD) 47UH
L1503	1-410-393-11	s	CHIP INDUCTOR 100UH (3225)
L1504	1-410-658-31	s	INDUCTOR,CHIP 220UH (3225)
L1505	1-410-383-31	s	INDUCTOR,CHIP 15UH (3225)
L1506	1-410-387-11	s	CHIP INDUCTOR 33UH (3225)
L1507	1-414-402-11	s	INDUCTOR (SMD) 47UH
L1601	1-410-388-31	s	CHIP INDUCTOR 39UH
L1602	1-414-402-11	s	INDUCTOR (SMD) 47UH
L1603	1-414-398-11	s	INDUCTOR (SMD) 10UH
L1610	1-414-402-11	s	INDUCTOR (SMD) 47UH
L1701	1-414-400-11	s	INDUCTOR, 22UH
L1702	1-414-400-11	s	INDUCTOR, 22UH
L1801	1-414-400-11	s	INDUCTOR, 22UH
L1802	1-414-400-11	s	INDUCTOR, 22UH
L1803	1-410-392-11	s	CHIP INDUCTOR 82UH (3225)
L1804	1-410-392-11	s	CHIP INDUCTOR 82UH (3225)
L1805	1-414-400-11	s	INDUCTOR, 22UH
L1806	1-414-400-11	s	INDUCTOR, 22UH
L1807	1-414-400-11	s	INDUCTOR, 22UH
L1808	1-414-400-11	s	INDUCTOR, 22UH
L1810	1-410-803-11	s	CHIP INDUCTOR 0.047UH (3225)

(DM-114P BOARD)

Ref. No. or Q'ty	Part No.	SP	Description
LV1401	1-406-746-11	s	COIL, VARIABLE
LV1601	1-406-746-11	s	COIL, VARIABLE
Q101	8-729-117-73	s	TRANSISTOR 2SC4178-F14
Q102	8-729-117-73	s	TRANSISTOR 2SC4178-F14
Q103	8-729-013-37	s	TRANSISTOR 2SC4213-AB-TE85L
Q104	8-729-117-73	s	TRANSISTOR 2SC4178-F14
Q105	8-729-013-37	s	TRANSISTOR 2SC4213-AB-TE85L
Q106	8-729-117-73	s	TRANSISTOR 2SC4178-F14
Q107	8-729-117-73	s	TRANSISTOR 2SC4178-F14
Q108	8-729-028-91	s	TRANSISTOR DTA144EUA-T106
Q109	8-729-143-07	s	TRANSISTOR 2SA1610-Y33
Q110	8-729-117-73	s	TRANSISTOR 2SC4178-F14
Q111	8-729-117-73	s	TRANSISTOR 2SC4178-F14
Q112	8-729-117-73	s	TRANSISTOR 2SC4178-F14
Q113	8-729-028-91	s	TRANSISTOR DTA144EUA-T106
Q114	8-729-143-07	s	TRANSISTOR 2SA1610-Y33
Q115	8-729-117-73	s	TRANSISTOR 2SC4178-F14
Q116	8-729-028-91	s	TRANSISTOR DTA144EUA-T106
Q117	8-729-143-07	s	TRANSISTOR 2SA1610-Y33
Q118	8-729-117-73	s	TRANSISTOR 2SC4178-F14
Q119	8-729-117-73	s	TRANSISTOR 2SC4178-F14
Q120	8-729-117-73	s	TRANSISTOR 2SC4178-F14
Q121	8-729-117-73	s	TRANSISTOR 2SC4178-F14
Q122	8-729-117-73	s	TRANSISTOR 2SC4178-F14
Q123	8-729-143-07	s	TRANSISTOR 2SA1610-Y33
Q124	8-729-143-07	s	TRANSISTOR 2SA1610-Y33
Q125	8 729 117 73	s	TRANSISTOR 2SC4178 F14
Q126	8-729-117-73	s	TRANSISTOR 2SC4178-F14
Q127	8-729-117-73	s	TRANSISTOR 2SC4178-F14
Q128	8-729-117-73	s	TRANSISTOR 2SC4178-F14
Q129	8-729-143-07	s	TRANSISTOR 2SA1610-Y33
Q130	8-729-143-07	s	TRANSISTOR 2SA1610-Y33
Q131	8-729-117-73	s	TRANSISTOR 2SC4178-F14
Q132	8-729-117-73	s	TRANSISTOR 2SC4178-F14
Q133	8-729-117-73	s	TRANSISTOR 2SC4178-F14
Q134	8-729-117-73	s	TRANSISTOR 2SC4178-F14
Q135	8-729-117-32	s	TRANSISTOR 2SC4177
Q136	8-729-117-32	s	TRANSISTOR 2SC4177
Q137	8-729-140-63	s	TRANSISTOR 2SA1611-M5M6
Q138	8-729-117-73	s	TRANSISTOR 2SC4178-F14
Q139	8-729-143-07	s	TRANSISTOR 2SA1610-Y33
Q140	8-729-140-63	s	TRANSISTOR 2SA1611-M5M6
Q141	8-729-117-73	s	TRANSISTOR 2SC4178-F14
Q142	8-729-143-07	s	TRANSISTOR 2SA1610-Y33
Q143	8-729-140-63	s	TRANSISTOR 2SA1611-M5M6
Q301	8-729-117-73	s	TRANSISTOR 2SC4178-F14
Q302	8-729-117-73	s	TRANSISTOR 2SC4178-F14
Q303	8-729-117-73	s	TRANSISTOR 2SC4178-F14
Q304	8-729-117-73	s	TRANSISTOR 2SC4178-F14
Q305	8-729-117-73	s	TRANSISTOR 2SC4178-F14
Q306	8-729-117-73	s	TRANSISTOR 2SC4178-F14
Q307	8-729-117-73	s	TRANSISTOR 2SC4178-F14
Q308	8-729-117-73	s	TRANSISTOR 2SC4178-F14
Q309	8-729-117-73	s	TRANSISTOR 2SC4178-F14
Q310	8-729-143-07	s	TRANSISTOR 2SA1610-Y33
Q311	8-729-143-07	s	TRANSISTOR 2SA1610-Y33
Q312	8-729-117-73	s	TRANSISTOR 2SC4178-F14
Q313	8-729-117-73	s	TRANSISTOR 2SC4178-F14

(DM-114P BOARD)

Ref. No. or Q'ty	Part No.	SP	Description
Q314	8-729-143-07	s	TRANSISTOR 2SA1610-Y33
Q315	8-729-143-07	s	TRANSISTOR 2SA1610-Y33
Q316	8-729-117-73	s	TRANSISTOR 2SC4178-F14
Q317	8-729-117-73	s	TRANSISTOR 2SC4178-F14
Q318	8-729-117-73	s	TRANSISTOR 2SC4178-F14
Q319	8-729-117-73	s	TRANSISTOR 2SC4178-F14
Q320	8-729-117-73	s	TRANSISTOR 2SC4178-F14
Q321	8-729-117-32	s	TRANSISTOR 2SC4177
Q322	8-729-140-63	s	TRANSISTOR 2SA1611-M5M6
Q501	8-729-029-14	s	TRANSISTOR DTC144EUA-T106
Q502	8-729-029-14	s	TRANSISTOR DTC144EUA-T106
Q503	8-729-028-91	s	TRANSISTOR DTA144EUA-T106
Q504	8-729-028-91	s	TRANSISTOR DTA144EUA-T106
Q505	8-729-904-41	s	TRANSISTOR FMY3
Q506	8-729-904-41	s	TRANSISTOR FMY3
Q507	8-729-904-41	s	TRANSISTOR FMY3
Q508	8-729-904-41	s	TRANSISTOR FMY3
Q509	8-729-904-41	s	TRANSISTOR FMY3
Q510	8-729-140-63	s	TRANSISTOR 2SA1611-M5M6
Q511	8-729-117-32	s	TRANSISTOR 2SC4177
Q512	8-729-117-73	s	TRANSISTOR 2SC4178-F14
Q513	8-729-028-91	s	TRANSISTOR DTA144EUA-T106
Q514	8-729-117-32	s	TRANSISTOR 2SC4177
Q515	8-729-117-32	s	TRANSISTOR 2SC4177
Q516	8-729-117-32	s	TRANSISTOR 2SC4177
Q517	8-729-117-32	s	TRANSISTOR 2SC4177
Q518	8 729 117 32	s	TRANSISTOR 2SC4177
Q519	8-729-029-14	s	TRANSISTOR DTC144EUA-T106
Q520	8-729-117-32	s	TRANSISTOR 2SC4177
Q521	8-729-029-14	s	TRANSISTOR DTC144EUA-T106
Q522	8-729-117-32	s	TRANSISTOR 2SC4177
Q523	8-729-117-32	s	TRANSISTOR 2SC4177
Q524	8-729-117-32	s	TRANSISTOR 2SC4177
Q525	8-729-117-32	s	TRANSISTOR 2SC4177
Q526	8-729-117-32	s	TRANSISTOR 2SC4177
Q702	8-729-140-63	s	TRANSISTOR 2SA1611-M5M6
Q703	8-729-117-32	s	TRANSISTOR 2SC4177
Q704	8-729-140-63	s	TRANSISTOR 2SA1611-M5M6
Q705	8-729-117-32	s	TRANSISTOR 2SC4177
Q706	8-729-117-32	s	TRANSISTOR 2SC4177
Q707	8-729-140-63	s	TRANSISTOR 2SA1611-M5M6
Q708	8-729-140-63	s	TRANSISTOR 2SA1611-M5M6
Q709	8-729-117-32	s	TRANSISTOR 2SC4177
Q710	8-729-117-32	s	TRANSISTOR 2SC4177
Q711	8-729-117-73	s	TRANSISTOR 2SC4178-F14
Q712	8-729-028-91	s	TRANSISTOR DTA144EUA-T106
Q713	8-729-117-32	s	TRANSISTOR 2SC4177
Q714	8-729-117-32	s	TRANSISTOR 2SC4177
Q715	8-729-117-32	s	TRANSISTOR 2SC4177
Q716	8-729-029-14	s	TRANSISTOR DTC144EUA-T106
Q717	8-729-117-32	s	TRANSISTOR 2SC4177
Q718	8-729-029-14	s	TRANSISTOR DTC144EUA-T106
Q719	8-729-117-31	s	TRANSISTOR 2SC4177-L5
Q720	8-729-117-31	s	TRANSISTOR 2SC4177-L5
Q721	8-729-117-31	s	TRANSISTOR 2SC4177-L5
Q722	8-729-117-31	s	TRANSISTOR 2SC4177-L5
Q723	8-729-117-31	s	TRANSISTOR 2SC4177-L5
Q902	8-729-029-14	s	TRANSISTOR DTC144EUA-T106
Q903	8-729-029-14	s	TRANSISTOR DTC144EUA-T106

(DM-114P BOARD)

Ref. No. or Q'ty	Part No.	SP	Description
Q904	8-729-029-14	s	TRANSISTOR DTC144EUA-T106
Q905	8-729-106-60	s	TRANSISTOR 2SB1115A
Q906	8-729-106-68	s	TRANSISTOR 2SD1615A-GP
Q907	8-729-106-60	s	TRANSISTOR 2SB1115A
Q908	8-729-106-68	s	TRANSISTOR 2SD1615A-GP
Q909	8-729-106-60	s	TRANSISTOR 2SB1115A
Q910	8-729-106-68	s	TRANSISTOR 2SD1615A-GP
Q911	8-729-140-63	s	TRANSISTOR 2SA1611-M5M6
Q912	8-729-117-32	s	TRANSISTOR 2SC4177
Q913	8-729-140-63	s	TRANSISTOR 2SA1611-M5M6
Q914	8-729-117-32	s	TRANSISTOR 2SC4177
Q915	8-729-140-63	s	TRANSISTOR 2SA1611-M5M6
Q916	8-729-117-32	s	TRANSISTOR 2SC4177
Q917	8-729-028-91	s	TRANSISTOR DTA144EUA-T106
Q918	8-729-028-91	s	TRANSISTOR DTA144EUA-T106
Q919	8-729-028-91	s	TRANSISTOR DTA144EUA-T106
Q920	8-729-029-14	s	TRANSISTOR DTC144EUA-T106
Q921	8-729-029-14	s	TRANSISTOR DTC144EUA-T106
Q922	8-729-029-14	s	TRANSISTOR DTC144EUA-T106
Q1101	8-729-117-32	s	TRANSISTOR 2SC4177
Q1102	8-729-140-63	s	TRANSISTOR 2SA1611-M5M6
Q1103	8-729-117-32	s	TRANSISTOR 2SC4177
Q1104	8-729-140-63	s	TRANSISTOR 2SA1611-M5M6
Q1105	8-729-117-73	s	TRANSISTOR 2SC4178-F14
Q1106	8-729-907-26	s	TRANSISTOR IMX1
Q1107	8-729-904-04	s	TRANSISTOR FMS2
Q1108	8 729 029 14	s	TRANSISTOR DTC144EUA T106
Q1109	8-729-117-73	s	TRANSISTOR 2SC4178-F14
Q1110	8-729-907-26	s	TRANSISTOR IMX1
Q1111	8-729-140-63	s	TRANSISTOR 2SA1611-M5M6
Q1201	8-729-117-32	s	TRANSISTOR 2SC4177
Q1202	8-729-140-63	s	TRANSISTOR 2SA1611-M5M6
Q1203	8-729-117-32	s	TRANSISTOR 2SC4177
Q1204	8-729-140-63	s	TRANSISTOR 2SA1611-M5M6
Q1205	8-729-117-73	s	TRANSISTOR 2SC4178-F14
Q1206	8-729-907-26	s	TRANSISTOR IMX1
Q1207	8-729-904-04	s	TRANSISTOR FMS2
Q1208	8-729-117-73	s	TRANSISTOR 2SC4178-F14
Q1209	8-729-907-26	s	TRANSISTOR IMX1
Q1210	8-729-140-63	s	TRANSISTOR 2SA1611-M5M6
Q1301	8-729-907-26	s	TRANSISTOR IMX1
Q1302	8-729-117-32	s	TRANSISTOR 2SC4177
Q1401	8-729-140-63	s	TRANSISTOR 2SA1611-M5M6
Q1402	8-729-029-14	s	TRANSISTOR DTC144EUA-T106
Q1403	8-729-140-63	s	TRANSISTOR 2SA1611-M5M6
Q1404	8-729-140-63	s	TRANSISTOR 2SA1611-M5M6
Q1405	8-729-140-47	s	TRANSISTOR 2SC3735-L-B35
Q1406	8-729-140-63	s	TRANSISTOR 2SA1611-M5M6
Q1407	8-729-117-32	s	TRANSISTOR 2SC4177
Q1408	8-729-117-32	s	TRANSISTOR 2SC4177
Q1409	8-729-140-63	s	TRANSISTOR 2SA1611-M5M6
Q1410	8-729-117-32	s	TRANSISTOR 2SC4177
Q1411	8-729-117-32	s	TRANSISTOR 2SC4177
Q1412	8-729-117-32	s	TRANSISTOR 2SC4177
Q1501	8-729-907-26	s	TRANSISTOR IMX1
Q1502	8-729-117-32	s	TRANSISTOR 2SC4177
Q1601	8-729-140-63	s	TRANSISTOR 2SA1611-M5M6
Q1602	8-729-140-63	s	TRANSISTOR 2SA1611-M5M6
Q1603	8-729-140-63	s	TRANSISTOR 2SA1611-M5M6

http://getMANUAL.com

(DM-114P BOARD)

Ref. No. or Q'ty	Part No.	SP	Description
Q1604	8-729-140-47	s	TRANSISTOR 2SC3735-L-B35
Q1605	8-729-140-63	s	TRANSISTOR 2SA1611-M5M6
Q1606	8-729-117-32	s	TRANSISTOR 2SC4177
Q1607	8-729-117-32	s	TRANSISTOR 2SC4177
Q1608	8-729-140-63	s	TRANSISTOR 2SA1611-M5M6
Q1609	8-729-117-32	s	TRANSISTOR 2SC4177
Q1610	8-729-117-32	s	TRANSISTOR 2SC4177
Q1611	8-729-117-32	s	TRANSISTOR 2SC4177
Q1801	8-729-117-32	s	TRANSISTOR 2SC4177
Q1802	8-729-029-14	s	TRANSISTOR DTC144EUA-T106
Q1803	8-729-029-14	s	TRANSISTOR DTC144EUA-T106
Q1804	8-729-029-14	s	TRANSISTOR DTC144EUA-T106
Q1805	8-729-029-14	s	TRANSISTOR DTC144EUA-T106
R101	1-218-716-11	s	RESISTOR,CHIP 10K 1/16W(1608)
R102	1-218-716-11	s	RESISTOR,CHIP 10K 1/16W(1608)
R103	1-218-692-11	s	RESISTOR,CHIP 1.0K 1/16W(1608)
R104	1-218-692-11	s	RESISTOR,CHIP 1.0K 1/16W(1608)
R105	1-218-692-11	s	RESISTOR,CHIP 1.0K 1/16W(1608)
R106	1-218-671-11	s	RESISTOR,CHIP 130 1/16W (1608)
R107	1-218-670-11	s	RESISTOR,CHIP 120 1/16W (1608)
R108	1-218-665-11	s	RESISTOR CHIP 75 1/16W (1608)
R109	1-218-668-11	s	RESISTOR,CHIP 100 1/16W (1608)
R110	1-218-716-11	s	RESISTOR,CHIP 10K 1/16W(1608)
R111	1-218-668-11	s	RESISTOR,CHIP 100 1/16W (1608)
R116	1-218-692-11	s	RESISTOR,CHIP 1.0K 1/16W(1608)
R117	1-218-692-11	s	RESISTOR,CHIP 1.0K 1/16W(1608)
R118	1-218-724-11	s	RESISTOR,CHIP 22K 1/16W(1608)
R119	1-218-724-11	s	RESISTOR,CHIP 22K 1/16W(1608)
R120	1-218-692-11	s	RESISTOR,CHIP 1.0K 1/16W(1608)
R121	1-218-676-11	s	RESISTOR,CHIP 220 1/16W(1608)
R122	1-218-708-11	s	RESISTOR,CHIP 4.7K 1/16W(1608)
R123	1-218-692-11	s	RESISTOR,CHIP 1.0K 1/16W(1608)
R125	1-218-652-11	s	RESISTOR,CHIP 22 1/16W (1608)
R126	1-218-692-11	s	RESISTOR,CHIP 1.0K 1/16W(1608)
R127	1-218-692-11	s	RESISTOR,CHIP 1.0K 1/16W(1608)
R128	1-218-698-11	s	RESISTOR,CHIP 1.8K 1/16W(1608)
R129	1-218-692-11	s	RESISTOR,CHIP 1.0K 1/16W(1608)
R130	1-218-694-11	s	RESISTOR CHIP 1.2K1/16W(1608)
R131	1-218-700-11	s	RESISTOR,CHIP 2.2K 1/16W(1608)
R132	1-218-680-11	s	RESISTOR,CHIP 330 1/16W(1608)
R133	1-218-680-11	s	RESISTOR,CHIP 330 1/16W(1608)
R134	1-218-679-91	s	RESISTOR,METAL FILM 300 1/16W
R135	1-218-716-11	s	RESISTOR,CHIP 10K 1/16W(1608)
R136	1-218-708-11	s	RESISTOR,CHIP 4.7K 1/16W(1608)
R137	1-218-708-11	s	RESISTOR,CHIP 4.7K 1/16W(1608)
R138	1-218-716-11	s	RESISTOR,CHIP 10K 1/16W(1608)
R139	1-218-668-11	s	RESISTOR,CHIP 100 1/16W (1608)
R140	1-218-679-91	s	RESISTOR,METAL FILM 300 1/16W
R141	1-218-708-11	s	RESISTOR,CHIP 4.7K 1/16W(1608)
R142	1-218-716-11	s	RESISTOR,CHIP 10K 1/16W(1608)
R143	1-218-668-11	s	RESISTOR,CHIP 100 1/16W (1608)
R144	1-218-716-11	s	RESISTOR,CHIP 10K 1/16W(1608)
R145	1-218-700-11	s	RESISTOR,CHIP 2.2K 1/16W(1608)
R146	1-218-665-11	s	RESISTOR CHIP 75 1/16W (1608)
R147	1-218-708-11	s	RESISTOR,CHIP 4.7K 1/16W(1608)
R148	1-218-668-11	s	RESISTOR,CHIP 100 1/16W (1608)
R149	1-218-668-11	s	RESISTOR,CHIP 100 1/16W (1608)
R150	1-218-684-11	s	RESISTOR CHIP 470 1/16W (1608)

(DM-114P BOARD)

Ref. No. or Q'ty	Part No.	SP	Description
R151	1-218-668-11	s	RESISTOR,CHIP 100 1/16W (1608)
R153	1-218-692-11	s	RESISTOR,CHIP 1.0K 1/16W(1608)
R154	1-218-716-11	s	RESISTOR,CHIP 10K 1/16W(1608)
R155	1-218-716-11	s	RESISTOR,CHIP 10K 1/16W(1608)
R156	1-218-708-11	s	RESISTOR,CHIP 4.7K 1/16W(1608)
R157	1-218-668-11	s	RESISTOR,CHIP 100 1/16W (1608)
R158	1-218-704-11	s	RESISTOR,CHIP 3.3K 1/16W(1608)
R159	1-218-704-11	s	RESISTOR,CHIP 3.3K 1/16W(1608)
R160	1-218-679-91	s	RESISTOR,METAL FILM 300 1/16W
R161	1-218-680-11	s	RESISTOR,CHIP 330 1/16W(1608)
R162	1-218-716-11	s	RESISTOR,CHIP 10K 1/16W(1608)
R163	1-218-668-11	s	RESISTOR,CHIP 100 1/16W (1608)
R164	1-218-716-11	s	RESISTOR,CHIP 10K 1/16W(1608)
R165	1-218-668-11	s	RESISTOR,CHIP 100 1/16W (1608)
R166	1-218-708-11	s	RESISTOR,CHIP 4.7K 1/16W(1608)
R167	1-218-668-11	s	RESISTOR,CHIP 100 1/16W (1608)
R168	1-218-679-91	s	RESISTOR,METAL FILM 300 1/16W
R169	1-218-668-11	s	RESISTOR,CHIP 100 1/16W (1608)
R170	1-218-680-11	s	RESISTOR,CHIP 330 1/16W(1608)
R171	1-218-692-11	s	RESISTOR,CHIP 1.0K 1/16W(1608)
R172	1-218-708-11	s	RESISTOR,CHIP 4.7K 1/16W(1608)
R173	1-218-708-11	s	RESISTOR,CHIP 4.7K 1/16W(1608)
R174	1-218-679-91	s	RESISTOR,METAL FILM 300 1/16W
R175	1-218-716-11	s	RESISTOR,CHIP 10K 1/16W(1608)
R176	1-218-668-11	s	RESISTOR,CHIP 100 1/16W (1608)
R177	1-218-668-11	s	RESISTOR,CHIP 100 1/16W (1608)
R178	1-218-676-11	s	RESISTOR,CHIP 220 1/16W(1608)
R179	1-218-685-11	s	RESISTOR,METAL FILM 510 1/16W
R180	1-218-683-11	s	RESISTOR CHIP 430 1/16W (1608)
R181	1-218-684-11	s	RESISTOR CHIP 470 1/16W (1608)
R182	1-218-676-11	s	RESISTOR,CHIP 220 1/16W(1608)
R183	1-218-685-11	s	RESISTOR,METAL FILM 510 1/16W
R184	1-218-683-11	s	RESISTOR CHIP 430 1/16W (1608)
R185	1-218-684-11	s	RESISTOR CHIP 470 1/16W (1608)
R186	1-218-676-11	s	RESISTOR,CHIP 220 1/16W(1608)
R187	1-218-692-11	s	RESISTOR,CHIP 1.0K 1/16W(1608)
R188	1-218-676-11	s	RESISTOR,CHIP 220 1/16W(1608)
R189	1-218-668-11	s	RESISTOR,CHIP 100 1/16W (1608)
R190	1-218-668-11	s	RESISTOR,CHIP 100 1/16W (1608)
R191	1-218-708-11	s	RESISTOR,CHIP 4.7K 1/16W(1608)
R192	1-218-668-11	s	RESISTOR,CHIP 100 1/16W (1608)
R193	1-218-708-11	s	RESISTOR,CHIP 4.7K 1/16W(1608)
R194	1-218-668-11	s	RESISTOR,CHIP 100 1/16W (1608)
R195	1-218-668-11	s	RESISTOR,CHIP 100 1/16W (1608)
R196	1-218-676-11	s	RESISTOR,CHIP 220 1/16W(1608)
R197	1-218-685-11	s	RESISTOR,METAL FILM 510 1/16W
R198	1-218-682-11	s	RESISTOR CHIP 390 1/16W (1608)
R199	1-218-684-11	s	RESISTOR CHIP 470 1/16W (1608)
R200	1-218-676-11	s	RESISTOR,CHIP 220 1/16W(1608)
R201	1-218-685-11	s	RESISTOR,METAL FILM 510 1/16W
R202	1-218-681-11	s	RESISTOR CHIP 360 1/16W (1608)
R203	1-218-684-11	s	RESISTOR CHIP 470 1/16W (1608)
R204	1-218-676-11	s	RESISTOR,CHIP 220 1/16W(1608)
R205	1-218-676-11	s	RESISTOR,CHIP 220 1/16W(1608)
R206	1-218-700-11	s	RESISTOR,CHIP 2.2K 1/16W(1608)
R207	1-218-668-11	s	RESISTOR,CHIP 100 1/16W (1608)
R208	1-218-668-11	s	RESISTOR,CHIP 100 1/16W (1608)
R209	1-218-708-11	s	RESISTOR,CHIP 4.7K 1/16W(1608)
R210	1-218-708-11	s	RESISTOR,CHIP 4.7K 1/16W(1608)

(DM-114P BOARD)

Ref. No. or Q'ty	Part No.	SP	Description
R211	1-218-716-11	s	RESISTOR,CHIP 10K 1/16W(1608)
R212	1-218-716-11	s	RESISTOR,CHIP 10K 1/16W(1608)
R213	1-218-676-11	s	RESISTOR,CHIP 220 1/16W(1608)
R214	1-218-680-11	s	RESISTOR,CHIP 330 1/16W(1608)
R215	1-218-680-11	s	RESISTOR,CHIP 330 1/16W(1608)
R216	1-218-708-11	s	RESISTOR,CHIP 4.7K 1/16W(1608)
R217	1-218-708-11	s	RESISTOR,CHIP 4.7K 1/16W(1608)
R218	1-218-692-11	s	RESISTOR,CHIP 1.0K 1/16W(1608)
R219	1-218-692-11	s	RESISTOR,CHIP 1.0K 1/16W(1608)
R220	1-218-652-11	s	RESISTOR,CHIP 22 1/16W (1608)
R221	1-218-652-11	s	RESISTOR,CHIP 22 1/16W (1608)
R222	1-218-716-11	s	RESISTOR,CHIP 10K 1/16W(1608)
R223	1-218-680-11	s	RESISTOR,CHIP 330 1/16W(1608)
R224	1-218-685-11	s	RESISTOR,METAL FILM 510 1/16W
R225	1-218-685-11	s	RESISTOR,METAL FILM 510 1/16W
R228	1-218-680-11	s	RESISTOR,CHIP 330 1/16W(1608)
R229	1-218-680-11	s	RESISTOR,CHIP 330 1/16W(1608)
R230	1-218-708-11	s	RESISTOR,CHIP 4.7K 1/16W(1608)
R231	1-218-708-11	s	RESISTOR,CHIP 4.7K 1/16W(1608)
R233	1-216-853-11	s	RESISTOR,CHIP 470K 1/16W(1608)
R234	1-218-716-11	s	RESISTOR,CHIP 10K 1/16W(1608)
R235	1-218-686-11	s	RESISTOR CHIP 560 1/16W (1608)
R236	1-218-692-11	s	RESISTOR,CHIP 1.0K 1/16W(1608)
R237	1-218-700-11	s	RESISTOR,CHIP 2.2K 1/16W(1608)
R238	1-218-684-11	s	RESISTOR CHIP 470 1/16W (1608)
R239	1-218-720-11	s	RESISTOR,CHIP 15K 1/16W(1608)
R240	1 218 728 11	s	RESISTOR,METAL 33K 1/16W
R241	1-218-692-11	s	RESISTOR,CHIP 1.0K 1/16W(1608)
R242	1-218-716-11	s	RESISTOR,CHIP 10K 1/16W(1608)
R243	1-218-708-11	s	RESISTOR,CHIP 4.7K 1/16W(1608)
R244	1-218-692-11	s	RESISTOR,CHIP 1.0K 1/16W(1608)
R245	1-218-694-11	s	RESISTOR CHIP 1.2K1/16W(1608)
R246	1-218-708-11	s	RESISTOR,CHIP 4.7K 1/16W(1608)
R247	1-218-716-11	s	RESISTOR,CHIP 10K 1/16W(1608)
R248	1-218-716-11	s	RESISTOR,CHIP 10K 1/16W(1608)
R249	1-218-692-11	s	RESISTOR,CHIP 1.0K 1/16W(1608)
R250	1-218-692-11	s	RESISTOR,CHIP 1.0K 1/16W(1608)
R251	1-218-706-11	s	RESISTOR,CHIP 3.9K 1/16W(1608)
R252	1-218-692-11	s	RESISTOR,CHIP 1.0K 1/16W(1608)
R253	1-218-732-11	s	RESISTOR,CHIP 47K 1/16W(1608)
R254	1-218-716-11	s	RESISTOR,CHIP 10K 1/16W(1608)
R255	1-218-724-11	s	RESISTOR,CHIP 22K 1/16W(1608)
R256	1-218-676-11	s	RESISTOR,CHIP 220 1/16W(1608)
R257	1-218-724-11	s	RESISTOR,CHIP 22K 1/16W(1608)
R258	1-218-716-11	s	RESISTOR,CHIP 10K 1/16W(1608)
R259	1-218-716-11	s	RESISTOR,CHIP 10K 1/16W(1608)
R260	1-218-716-11	s	RESISTOR,CHIP 10K 1/16W(1608)
R261	1-218-692-11	s	RESISTOR,CHIP 1.0K 1/16W(1608)
R262	1-218-724-11	s	RESISTOR,CHIP 22K 1/16W(1608)
R263	1-218-692-11	s	RESISTOR,CHIP 1.0K 1/16W(1608)
R264	1-218-716-11	s	RESISTOR,CHIP 10K 1/16W(1608)
R265	1-218-692-11	s	RESISTOR,CHIP 1.0K 1/16W(1608)
R266	1-218-706-11	s	RESISTOR,CHIP 3.9K 1/16W(1608)
R267	1-218-676-11	s	RESISTOR,CHIP 220 1/16W(1608)
R268	1-218-692-11	s	RESISTOR,CHIP 1.0K 1/16W(1608)
R269	1-218-716-11	s	RESISTOR,CHIP 10K 1/16W(1608)
R270	1-218-668-11	s	RESISTOR,CHIP 100 1/16W (1608)
R271	1-218-668-11	s	RESISTOR,CHIP 100 1/16W (1608)
R272	1-218-692-11	s	RESISTOR,CHIP 1.0K 1/16W(1608)

(DM-114P BOARD)

Ref. No. or Q'ty	Part No.	SP	Description
R273	1-218-740-11	s	RESISTOR,CHIP 100K 1/16W(1608)
R274	1-216-864-11	s	RESISTOR,CHIP 0 1/16W (1608)
R275	1-216-864-11	s	RESISTOR,CHIP 0 1/16W (1608)
R301	1-218-671-11	s	RESISTOR,CHIP 130 1/16W (1608)
R302	1-218-670-11	s	RESISTOR,CHIP 120 1/16W (1608)
R303	1-218-665-11	s	RESISTOR CHIP 75 1/16W (1608)
R304	1-218-664-11	s	RESISTOR,CHIP 68 1/16W (1608)
R305	1-218-700-11	s	RESISTOR,CHIP 2.2K 1/16W(1608)
R306	1-218-732-11	s	RESISTOR,CHIP 47K 1/16W(1608)
R307	1-218-668-11	s	RESISTOR,CHIP 100 1/16W (1608)
R308	1-216-857-11	s	RESISTOR,CHIP 1.0M 1/16W 1608
R309	1-218-716-11	s	RESISTOR,CHIP 10K 1/16W(1608)
R310	1-218-732-11	s	RESISTOR,CHIP 47K 1/16W(1608)
R311	1-218-716-11	s	RESISTOR,CHIP 10K 1/16W(1608)
R312	1-216-857-11	s	RESISTOR,CHIP 1.0M 1/16W 1608
R313	1-218-668-11	s	RESISTOR,CHIP 100 1/16W (1608)
R316	1-218-716-11	s	RESISTOR,CHIP 10K 1/16W(1608)
R317	1-218-700-11	s	RESISTOR,CHIP 2.2K 1/16W(1608)
R318	1-218-664-11	s	RESISTOR,CHIP 68 1/16W (1608)
R319	1-218-692-11	s	RESISTOR,CHIP 1.0K 1/16W(1608)
R320	1-218-692-11	s	RESISTOR,CHIP 1.0K 1/16W(1608)
R321	1-218-676-11	s	RESISTOR,CHIP 220 1/16W(1608)
R322	1-218-706-11	s	RESISTOR,CHIP 3.9K 1/16W(1608)
R323	1-218-692-11	s	RESISTOR,CHIP 1.0K 1/16W(1608)
R324	1-218-724-11	s	RESISTOR,CHIP 22K 1/16W(1608)
R325	1-218-724-11	s	RESISTOR,CHIP 22K 1/16W(1608)
R326	1 218 692 11	s	RESISTOR,CHIP 1.0K 1/16W(1608)
R328	1-218-680-11	s	RESISTOR,CHIP 330 1/16W(1608)
R329	1-218-680-11	s	RESISTOR,CHIP 330 1/16W(1608)
R330	1-218-708-11	s	RESISTOR,CHIP 4.7K 1/16W(1608)
R331	1-218-708-11	s	RESISTOR,CHIP 4.7K 1/16W(1608)
R332	1-218-700-11	s	RESISTOR,CHIP 2.2K 1/16W(1608)
R333	1-218-665-11	s	RESISTOR CHIP 75 1/16W (1608)
R334	1-218-668-11	s	RESISTOR,CHIP 100 1/16W (1608)
R335	1-218-684-11	s	RESISTOR CHIP 470 1/16W (1608)
R337	1-218-692-11	s	RESISTOR,CHIP 1.0K 1/16W(1608)
R338	1-218-704-11	s	RESISTOR,CHIP 3.3K 1/16W(1608)
R339	1-218-704-11	s	RESISTOR,CHIP 3.3K 1/16W(1608)
R340	1-218-679-91	s	RESISTOR,METAL FILM 300 1/16W
R341	1-218-679-91	s	RESISTOR,METAL FILM 300 1/16W
R342	1-218-679-91	s	RESISTOR,METAL FILM 300 1/16W
R343	1-218-668-11	s	RESISTOR,CHIP 100 1/16W (1608)
R344	1-218-679-91	s	RESISTOR,METAL FILM 300 1/16W
R345	1-218-668-11	s	RESISTOR,CHIP 100 1/16W (1608)
R346	1-218-708-11	s	RESISTOR,CHIP 4.7K 1/16W(1608)
R347	1-218-684-11	s	RESISTOR CHIP 470 1/16W (1608)
R348	1-218-708-11	s	RESISTOR,CHIP 4.7K 1/16W(1608)
R349	1-218-668-11	s	RESISTOR,CHIP 100 1/16W (1608)
R350	1-218-676-11	s	RESISTOR,CHIP 220 1/16W(1608)
R351	1-218-685-11	s	RESISTOR,METAL FILM 510 1/16W
R352	1-218-683-11	s	RESISTOR CHIP 430 1/16W (1608)
R353	1-218-684-11	s	RESISTOR CHIP 470 1/16W (1608)
R354	1-218-676-11	s	RESISTOR,CHIP 220 1/16W(1608)
R355	1-218-684-11	s	RESISTOR CHIP 470 1/16W (1608)
R356	1-218-682-11	s	RESISTOR CHIP 390 1/16W (1608)
R357	1-218-684-11	s	RESISTOR CHIP 470 1/16W (1608)
R358	1-218-676-11	s	RESISTOR,CHIP 220 1/16W(1608)
R360	1-218-676-11	s	RESISTOR,CHIP 220 1/16W(1608)
R361	1-218-668-11	s	RESISTOR,CHIP 100 1/16W (1608)

(DM-114P BOARD)

Ref. No. or Q'ty	Part No.	SP	Description
R362	1-218-668-11	s	RESISTOR,CHIP 100 1/16W (1608)
R363	1-218-708-11	s	RESISTOR,CHIP 4.7K 1/16W(1608)
R364	1-218-668-11	s	RESISTOR,CHIP 100 1/16W (1608)
R365	1-218-708-11	s	RESISTOR,CHIP 4.7K 1/16W(1608)
R366	1-218-668-11	s	RESISTOR,CHIP 100 1/16W (1608)
R367	1-218-676-11	s	RESISTOR,CHIP 220 1/16W(1608)
R368	1-218-685-11	s	RESISTOR,METAL FILM 510 1/16W
R369	1-218-682-11	s	RESISTOR CHIP 390 1/16W (1608)
R370	1-218-684-11	s	RESISTOR CHIP 470 1/16W (1608)
R371	1-218-676-11	s	RESISTOR,CHIP 220 1/16W(1608)
R372	1-218-685-11	s	RESISTOR,METAL FILM 510 1/16W
R373	1-218-681-11	s	RESISTOR CHIP 360 1/16W (1608)
R374	1-218-684-11	s	RESISTOR CHIP 470 1/16W (1608)
R375	1-218-676-11	s	RESISTOR,CHIP 220 1/16W(1608)
R376	1-218-676-11	s	RESISTOR,CHIP 220 1/16W(1608)
R377	1-218-668-11	s	RESISTOR,CHIP 100 1/16W (1608)
R378	1-218-668-11	s	RESISTOR,CHIP 100 1/16W (1608)
R379	1-218-708-11	s	RESISTOR,CHIP 4.7K 1/16W(1608)
R380	1-218-708-11	s	RESISTOR,CHIP 4.7K 1/16W(1608)
R381	1-218-716-11	s	RESISTOR,CHIP 10K 1/16W(1608)
R382	1-218-676-11	s	RESISTOR,CHIP 220 1/16W(1608)
R383	1-218-680-11	s	RESISTOR,CHIP 330 1/16W(1608)
R384	1-218-680-11	s	RESISTOR,CHIP 330 1/16W(1608)
R385	1-218-708-11	s	RESISTOR,CHIP 4.7K 1/16W(1608)
R386	1-218-708-11	s	RESISTOR,CHIP 4.7K 1/16W(1608)
R387	1-218-692-11	s	RESISTOR,CHIP 1.0K 1/16W(1608)
R388	1 218 652 11	s	RESISTOR,CHIP 22 1/16W (1608)
R389	1-218-652-11	s	RESISTOR,CHIP 22 1/16W (1608)
R390	1-218-692-11	s	RESISTOR,CHIP 1.0K 1/16W(1608)
R391	1-218-680-11	s	RESISTOR,CHIP 330 1/16W(1608)
R392	1-218-685-11	s	RESISTOR,METAL FILM 510 1/16W
R393	1-218-685-11	s	RESISTOR,METAL FILM 510 1/16W
R396	1-218-680-11	s	RESISTOR,CHIP 330 1/16W(1608)
R397	1-218-680-11	s	RESISTOR,CHIP 330 1/16W(1608)
R399	1-216-853-11	s	RESISTOR,CHIP 470K 1/16W(1608)
R400	1-218-708-11	s	RESISTOR,CHIP 4.7K 1/16W(1608)
R401	1-218-708-11	s	RESISTOR,CHIP 4.7K 1/16W(1608)
R402	1-218-700-11	s	RESISTOR,CHIP 2.2K 1/16W(1608)
R403	1-218-684-11	s	RESISTOR CHIP 470 1/16W (1608)
R404	1-218-692-11	s	RESISTOR,CHIP 1.0K 1/16W(1608)
R405	1-218-694-11	s	RESISTOR CHIP 1.2K1/16W(1608)
R406	1-218-720-11	s	RESISTOR,CHIP 15K 1/16W(1608)
R407	1-218-728-11	s	RESISTOR,METAL 33K 1/16W
R408	1-218-716-11	s	RESISTOR,CHIP 10K 1/16W(1608)
R409	1-218-708-11	s	RESISTOR,CHIP 4.7K 1/16W(1608)
R410	1-218-692-11	s	RESISTOR,CHIP 1.0K 1/16W(1608)
R411	1-218-708-11	s	RESISTOR,CHIP 4.7K 1/16W(1608)
R412	1-218-716-11	s	RESISTOR,CHIP 10K 1/16W(1608)
R413	1-218-692-11	s	RESISTOR,CHIP 1.0K 1/16W(1608)
R414	1-218-732-11	s	RESISTOR,CHIP 47K 1/16W(1608)
R415	1-218-716-11	s	RESISTOR,CHIP 10K 1/16W(1608)
R416	1-218-724-11	s	RESISTOR,CHIP 22K 1/16W(1608)
R417	1-218-724-11	s	RESISTOR,CHIP 22K 1/16W(1608)
R418	1-218-716-11	s	RESISTOR,CHIP 10K 1/16W(1608)
R419	1-218-724-11	s	RESISTOR,CHIP 22K 1/16W(1608)
R420	1-218-716-11	s	RESISTOR,CHIP 10K 1/16W(1608)
R421	1-218-692-11	s	RESISTOR,CHIP 1.0K 1/16W(1608)
R422	1-218-740-11	s	RESISTOR,CHIP 100K 1/16W(1608)
R423	1-216-864-11	s	RESISTOR,CHIP 0 1/16W (1608)

(DM-114P BOARD)

Ref. No. or Q'ty	Part No.	SP	Description
R424	1-218-668-11	s	RESISTOR,CHIP 100 1/16W (1608)
R425	1-218-692-11	s	RESISTOR,CHIP 1.0K 1/16W(1608)
R501	1-218-740-11	s	RESISTOR,CHIP 100K 1/16W(1608)
R502	1-218-716-11	s	RESISTOR,CHIP 10K 1/16W(1608)
R503	1-218-732-11	s	RESISTOR,CHIP 47K 1/16W(1608)
R504	1-218-716-11	s	RESISTOR,CHIP 10K 1/16W(1608)
R505	1-218-716-11	s	RESISTOR,CHIP 10K 1/16W(1608)
R506	1-218-708-11	s	RESISTOR,CHIP 4.7K 1/16W(1608)
R507	1-218-716-11	s	RESISTOR,CHIP 10K 1/16W(1608)
R508	1-218-716-11	s	RESISTOR,CHIP 10K 1/16W(1608)
R510	1-218-716-11	s	RESISTOR,CHIP 10K 1/16W(1608)
R511	1-218-716-11	s	RESISTOR,CHIP 10K 1/16W(1608)
R512	1-218-716-11	s	RESISTOR,CHIP 10K 1/16W(1608)
R513	1-218-716-11	s	RESISTOR,CHIP 10K 1/16W(1608)
R514	1-218-716-11	s	RESISTOR,CHIP 10K 1/16W(1608)
R515	1-218-716-11	s	RESISTOR,CHIP 10K 1/16W(1608)
R517	1-218-691-11	s	RESISTOR CHIP 910 1/16W (1608)
R518	1-218-692-11	s	RESISTOR,CHIP 1.0K 1/16W(1608)
R519	1-218-692-11	s	RESISTOR,CHIP 1.0K 1/16W(1608)
R521	1-216-864-11	s	RESISTOR,CHIP 0 1/16W (1608)
R522	1-218-732-11	s	RESISTOR,CHIP 47K 1/16W(1608)
R523	1-218-726-11	s	RESISTOR CHIP 27K 1/16W (1608)
R524	1-218-732-11	s	RESISTOR,CHIP 47K 1/16W(1608)
R525	1-216-853-11	s	RESISTOR,CHIP 470K 1/16W(1608)
R526	1-216-853-11	s	RESISTOR,CHIP 470K 1/16W(1608)
R527	1-218-708-11	s	RESISTOR,CHIP 4.7K 1/16W(1608)
R528	1 218 726 11	s	RESISTOR CHIP 27K 1/16W (1608)
R529	1-218-668-11	s	RESISTOR,CHIP 100 1/16W (1608)
R530	1-218-711-11	s	RESISTOR,METAL 6.2K 1/16W
R531	1-218-676-11	s	RESISTOR,CHIP 220 1/16W(1608)
R532	1-218-676-11	s	RESISTOR,CHIP 220 1/16W(1608)
R533	1-218-668-11	s	RESISTOR,CHIP 100 1/16W (1608)
R534	1-218-675-11	s	RESISTOR,CHIP 200 1/16W (1608)
R535	1-218-706-11	s	RESISTOR,CHIP 3.9K 1/16W(1608)
R537	1-218-721-11	s	RESISTOR,CHIP 16K 1/16W(1608)
R538	1-218-694-11	s	RESISTOR CHIP 1.2K1/16W(1608)
R539	1-218-692-11	s	RESISTOR,CHIP 1.0K 1/16W(1608)
R540	1-218-652-11	s	RESISTOR,CHIP 22 1/16W (1608)
R541	1-218-692-11	s	RESISTOR,CHIP 1.0K 1/16W(1608)
R542	1-218-716-11	s	RESISTOR,CHIP 10K 1/16W(1608)
R543	1-218-708-11	s	RESISTOR,CHIP 4.7K 1/16W(1608)
R544	1-218-652-11	s	RESISTOR,CHIP 22 1/16W (1608)
R545	1-218-684-11	s	RESISTOR CHIP 470 1/16W (1608)
R546	1-218-684-11	s	RESISTOR CHIP 470 1/16W (1608)
R548	1-218-724-11	s	RESISTOR,CHIP 22K 1/16W(1608)
R549	1-218-723-11	s	RESISTOR,CHIP 20K 1/16W(1608)
R550	1-218-721-11	s	RESISTOR,CHIP 16K 1/16W(1608)
R551	1-218-680-11	s	RESISTOR,CHIP 330 1/16W(1608)
R552	1-218-692-11	s	RESISTOR,CHIP 1.0K 1/16W(1608)
R553	1-218-692-11	s	RESISTOR,CHIP 1.0K 1/16W(1608)
R555	1-218-684-11	s	RESISTOR CHIP 470 1/16W (1608)
R556	1-218-684-11	s	RESISTOR CHIP 470 1/16W (1608)
R557	1-218-721-11	s	RESISTOR,CHIP 16K 1/16W(1608)
R559	1-218-680-11	s	RESISTOR,CHIP 330 1/16W(1608)
R560	1-218-699-11	s	RESISTOR CHIP 2.0K 1/16W(1608)
R561	1-218-699-11	s	RESISTOR CHIP 2.0K 1/16W(1608)
R563	1-218-692-11	s	RESISTOR,CHIP 1.0K 1/16W(1608)
R564	1-218-692-11	s	RESISTOR,CHIP 1.0K 1/16W(1608)
R565	1-218-699-11	s	RESISTOR CHIP 2.0K 1/16W(1608)

(DM-114P BOARD)

Ref. No. or Q'ty	Part No.	SP	Description
R566	1-218-699-11	s	RESISTOR CHIP 2.0K 1/16W(1608)
R568	1-218-692-11	s	RESISTOR,CHIP 1.0K 1/16W(1608)
R569	1-218-692-11	s	RESISTOR,CHIP 1.0K 1/16W(1608)
R571	1-218-740-11	s	RESISTOR,CHIP 100K 1/16W(1608)
R572	1-218-668-11	s	RESISTOR,CHIP 100 1/16W (1608)
R573	1-218-692-11	s	RESISTOR,CHIP 1.0K 1/16W(1608)
R574	1-218-684-11	s	RESISTOR CHIP 470 1/16W (1608)
R575	1-218-708-11	s	RESISTOR,CHIP 4.7K 1/16W(1608)
R576	1-218-692-11	s	RESISTOR,CHIP 1.0K 1/16W(1608)
R577	1-218-722-11	s	RESISTOR,CHIP 18K 1/16W 1608
R578	1-218-707-11	s	RESISTOR,CHIP 4.3K 1/16W(1608)
R579	1-218-708-11	s	RESISTOR,CHIP 4.7K 1/16W(1608)
R580	1-218-716-11	s	RESISTOR,CHIP 10K 1/16W(1608)
R581	1-218-732-11	s	RESISTOR,CHIP 47K 1/16W(1608)
R582	1-218-716-11	s	RESISTOR,CHIP 10K 1/16W(1608)
R583	1-218-661-11	s	RESISTOR,CHIP 51 1/16W (1608)
R584	1-218-716-11	s	RESISTOR,CHIP 10K 1/16W(1608)
R586	1-218-684-11	s	RESISTOR CHIP 470 1/16W (1608)
R587	1-218-692-11	s	RESISTOR,CHIP 1.0K 1/16W(1608)
R588	1-218-652-11	s	RESISTOR,CHIP 22 1/16W (1608)
R589	1-218-652-11	s	RESISTOR,CHIP 22 1/16W (1608)
R590	1-218-679-91	s	RESISTOR,METAL FILM 300 1/16W
R591	1-218-692-11	s	RESISTOR,CHIP 1.0K 1/16W(1608)
R592	1-218-684-11	s	RESISTOR CHIP 470 1/16W (1608)
R593	1-218-700-11	s	RESISTOR,CHIP 2.2K 1/16W(1608)
R594	1-218-679-91	s	RESISTOR,METAL FILM 300 1/16W
R596	1 218 652 11	s	RESISTOR,CHIP 22 1/16W (1608)
R597	1-218-652-11	s	RESISTOR,CHIP 22 1/16W (1608)
R598	1-218-700-11	s	RESISTOR,CHIP 2.2K 1/16W(1608)
R599	1-218-700-11	s	RESISTOR,CHIP 2.2K 1/16W(1608)
R600	1-218-700-11	s	RESISTOR,CHIP 2.2K 1/16W(1608)
R601	1-218-716-11	s	RESISTOR,CHIP 10K 1/16W(1608)
R602	1-218-716-11	s	RESISTOR,CHIP 10K 1/16W(1608)
R603	1-218-692-11	s	RESISTOR,CHIP 1.0K 1/16W(1608)
R604	1-218-692-11	s	RESISTOR,CHIP 1.0K 1/16W(1608)
R605	1-218-716-11	s	RESISTOR,CHIP 10K 1/16W(1608)
R606	1-218-716-11	s	RESISTOR,CHIP 10K 1/16W(1608)
R607	1-218-716-11	s	RESISTOR,CHIP 10K 1/16W(1608)
R608	1-218-716-11	s	RESISTOR,CHIP 10K 1/16W(1608)
R609	1-218-719-11	s	RESISTOR,METAL 13K 1/16
R610	1-218-698-11	s	RESISTOR,CHIP 1.8K 1/16W(1608)
R611	1-218-692-11	s	RESISTOR,CHIP 1.0K 1/16W(1608)
R612	1-218-716-11	s	RESISTOR,CHIP 10K 1/16W(1608)
R613	1-218-684-11	s	RESISTOR CHIP 470 1/16W (1608)
R614	1-218-668-11	s	RESISTOR,CHIP 100 1/16W (1608)
R615	1-218-668-11	s	RESISTOR,CHIP 100 1/16W (1608)
R616	1-218-708-11	s	RESISTOR,CHIP 4.7K 1/16W(1608)
R617	1-218-668-11	s	RESISTOR,CHIP 100 1/16W (1608)
R618	1-218-692-11	s	RESISTOR,CHIP 1.0K 1/16W(1608)
R619	1-218-692-11	s	RESISTOR,CHIP 1.0K 1/16W(1608)
R620	1-218-692-11	s	RESISTOR,CHIP 1.0K 1/16W(1608)
R621	1-218-692-11	s	RESISTOR,CHIP 1.0K 1/16W(1608)
R622	1-218-684-11	s	RESISTOR CHIP 470 1/16W (1608)
R623	1-218-684-11	s	RESISTOR CHIP 470 1/16W (1608)
R624	1-218-692-11	s	RESISTOR,CHIP 1.0K 1/16W(1608)
R625	1-218-690-11	s	RESISTOR CHIP 820 1/16W (1608)
R626	1-218-690-11	s	RESISTOR CHIP 820 1/16W (1608)
R627	1-218-690-11	s	RESISTOR CHIP 820 1/16W (1608)
R628	1-218-692-11	s	RESISTOR,CHIP 1.0K 1/16W(1608)

(DM-114P BOARD)

Ref. No. or Q'ty	Part No.	SP	Description
R629	1-218-692-11	s	RESISTOR,CHIP 1.0K 1/16W(1608)
R630	1-218-692-11	s	RESISTOR,CHIP 1.0K 1/16W(1608)
R631	1-218-692-11	s	RESISTOR,CHIP 1.0K 1/16W(1608)
R633	1-218-712-11	s	RESISTOR,METAL 6.8K 1/16W
R634	1-218-684-11	s	RESISTOR CHIP 470 1/16W (1608)
R635	1-218-684-11	s	RESISTOR CHIP 470 1/16W (1608)
R636	1-218-687-11	s	RESISTOR CHIP 620 1/16W (1608)
R637	1-218-668-11	s	RESISTOR,CHIP 100 1/16W (1608)
R638	1-218-692-11	s	RESISTOR,CHIP 1.0K 1/16W(1608)
R639	1-218-684-11	s	RESISTOR CHIP 470 1/16W (1608)
R640	1-218-692-11	s	RESISTOR,CHIP 1.0K 1/16W(1608)
R641	1-218-668-11	s	RESISTOR,CHIP 100 1/16W (1608)
R642	1-218-692-11	s	RESISTOR,CHIP 1.0K 1/16W(1608)
R643	1-218-682-11	s	RESISTOR CHIP 390 1/16W (1608)
R644	1-218-692-11	s	RESISTOR,CHIP 1.0K 1/16W(1608)
R645	1-218-661-11	s	RESISTOR,CHIP 51 1/16W (1608)
R646	1-216-864-11	s	RESISTOR,CHIP 0 1/16W (1608)
R647	1-218-716-11	s	RESISTOR,CHIP 10K 1/16W(1608)
R648	1-218-692-11	s	RESISTOR,CHIP 1.0K 1/16W(1608)
R649	1-218-747-11	s	RESISTOR,METAL 200K 1/16(1608)
R701	1-218-732-11	s	RESISTOR,CHIP 47K 1/16W(1608)
R702	1-218-716-11	s	RESISTOR,CHIP 10K 1/16W(1608)
R703	1-218-732-11	s	RESISTOR,CHIP 47K 1/16W(1608)
R704	1-218-726-11	s	RESISTOR CHIP 27K 1/16W (1608)
R705	1-216-853-11	s	RESISTOR,CHIP 470K 1/16W(1608)
R706	1-218-732-11	s	RESISTOR,CHIP 47K 1/16W(1608)
R707	1 218 711 11	s	RESISTOR,METAL 6.2K 1/16W
R708	1-218-726-11	s	RESISTOR CHIP 27K 1/16W (1608)
R709	1-218-711-11	s	RESISTOR,METAL 6.2K 1/16W
R710	1-218-676-11	s	RESISTOR,CHIP 220 1/16W(1608)
R711	1-218-676-11	s	RESISTOR,CHIP 220 1/16W(1608)
R712	1-218-681-11	s	RESISTOR CHIP 360 1/16W (1608)
R713	1-218-706-11	s	RESISTOR,CHIP 3.9K 1/16W(1608)
R715	1-218-718-11	s	RESISTOR CHIP 12K 1/16W (1608)
R716	1-218-693-11	s	RESISTOR,CHIP 1.1K 1/16W(1608)
R717	1-218-716-11	s	RESISTOR,CHIP 10K 1/16W(1608)
R718	1-218-652-11	s	RESISTOR,CHIP 22 1/16W (1608)
R719	1-218-692-11	s	RESISTOR,CHIP 1.0K 1/16W(1608)
R720	1-218-684-11	s	RESISTOR CHIP 470 1/16W (1608)
R721	1-218-680-11	s	RESISTOR,CHIP 330 1/16W(1608)
R723	1-218-697-11	s	RESISTOR,CHIP 1.6K 1/16W(1608)
R724	1-218-702-11	s	RESISTOR CHIP 2.7K 1/16W(1608)
R725	1-218-692-11	s	RESISTOR,CHIP 1.0K 1/16W(1608)
R726	1-218-684-11	s	RESISTOR CHIP 470 1/16W (1608)
R727	1-218-680-11	s	RESISTOR,CHIP 330 1/16W(1608)
R729	1-218-696-11	s	RESISTOR CHIP 1.5K 1/16W(1608)
R730	1-218-701-11	s	RESISTOR,CHIP 2.4K 1/16W(1608)
R731	1-218-692-11	s	RESISTOR,CHIP 1.0K 1/16W(1608)
R732	1-218-692-11	s	RESISTOR,CHIP 1.0K 1/16W(1608)
R733	1-218-668-11	s	RESISTOR,CHIP 100 1/16W (1608)
R734	1-218-668-11	s	RESISTOR,CHIP 100 1/16W (1608)
R735	1-218-740-11	s	RESISTOR,CHIP 100K 1/16W(1608)
R737	1-218-692-11	s	RESISTOR,CHIP 1.0K 1/16W(1608)
R738	1-218-698-11	s	RESISTOR,CHIP 1.8K 1/16W(1608)
R739	1-218-698-11	s	RESISTOR,CHIP 1.8K 1/16W(1608)
R740	1-218-672-11	s	RESISTOR,CHIP 150 1/16W(1608)
R741	1-218-684-11	s	RESISTOR CHIP 470 1/16W (1608)
R742	1-218-672-11	s	RESISTOR,CHIP 150 1/16W(1608)
R743	1-218-704-11	s	RESISTOR,CHIP 3.3K 1/16W(1608)

(DM-114P BOARD)

Ref. No. or Q'ty	Part No.	SP	Description
R744	1-218-716-11	s	RESISTOR,CHIP 10K 1/16W(1608)
R745	1-218-716-11	s	RESISTOR,CHIP 10K 1/16W(1608)
R746	1-218-692-11	s	RESISTOR,CHIP 1.0K 1/16W(1608)
R747	1-218-708-11	s	RESISTOR,CHIP 4.7K 1/16W(1608)
R748	1-218-692-11	s	RESISTOR,CHIP 1.0K 1/16W(1608)
R749	1-218-708-11	s	RESISTOR,CHIP 4.7K 1/16W(1608)
R750	1-218-716-11	s	RESISTOR,CHIP 10K 1/16W(1608)
R751	1-218-732-11	s	RESISTOR,CHIP 47K 1/16W(1608)
R752	1-218-716-11	s	RESISTOR,CHIP 10K 1/16W(1608)
R753	1-218-716-11	s	RESISTOR,CHIP 10K 1/16W(1608)
R754	1-218-716-11	s	RESISTOR,CHIP 10K 1/16W(1608)
R755	1-218-661-11	s	RESISTOR,CHIP 51 1/16W (1608)
R756	1-218-722-11	s	RESISTOR,CHIP 18K 1/16W 1608
R757	1-218-707-11	s	RESISTOR,CHIP 4.3K 1/16W(1608)
R758	1-218-716-11	s	RESISTOR,CHIP 10K 1/16W(1608)
R759	1-218-716-11	s	RESISTOR,CHIP 10K 1/16W(1608)
R760	1-218-652-11	s	RESISTOR,CHIP 22 1/16W (1608)
R761	1-218-652-11	s	RESISTOR,CHIP 22 1/16W (1608)
R762	1-218-719-11	s	RESISTOR,METAL 13K 1/16
R763	1-218-698-11	s	RESISTOR,CHIP 1.8K 1/16W(1608)
R764	1-218-692-11	s	RESISTOR,CHIP 1.0K 1/16W(1608)
R765	1-218-716-11	s	RESISTOR,CHIP 10K 1/16W(1608)
R766	1-218-668-11	s	RESISTOR,CHIP 100 1/16W (1608)
R767	1-218-668-11	s	RESISTOR,CHIP 100 1/16W (1608)
R768	1-218-692-11	s	RESISTOR,CHIP 1.0K 1/16W(1608)
R769	1-218-680-11	s	RESISTOR,CHIP 330 1/16W(1608)
R770	1 218 680 11	s	RESISTOR,CHIP 330 1/16W(1608)
R771	1-218-700-11	s	RESISTOR,CHIP 2.2K 1/16W(1608)
R772	1-218-692-11	s	RESISTOR,CHIP 1.0K 1/16W(1608)
R773	1-218-692-11	s	RESISTOR,CHIP 1.0K 1/16W(1608)
R774	1-218-668-11	s	RESISTOR,CHIP 100 1/16W (1608)
R775	1-218-668-11	s	RESISTOR,CHIP 100 1/16W (1608)
R776	1-218-692-11	s	RESISTOR,CHIP 1.0K 1/16W(1608)
R777	1-218-692-11	s	RESISTOR,CHIP 1.0K 1/16W(1608)
R778	1-218-692-11	s	RESISTOR,CHIP 1.0K 1/16W(1608)
R779	1-218-692-11	s	RESISTOR,CHIP 1.0K 1/16W(1608)
R780	1-218-690-11	s	RESISTOR CHIP 820 1/16W (1608)
R781	1-218-690-11	s	RESISTOR CHIP 820 1/16W (1608)
R782	1-218-692-11	s	RESISTOR,CHIP 1.0K 1/16W(1608)
R783	1-218-684-11	s	RESISTOR CHIP 470 1/16W (1608)
R784	1-218-684-11	s	RESISTOR CHIP 470 1/16W (1608)
R785	1-218-690-11	s	RESISTOR CHIP 820 1/16W (1608)
R786	1-218-668-11	s	RESISTOR,CHIP 100 1/16W (1608)
R787	1-218-692-11	s	RESISTOR,CHIP 1.0K 1/16W(1608)
R788	1-218-692-11	s	RESISTOR,CHIP 1.0K 1/16W(1608)
R789	1-218-692-11	s	RESISTOR,CHIP 1.0K 1/16W(1608)
R790	1-218-692-11	s	RESISTOR,CHIP 1.0K 1/16W(1608)
R791	1-218-684-11	s	RESISTOR CHIP 470 1/16W (1608)
R792	1-218-712-11	s	RESISTOR,METAL 6.8K 1/16W
R793	1-218-684-11	s	RESISTOR CHIP 470 1/16W (1608)
R794	1-218-687-11	s	RESISTOR CHIP 620 1/16W (1608)
R795	1-218-692-11	s	RESISTOR,CHIP 1.0K 1/16W(1608)
R796	1-218-668-11	s	RESISTOR,CHIP 100 1/16W (1608)
R797	1-218-684-11	s	RESISTOR CHIP 470 1/16W (1608)
R798	1-218-692-11	s	RESISTOR,CHIP 1.0K 1/16W(1608)
R799	1-218-668-11	s	RESISTOR,CHIP 100 1/16W (1608)
R800	1-218-692-11	s	RESISTOR,CHIP 1.0K 1/16W(1608)
R801	1-216-864-11	s	RESISTOR,CHIP 0 1/16W (1608)
R802	1-218-692-11	s	RESISTOR,CHIP 1.0K 1/16W(1608)

(DM-114P BOARD)

Ref. No. or Q'ty	Part No.	SP	Description
R803	1-218-661-11	s	RESISTOR,CHIP 51 1/16W (1608)
R806	1-216-864-11	s	RESISTOR,CHIP 0 1/16W (1608)
R901	1-218-692-11	s	RESISTOR,CHIP 1.0K 1/16W(1608)
R902	1-218-668-11	s	RESISTOR,CHIP 100 1/16W (1608)
R903	1-218-716-11	s	RESISTOR,CHIP 10K 1/16W(1608)
R905	1-218-716-11	s	RESISTOR,CHIP 10K 1/16W(1608)
R906	1-218-692-11	s	RESISTOR,CHIP 1.0K 1/16W(1608)
R907	1-218-668-11	s	RESISTOR,CHIP 100 1/16W (1608)
R908	1-218-716-11	s	RESISTOR,CHIP 10K 1/16W(1608)
R909	1-218-716-11	s	RESISTOR,CHIP 10K 1/16W(1608)
R910	1-216-864-11	s	RESISTOR,CHIP 0 1/16W (1608)
R911	1-216-864-11	s	RESISTOR,CHIP 0 1/16W (1608)
R912	1-218-668-11	s	RESISTOR,CHIP 100 1/16W (1608)
R913	1-218-668-11	s	RESISTOR,CHIP 100 1/16W (1608)
R915	1-218-668-11	s	RESISTOR,CHIP 100 1/16W (1608)
R916	1-218-740-11	s	RESISTOR,CHIP 100K 1/16W(1608)
R917	1-218-740-11	s	RESISTOR,CHIP 100K 1/16W(1608)
R918	1-218-740-11	s	RESISTOR,CHIP 100K 1/16W(1608)
R919	1-218-740-11	s	RESISTOR,CHIP 100K 1/16W(1608)
R920	1-218-740-11	s	RESISTOR,CHIP 100K 1/16W(1608)
R921	1-218-740-11	s	RESISTOR,CHIP 100K 1/16W(1608)
R922	1-218-716-11	s	RESISTOR,CHIP 10K 1/16W(1608)
R923	1-218-716-11	s	RESISTOR,CHIP 10K 1/16W(1608)
R924	1-218-716-11	s	RESISTOR,CHIP 10K 1/16W(1608)
R925	1-218-716-11	s	RESISTOR,CHIP 10K 1/16W(1608)
R926	1-218-716-11	s	RESISTOR,CHIP 10K 1/16W(1608)
R928	1 218 740 11	s	RESISTOR,CHIP 100K 1/16W(1608)
R929	1-218-740-11	s	RESISTOR,CHIP 100K 1/16W(1608)
R930	1-218-740-11	s	RESISTOR,CHIP 100K 1/16W(1608)
R931	1-218-740-11	s	RESISTOR,CHIP 100K 1/16W(1608)
R933	1-218-740-11	s	RESISTOR,CHIP 100K 1/16W(1608)
R934	1-218-740-11	s	RESISTOR,CHIP 100K 1/16W(1608)
R935	1-218-716-11	s	RESISTOR,CHIP 10K 1/16W(1608)
R936	1-218-740-11	s	RESISTOR,CHIP 100K 1/16W(1608)
R937	1-218-692-11	s	RESISTOR,CHIP 1.0K 1/16W(1608)
R938	1-218-692-11	s	RESISTOR,CHIP 1.0K 1/16W(1608)
R939	1-218-700-11	s	RESISTOR,CHIP 2.2K 1/16W(1608)
R940	1-218-716-11	s	RESISTOR,CHIP 10K 1/16W(1608)
R941	1-218-692-11	s	RESISTOR,CHIP 1.0K 1/16W(1608)
R942	1-218-716-11	s	RESISTOR,CHIP 10K 1/16W(1608)
R943	1-218-740-11	s	RESISTOR,CHIP 100K 1/16W(1608)
R944	1-218-692-11	s	RESISTOR,CHIP 1.0K 1/16W(1608)
R945	1-218-732-11	s	RESISTOR,CHIP 47K 1/16W(1608)
R946	1-218-668-11	s	RESISTOR,CHIP 100 1/16W (1608)
R947	1-218-668-11	s	RESISTOR,CHIP 100 1/16W (1608)
R948	1-218-668-11	s	RESISTOR,CHIP 100 1/16W (1608)
R949	1-218-668-11	s	RESISTOR,CHIP 100 1/16W (1608)
R950	1-218-668-11	s	RESISTOR,CHIP 100 1/16W (1608)
R951	1-218-668-11	s	RESISTOR,CHIP 100 1/16W (1608)
R952	1-218-660-91	s	RESISTOR CHIP 47 1/16W (1608)
R953	1-218-660-91	s	RESISTOR CHIP 47 1/16W (1608)
R954	1-218-660-91	s	RESISTOR CHIP 47 1/16W (1608)
R955	1-218-660-91	s	RESISTOR CHIP 47 1/16W (1608)
R956	1-218-660-91	s	RESISTOR CHIP 47 1/16W (1608)
R957	1-218-660-91	s	RESISTOR CHIP 47 1/16W (1608)
R958	1-218-668-11	s	RESISTOR,CHIP 100 1/16W (1608)
R959	1-218-668-11	s	RESISTOR,CHIP 100 1/16W (1608)
R960	1-218-668-11	s	RESISTOR,CHIP 100 1/16W (1608)
R961	1-218-668-11	s	RESISTOR,CHIP 100 1/16W (1608)

(DM-114P BOARD)

Ref. No. or Q'ty	Part No.	SP	Description
R962	1-218-668-11	s	RESISTOR,CHIP 100 1/16W (1608)
R963	1-218-668-11	s	RESISTOR,CHIP 100 1/16W (1608)
R964	1-218-708-11	s	RESISTOR,CHIP 4.7K 1/16W(1608)
R965	1-218-708-11	s	RESISTOR,CHIP 4.7K 1/16W(1608)
R966	1-218-708-11	s	RESISTOR,CHIP 4.7K 1/16W(1608)
R967	1-218-708-11	s	RESISTOR,CHIP 4.7K 1/16W(1608)
R968	1-218-708-11	s	RESISTOR,CHIP 4.7K 1/16W(1608)
R969	1-218-708-11	s	RESISTOR,CHIP 4.7K 1/16W(1608)
R970	1-218-700-11	s	RESISTOR,CHIP 2.2K 1/16W(1608)
R971	1-218-700-11	s	RESISTOR,CHIP 2.2K 1/16W(1608)
R972	1-218-700-11	s	RESISTOR,CHIP 2.2K 1/16W(1608)
R973	1-218-716-11	s	RESISTOR,CHIP 10K 1/16W(1608)
R974	1-218-716-11	s	RESISTOR,CHIP 10K 1/16W(1608)
R975	1-218-716-11	s	RESISTOR,CHIP 10K 1/16W(1608)
R976	1-218-716-11	s	RESISTOR,CHIP 10K 1/16W(1608)
R977	1-218-716-11	s	RESISTOR,CHIP 10K 1/16W(1608)
R978	1-218-716-11	s	RESISTOR,CHIP 10K 1/16W(1608)
R979	1-218-716-11	s	RESISTOR,CHIP 10K 1/16W(1608)
R980	1-218-716-11	s	RESISTOR,CHIP 10K 1/16W(1608)
R981	1-218-716-11	s	RESISTOR,CHIP 10K 1/16W(1608)
R982	1-218-716-11	s	RESISTOR,CHIP 10K 1/16W(1608)
R983	1-218-716-11	s	RESISTOR,CHIP 10K 1/16W(1608)
R984	1-218-716-11	s	RESISTOR,CHIP 10K 1/16W(1608)
R985	1-216-864-11	s	RESISTOR,CHIP 0 1/16W (1608)
R986	1-216-864-11	s	RESISTOR,CHIP 0 1/16W (1608)
R987	1-216-864-11	s	RESISTOR,CHIP 0 1/16W (1608)
R988	1 218 748 11	s	RESISTOR,CHIP 220K 1/16W(1608)
R990	1-218-748-11	s	RESISTOR,CHIP 220K 1/16W(1608)
R991	1-218-748-11	s	RESISTOR,CHIP 220K 1/16W(1608)
R993	1-218-740-11	s	RESISTOR,CHIP 100K 1/16W(1608)
R994	1-218-740-11	s	RESISTOR,CHIP 100K 1/16W(1608)
R995	1-218-740-11	s	RESISTOR,CHIP 100K 1/16W(1608)
R996	1-218-740-11	s	RESISTOR,CHIP 100K 1/16W(1608)
R997	1-218-740-11	s	RESISTOR,CHIP 100K 1/16W(1608)
R998	1-218-740-11	s	RESISTOR,CHIP 100K 1/16W(1608)
R999	1-218-740-11	s	RESISTOR,CHIP 100K 1/16W(1608)
R1000	1-218-740-11	s	RESISTOR,CHIP 100K 1/16W(1608)
R1001	1-218-740-11	s	RESISTOR,CHIP 100K 1/16W(1608)
R1101	1-218-679-91	s	RESISTOR,METAL FILM 300 1/16W
R1102	1-218-660-91	s	RESISTOR CHIP 47 1/16W (1608)
R1103	1-218-660-91	s	RESISTOR CHIP 47 1/16W (1608)
R1104	1-218-736-11	s	RESISTOR,CHIP 68K 1/16W(1608)
R1105	1-218-692-11	s	RESISTOR,CHIP 1.0K 1/16W(1608)
R1106	1-218-660-91	s	RESISTOR CHIP 47 1/16W (1608)
R1107	1-218-660-91	s	RESISTOR CHIP 47 1/16W (1608)
R1108	1-218-668-11	s	RESISTOR,CHIP 100 1/16W (1608)
R1109	1-218-692-11	s	RESISTOR,CHIP 1.0K 1/16W(1608)
R1110	1-218-692-11	s	RESISTOR,CHIP 1.0K 1/16W(1608)
R1111	1-218-660-91	s	RESISTOR CHIP 47 1/16W (1608)
R1112	1-218-692-11	s	RESISTOR,CHIP 1.0K 1/16W(1608)
R1113	1-218-688-11	s	RESISTOR,CHIP 680 1/16W(1608)
R1114	1-218-680-11	s	RESISTOR,CHIP 330 1/16W(1608)
R1115	1-218-680-11	s	RESISTOR,CHIP 330 1/16W(1608)
R1116	1-218-660-91	s	RESISTOR CHIP 47 1/16W (1608)
R1117	1-218-692-11	s	RESISTOR,CHIP 1.0K 1/16W(1608)
R1118	1-218-660-91	s	RESISTOR CHIP 47 1/16W (1608)
R1119	1-218-692-11	s	RESISTOR,CHIP 1.0K 1/16W(1608)
R1120	1-218-700-11	s	RESISTOR,CHIP 2.2K 1/16W(1608)
R1121	1-218-682-11	s	RESISTOR CHIP 390 1/16W (1608)

(DM-114P BOARD)

Ref. No. or Q'ty	Part No.	SP	Description
R1122	1-218-740-11	s	RESISTOR,CHIP 100K 1/16W(1608)
R1123	1-216-857-11	s	RESISTOR,CHIP 1.0M 1/16W 1608
R1124	1-218-724-11	s	RESISTOR,CHIP 22K 1/16W(1608)
R1125	1-218-700-11	s	RESISTOR,CHIP 2.2K 1/16W(1608)
R1126	1-218-704-11	s	RESISTOR,CHIP 3.3K 1/16W(1608)
R1127	1-218-722-11	s	RESISTOR,CHIP 18K 1/16W 1608
R1128	1-218-725-11	s	RESISTOR,CHIP 24K 1/16W(1608)
R1129	1-218-708-11	s	RESISTOR,CHIP 4.7K 1/16W(1608)
R1130	1-218-668-11	s	RESISTOR,CHIP 100 1/16W (1608)
R1131	1-218-668-11	s	RESISTOR,CHIP 100 1/16W (1608)
R1132	1-218-698-11	s	RESISTOR,CHIP 1.8K 1/16W(1608)
R1133	1-218-668-11	s	RESISTOR,CHIP 100 1/16W (1608)
R1134	1-218-698-11	s	RESISTOR,CHIP 1.8K 1/16W(1608)
R1135	1-218-702-11	s	RESISTOR CHIP 2.7K 1/16W(1608)
R1136	1-218-708-11	s	RESISTOR,CHIP 4.7K 1/16W(1608)
R1137	1-218-748-11	s	RESISTOR,CHIP 220K 1/16W(1608)
R1138	1-218-700-11	s	RESISTOR,CHIP 2.2K 1/16W(1608)
R1139	1-218-718-11	s	RESISTOR CHIP 12K 1/16W (1608)
R1140	1-218-680-11	s	RESISTOR,CHIP 330 1/16W(1608)
R1141	1-218-700-11	s	RESISTOR,CHIP 2.2K 1/16W(1608)
R1142	1-218-714-11	s	RESISTOR,CHIP 8.2K 1/16W(1608)
R1143	1-218-724-11	s	RESISTOR,CHIP 22K 1/16W(1608)
R1145	1-218-740-11	s	RESISTOR,CHIP 100K 1/16W(1608)
R1146	1-218-708-11	s	RESISTOR,CHIP 4.7K 1/16W(1608)
R1147	1-218-724-11	s	RESISTOR,CHIP 22K 1/16W(1608)
R1149	1-218-724-11	s	RESISTOR,CHIP 22K 1/16W(1608)
R1151	1 218 692 11	s	RESISTOR,CHIP 1.0K 1/16W(1608)
R1152	1-218-700-11	s	RESISTOR,CHIP 2.2K 1/16W(1608)
R1153	1-218-660-91	s	RESISTOR CHIP 47 1/16W (1608)
R1154	1-218-668-11	s	RESISTOR,CHIP 100 1/16W (1608)
R1155	1-218-724-11	s	RESISTOR,CHIP 22K 1/16W(1608)
R1156	1-218-724-11	s	RESISTOR,CHIP 22K 1/16W(1608)
R1157	1-218-660-91	s	RESISTOR CHIP 47 1/16W (1608)
R1158	1-218-676-11	s	RESISTOR,CHIP 220 1/16W(1608)
R1159	1-218-676-11	s	RESISTOR,CHIP 220 1/16W(1608)
R1160	1-218-684-11	s	RESISTOR CHIP 470 1/16W (1608)
R1161	1-218-684-11	s	RESISTOR CHIP 470 1/16W (1608)
R1162	1-218-684-11	s	RESISTOR CHIP 470 1/16W (1608)
R1163	1-218-684-11	s	RESISTOR CHIP 470 1/16W (1608)
R1164	1-218-668-11	s	RESISTOR,CHIP 100 1/16W (1608)
R1165	1-218-668-11	s	RESISTOR,CHIP 100 1/16W (1608)
R1166	1-218-718-11	s	RESISTOR CHIP 12K 1/16W (1608)
R1167	1-218-724-11	s	RESISTOR,CHIP 22K 1/16W(1608)
R1168	1-218-740-11	s	RESISTOR,CHIP 100K 1/16W(1608)
R1201	1-218-660-91	s	RESISTOR CHIP 47 1/16W (1608)
R1202	1-218-679-91	s	RESISTOR,METAL FILM 300 1/16W
R1203	1-218-692-11	s	RESISTOR,CHIP 1.0K 1/16W(1608)
R1204	1-218-660-91	s	RESISTOR CHIP 47 1/16W (1608)
R1205	1-218-668-11	s	RESISTOR,CHIP 100 1/16W (1608)
R1206	1-218-692-11	s	RESISTOR,CHIP 1.0K 1/16W(1608)
R1207	1-218-660-91	s	RESISTOR CHIP 47 1/16W (1608)
R1208	1-218-688-11	s	RESISTOR,CHIP 680 1/16W(1608)
R1209	1-218-680-11	s	RESISTOR,CHIP 330 1/16W(1608)
R1210	1-218-680-11	s	RESISTOR,CHIP 330 1/16W(1608)
R1211	1-218-660-91	s	RESISTOR CHIP 47 1/16W (1608)
R1212	1-218-692-11	s	RESISTOR,CHIP 1.0K 1/16W(1608)
R1213	1-218-660-91	s	RESISTOR CHIP 47 1/16W (1608)
R1214	1-218-692-11	s	RESISTOR,CHIP 1.0K 1/16W(1608)
R1215	1-218-700-11	s	RESISTOR,CHIP 2.2K 1/16W(1608)

(DM-114P BOARD)

Ref. No. or Q'ty	Part No.	SP	Description
R1216	1-218-690-11	s	RESISTOR CHIP 820 1/16W (1608)
R1217	1-218-740-11	s	RESISTOR,CHIP 100K 1/16W(1608)
R1218	1-218-690-11	s	RESISTOR CHIP 820 1/16W (1608)
R1219	1-216-857-11	s	RESISTOR,CHIP 1.0M 1/16W 1608
R1220	1-218-724-11	s	RESISTOR,CHIP 22K 1/16W(1608)
R1221	1-218-700-11	s	RESISTOR,CHIP 2.2K 1/16W(1608)
R1222	1-218-704-11	s	RESISTOR,CHIP 3.3K 1/16W(1608)
R1223	1-218-708-11	s	RESISTOR,CHIP 4.7K 1/16W(1608)
R1224	1-218-723-11	s	RESISTOR,CHIP 20K 1/16W(1608)
R1225	1-218-722-11	s	RESISTOR,CHIP 18K 1/16W 1608
R1226	1-218-668-11	s	RESISTOR,CHIP 100 1/16W (1608)
R1227	1-218-668-11	s	RESISTOR,CHIP 100 1/16W (1608)
R1228	1-218-698-11	s	RESISTOR,CHIP 1.8K 1/16W(1608)
R1229	1-218-668-11	s	RESISTOR,CHIP 100 1/16W (1608)
R1230	1-218-698-11	s	RESISTOR,CHIP 1.8K 1/16W(1608)
R1231	1-218-748-11	s	RESISTOR,CHIP 220K 1/16W(1608)
R1232	1-218-708-11	s	RESISTOR,CHIP 4.7K 1/16W(1608)
R1233	1-218-700-11	s	RESISTOR,CHIP 2.2K 1/16W(1608)
R1234	1-218-680-11	s	RESISTOR,CHIP 330 1/16W(1608)
R1235	1-218-700-11	s	RESISTOR,CHIP 2.2K 1/16W(1608)
R1237	1-218-714-11	s	RESISTOR,CHIP 8.2K 1/16W(1608)
R1238	1-218-722-11	s	RESISTOR,CHIP 18K 1/16W 1608
R1239	1-218-740-11	s	RESISTOR,CHIP 100K 1/16W(1608)
R1240	1-218-708-11	s	RESISTOR,CHIP 4.7K 1/16W(1608)
R1245	1-218-692-11	s	RESISTOR,CHIP 1.0K 1/16W(1608)
R1246	1-218-700-11	s	RESISTOR,CHIP 2.2K 1/16W(1608)
R1247	1 218 660 91	s	RESISTOR CHIP 47 1/16W (1608)
R1248	1-218-668-11	s	RESISTOR,CHIP 100 1/16W (1608)
R1249	1-218-724-11	s	RESISTOR,CHIP 22K 1/16W(1608)
R1250	1-218-724-11	s	RESISTOR,CHIP 22K 1/16W(1608)
R1251	1-218-660-91	s	RESISTOR CHIP 47 1/16W (1608)
R1252	1-218-676-11	s	RESISTOR,CHIP 220 1/16W(1608)
R1253	1-218-676-11	s	RESISTOR,CHIP 220 1/16W(1608)
R1268	1-218-740-11	s	RESISTOR,CHIP 100K 1/16W(1608)
R1301	1-218-668-11	s	RESISTOR,CHIP 100 1/16W (1608)
R1302	1-218-700-11	s	RESISTOR,CHIP 2.2K 1/16W(1608)
R1303	1-218-668-11	s	RESISTOR,CHIP 100 1/16W (1608)
R1304	1-218-668-11	s	RESISTOR,CHIP 100 1/16W (1608)
R1305	1-218-668-11	s	RESISTOR,CHIP 100 1/16W (1608)
R1306	1-218-708-11	s	RESISTOR,CHIP 4.7K 1/16W(1608)
R1307	1-218-724-11	s	RESISTOR,CHIP 22K 1/16W(1608)
R1308	1-218-714-11	s	RESISTOR,CHIP 8.2K 1/16W(1608)
R1309	1-218-716-11	s	RESISTOR,CHIP 10K 1/16W(1608)
R1310	1-218-726-11	s	RESISTOR CHIP 27K 1/16W (1608)
R1311	1-218-660-91	s	RESISTOR CHIP 47 1/16W (1608)
R1312	1-218-694-11	s	RESISTOR CHIP 1.2K1/16W(1608)
R1313	1-218-668-11	s	RESISTOR,CHIP 100 1/16W (1608)
R1314	1-218-700-11	s	RESISTOR,CHIP 2.2K 1/16W(1608)
R1315	1-218-676-11	s	RESISTOR,CHIP 220 1/16W(1608)
R1316	1-218-692-11	s	RESISTOR,CHIP 1.0K 1/16W(1608)
R1317	1-218-700-11	s	RESISTOR,CHIP 2.2K 1/16W(1608)
R1318	1-218-684-11	s	RESISTOR CHIP 470 1/16W (1608)
R1319	1-218-716-11	s	RESISTOR,CHIP 10K 1/16W(1608)
R1320	1-218-716-11	s	RESISTOR,CHIP 10K 1/16W(1608)
R1321	1-218-728-11	s	RESISTOR,METAL 33K 1/16W
R1322	1-218-728-11	s	RESISTOR,METAL 33K 1/16W
R1323	1-216-864-11	s	RESISTOR,CHIP 0 1/16W (1608)
R1324	1-218-716-11	s	RESISTOR,CHIP 10K 1/16W(1608)
R1325	1-218-724-11	s	RESISTOR,CHIP 22K 1/16W(1608)

(DM-114P BOARD)

Ref. No. or Q'ty	Part No.	SP	Description
R1326	1-218-724-11	s	RESISTOR,CHIP 22K 1/16W(1608)
R1328	1-218-740-11	s	RESISTOR,CHIP 100K 1/16W(1608)
R1329	1-218-716-11	s	RESISTOR,CHIP 10K 1/16W(1608)
R1330	1-218-740-11	s	RESISTOR,CHIP 100K 1/16W(1608)
R1331	1-218-692-11	s	RESISTOR,CHIP 1.0K 1/16W(1608)
R1332	1-218-668-11	s	RESISTOR,CHIP 100 1/16W (1608)
R1333	1-218-668-11	s	RESISTOR,CHIP 100 1/16W (1608)
R1334	1-218-700-11	s	RESISTOR,CHIP 2.2K 1/16W(1608)
R1335	1-218-668-11	s	RESISTOR,CHIP 100 1/16W (1608)
R1336	1-218-668-11	s	RESISTOR,CHIP 100 1/16W (1608)
R1337	1-218-668-11	s	RESISTOR,CHIP 100 1/16W (1608)
R1338	1-218-724-11	s	RESISTOR,CHIP 22K 1/16W(1608)
R1339	1-218-730-11	s	RESISTOR METAL FILM CHIP 39K
R1340	1-218-716-11	s	RESISTOR,CHIP 10K 1/16W(1608)
R1341	1-218-716-11	s	RESISTOR,CHIP 10K 1/16W(1608)
R1342	1-218-716-11	s	RESISTOR,CHIP 10K 1/16W(1608)
R1343	1-218-714-11	s	RESISTOR,CHIP 8.2K 1/16W(1608)
R1344	1-218-700-11	s	RESISTOR,CHIP 2.2K 1/16W(1608)
R1345	1-218-684-11	s	RESISTOR CHIP 470 1/16W (1608)
R1346	1-218-716-11	s	RESISTOR,CHIP 10K 1/16W(1608)
R1347	1-218-748-11	s	RESISTOR,CHIP 220K 1/16W(1608)
R1349	1-218-684-11	s	RESISTOR CHIP 470 1/16W (1608)
R1350	1-216-863-11	s	RESISTOR,CHIP 3.3M 1/16W 1608
R1351	1-218-702-11	s	RESISTOR CHIP 2.7K 1/16W(1608)
R1352	1-218-686-11	s	RESISTOR CHIP 560 1/16W (1608)
R1353	1-218-708-11	s	RESISTOR,CHIP 4.7K 1/16W(1608)
R1354	1 218 684 11	s	RESISTOR CHIP 470 1/16W (1608)
R1355	1-218-676-11	s	RESISTOR,CHIP 220 1/16W(1608)
R1356	1-218-676-11	s	RESISTOR,CHIP 220 1/16W(1608)
R1357	1-218-676-11	s	RESISTOR,CHIP 220 1/16W(1608)
R1358	1-216-863-11	s	RESISTOR,CHIP 3.3M 1/16W 1608
R1359	1-218-716-11	s	RESISTOR,CHIP 10K 1/16W(1608)
R1360	1-218-701-11	s	RESISTOR,CHIP 2.4K 1/16W(1608)
R1361	1-218-664-11	s	RESISTOR,CHIP 68 1/16W (1608)
R1362	1-218-692-11	s	RESISTOR,CHIP 1.0K 1/16W(1608)
R1363	1-218-722-11	s	RESISTOR,CHIP 18K 1/16W 1608
R1364	1-218-717-11	s	RESISTOR,CHIP 11K 1/16W (1608)
R1365	1-218-720-11	s	RESISTOR,CHIP 15K 1/16W(1608)
R1366	1-218-728-11	s	RESISTOR,METAL 33K 1/16W
R1367	1-218-700-11	s	RESISTOR,CHIP 2.2K 1/16W(1608)
R1368	1-218-694-11	s	RESISTOR CHIP 1.2K1/16W(1608)
R1369	1-218-708-11	s	RESISTOR,CHIP 4.7K 1/16W(1608)
R1370	1-216-857-11	s	RESISTOR,CHIP 1.0M 1/16W 1608
R1371	1-218-668-11	s	RESISTOR,CHIP 100 1/16W (1608)
R1372	1-218-676-11	s	RESISTOR,CHIP 220 1/16W(1608)
R1373	1-218-722-11	s	RESISTOR,CHIP 18K 1/16W 1608
R1374	1-218-676-11	s	RESISTOR,CHIP 220 1/16W(1608)
R1375	1-218-716-11	s	RESISTOR,CHIP 10K 1/16W(1608)
R1376	1-218-704-11	s	RESISTOR,CHIP 3.3K 1/16W(1608)
R1377	1-218-716-11	s	RESISTOR,CHIP 10K 1/16W(1608)
R1378	1-218-700-11	s	RESISTOR,CHIP 2.2K 1/16W(1608)
R1379	1-218-718-11	s	RESISTOR CHIP 12K 1/16W (1608)
R1380	1-218-668-11	s	RESISTOR,CHIP 100 1/16W (1608)
R1381	1-218-676-11	s	RESISTOR,CHIP 220 1/16W(1608)
R1382	1-218-687-11	s	RESISTOR CHIP 620 1/16W (1608)
R1383	1-218-676-11	s	RESISTOR,CHIP 220 1/16W(1608)
R1384	1-218-700-11	s	RESISTOR,CHIP 2.2K 1/16W(1608)
R1385	1-218-700-11	s	RESISTOR,CHIP 2.2K 1/16W(1608)
R1386	1-218-676-11	s	RESISTOR,CHIP 220 1/16W(1608)

(DM-114P BOARD)

Ref. No. or Q'ty	Part No.	SP	Description
R1387	1-218-680-11	s	RESISTOR,CHIP 330 1/16W(1608)
R1388	1-218-704-11	s	RESISTOR,CHIP 3.3K 1/16W(1608)
R1389	1-218-668-11	s	RESISTOR,CHIP 100 1/16W (1608)
R1390	1-218-703-11	s	RESISTOR,METAL 3.0K 1/16(1608)
R1391	1-218-718-11	s	RESISTOR CHIP 12K 1/16W (1608)
R1392	1-218-732-11	s	RESISTOR,CHIP 47K 1/16W(1608)
R1393	1-218-732-11	s	RESISTOR,CHIP 47K 1/16W(1608)
R1394	1-218-700-11	s	RESISTOR,CHIP 2.2K 1/16W(1608)
R1395	1-218-700-11	s	RESISTOR,CHIP 2.2K 1/16W(1608)
R1396	1-218-704-11	s	RESISTOR,CHIP 3.3K 1/16W(1608)
R1397	1-218-704-11	s	RESISTOR,CHIP 3.3K 1/16W(1608)
R1398	1-218-752-11	s	RESISTOR,CHIP 330K 1/16W(1608)
R1399	1-218-700-11	s	RESISTOR,CHIP 2.2K 1/16W(1608)
R1400	1-218-716-11	s	RESISTOR,CHIP 10K 1/16W(1608)
R1401	1-218-716-11	s	RESISTOR,CHIP 10K 1/16W(1608)
R1402	1-218-716-11	s	RESISTOR,CHIP 10K 1/16W(1608)
R1403	1-218-704-11	s	RESISTOR,CHIP 3.3K 1/16W(1608)
R1404	1-218-736-11	s	RESISTOR,CHIP 68K 1/16W(1608)
R1406	1-218-668-11	s	RESISTOR,CHIP 100 1/16W (1608)
R1407	1-218-692-11	s	RESISTOR,CHIP 1.0K 1/16W(1608)
R1408	1-218-692-11	s	RESISTOR,CHIP 1.0K 1/16W(1608)
R1409	1-218-692-11	s	RESISTOR,CHIP 1.0K 1/16W(1608)
R1410	1-218-722-11	s	RESISTOR,CHIP 18K 1/16W 1608
R1411	1-218-692-11	s	RESISTOR,CHIP 1.0K 1/16W(1608)
R1412	1-218-708-11	s	RESISTOR,CHIP 4.7K 1/16W(1608)
R1413	1-218-704-11	s	RESISTOR,CHIP 3.3K 1/16W(1608)
R1414	1 218 724 11	s	RESISTOR,CHIP 22K 1/16W(1608)
R1415	1-218-725-11	s	RESISTOR,CHIP 24K 1/16W(1608)
R1416	1-218-699-11	s	RESISTOR CHIP 2.0K 1/16W(1608)
R1417	1-218-692-11	s	RESISTOR,CHIP 1.0K 1/16W(1608)
R1418	1-218-696-11	s	RESISTOR CHIP 1.5K 1/16W(1608)
R1419	1-218-708-11	s	RESISTOR,CHIP 4.7K 1/16W(1608)
R1420	1-216-864-11	s	RESISTOR,CHIP 0 1/16W (1608)
R1421	1-218-708-11	s	RESISTOR,CHIP 4.7K 1/16W(1608)
R1422	1-218-660-91	s	RESISTOR CHIP 47 1/16W (1608)
R1423	1-218-676-11	s	RESISTOR,CHIP 220 1/16W(1608)
R1424	1-218-676-11	s	RESISTOR,CHIP 220 1/16W(1608)
R1425	1-218-660-91	s	RESISTOR CHIP 47 1/16W (1608)
R1426	1-216-864-11	s	RESISTOR,CHIP 0 1/16W (1608)
R1428	1-218-660-91	s	RESISTOR CHIP 47 1/16W (1608)
R1429	1-218-668-11	s	RESISTOR,CHIP 100 1/16W (1608)
R1430	1-218-668-11	s	RESISTOR,CHIP 100 1/16W (1608)
R1431	1-218-668-11	s	RESISTOR,CHIP 100 1/16W (1608)
R1432	1-218-668-11	s	RESISTOR,CHIP 100 1/16W (1608)
R1433	1-218-668-11	s	RESISTOR,CHIP 100 1/16W (1608)
R1434	1-218-668-11	s	RESISTOR,CHIP 100 1/16W (1608)
R1435	1-218-668-11	s	RESISTOR,CHIP 100 1/16W (1608)
R1436	1-218-668-11	s	RESISTOR,CHIP 100 1/16W (1608)
R1438	1-218-699-11	s	RESISTOR CHIP 2.0K 1/16W(1608)
R1439	1-218-710-11	s	RESISTOR,CHIP 5.6K 1/16W(1608)
R1441	1-218-700-11	s	RESISTOR,CHIP 2.2K 1/16W(1608)
R1444	1-216-864-11	s	RESISTOR,CHIP 0 1/16W (1608)
R1501	1-218-668-11	s	RESISTOR,CHIP 100 1/16W (1608)
R1502	1-218-668-11	s	RESISTOR,CHIP 100 1/16W (1608)
R1503	1-218-668-11	s	RESISTOR,CHIP 100 1/16W (1608)
R1504	1-218-668-11	s	RESISTOR,CHIP 100 1/16W (1608)
R1505	1-218-724-11	s	RESISTOR,CHIP 22K 1/16W(1608)
R1506	1-218-714-11	s	RESISTOR,CHIP 8.2K 1/16W(1608)
R1507	1-218-660-91	s	RESISTOR CHIP 47 1/16W (1608)

(DM-114P BOARD)

Ref. No. or Q'ty	Part No.	SP	Description
R1508	1-218-716-11	s	RESISTOR,CHIP 10K 1/16W(1608)
R1509	1-218-726-11	s	RESISTOR CHIP 27K 1/16W (1608)
R1510	1-218-692-11	s	RESISTOR,CHIP 1.0K 1/16W(1608)
R1511	1-218-668-11	s	RESISTOR,CHIP 100 1/16W (1608)
R1512	1-218-700-11	s	RESISTOR,CHIP 2.2K 1/16W(1608)
R1513	1-218-676-11	s	RESISTOR,CHIP 220 1/16W(1608)
R1514	1-218-692-11	s	RESISTOR,CHIP 1.0K 1/16W(1608)
R1515	1-218-700-11	s	RESISTOR,CHIP 2.2K 1/16W(1608)
R1516	1-218-684-11	s	RESISTOR CHIP 470 1/16W (1608)
R1517	1-218-716-11	s	RESISTOR,CHIP 10K 1/16W(1608)
R1518	1-218-716-11	s	RESISTOR,CHIP 10K 1/16W(1608)
R1519	1-218-728-11	s	RESISTOR,METAL 33K 1/16W
R1520	1-218-728-11	s	RESISTOR,METAL 33K 1/16W
R1521	1-216-864-11	s	RESISTOR,CHIP 0 1/16W (1608)
R1522	1-218-732-11	s	RESISTOR,CHIP 47K 1/16W(1608)
R1523	1-216-864-11	s	RESISTOR,CHIP 0 1/16W (1608)
R1524	1-218-716-11	s	RESISTOR,CHIP 10K 1/16W(1608)
R1525	1-218-724-11	s	RESISTOR,CHIP 22K 1/16W(1608)
R1526	1-218-724-11	s	RESISTOR,CHIP 22K 1/16W(1608)
R1528	1-218-740-11	s	RESISTOR,CHIP 100K 1/16W(1608)
R1529	1-218-716-11	s	RESISTOR,CHIP 10K 1/16W(1608)
R1530	1-218-740-11	s	RESISTOR,CHIP 100K 1/16W(1608)
R1531	1-216-864-11	s	RESISTOR,CHIP 0 1/16W (1608)
R1533	1-218-668-11	s	RESISTOR,CHIP 100 1/16W (1608)
R1534	1-218-668-11	s	RESISTOR,CHIP 100 1/16W (1608)
R1535	1-218-668-11	s	RESISTOR,CHIP 100 1/16W (1608)
R1536	1 218 668 11	s	RESISTOR,CHIP 100 1/16W (1608)
R1537	1-218-700-11	s	RESISTOR,CHIP 2.2K 1/16W(1608)
R1538	1-218-730-11	s	RESISTOR METAL FILM CHIP 39K
R1539	1-218-716-11	s	RESISTOR,CHIP 10K 1/16W(1608)
R1541	1-218-716-11	s	RESISTOR,CHIP 10K 1/16W(1608)
R1542	1-218-724-11	s	RESISTOR,CHIP 22K 1/16W(1608)
R1544	1-218-716-11	s	RESISTOR,CHIP 10K 1/16W(1608)
R1545	1-218-716-11	s	RESISTOR,CHIP 10K 1/16W(1608)
R1546	1-218-716-11	s	RESISTOR,CHIP 10K 1/16W(1608)
R1547	1-218-716-11	s	RESISTOR,CHIP 10K 1/16W(1608)
R1548	1-218-716-11	s	RESISTOR,CHIP 10K 1/16W(1608)
R1549	1-218-716-11	s	RESISTOR,CHIP 10K 1/16W(1608)
R1550	1-218-716-11	s	RESISTOR,CHIP 10K 1/16W(1608)
R1551	1-218-722-11	s	RESISTOR,CHIP 18K 1/16W 1608
R1552	1-218-722-11	s	RESISTOR,CHIP 18K 1/16W 1608
R1553	1-218-716-11	s	RESISTOR,CHIP 10K 1/16W(1608)
R1554	1-218-716-11	s	RESISTOR,CHIP 10K 1/16W(1608)
R1555	1-218-668-11	s	RESISTOR,CHIP 100 1/16W (1608)
R1556	1-218-702-11	s	RESISTOR CHIP 2.7K 1/16W(1608)
R1557	1-216-864-11	s	RESISTOR,CHIP 0 1/16W (1608)
R1558	1-218-728-11	s	RESISTOR,METAL 33K 1/16W
R1559	1-218-700-11	s	RESISTOR,CHIP 2.2K 1/16W(1608)
R1560	1-218-684-11	s	RESISTOR CHIP 470 1/16W (1608)
R1561	1-218-684-11	s	RESISTOR CHIP 470 1/16W (1608)
R1562	1-218-692-11	s	RESISTOR,CHIP 1.0K 1/16W(1608)
R1563	1-218-684-11	s	RESISTOR CHIP 470 1/16W (1608)
R1564	1-218-719-11	s	RESISTOR,METAL 13K 1/16
R1565	1-218-722-11	s	RESISTOR,CHIP 18K 1/16W 1608
R1566	1-218-718-11	s	RESISTOR CHIP 12K 1/16W (1608)
R1567	1-216-863-11	s	RESISTOR,CHIP 3.3M 1/16W 1608
R1568	1-218-684-11	s	RESISTOR CHIP 470 1/16W (1608)
R1569	1-218-716-11	s	RESISTOR,CHIP 10K 1/16W(1608)
R1570	1-218-716-11	s	RESISTOR,CHIP 10K 1/16W(1608)

(DM-114P BOARD)

Ref. No. or Q'ty	Part No.	SP	Description
R1571	1-218-676-11	s	RESISTOR,CHIP 220 1/16W(1608)
R1572	1-218-676-11	s	RESISTOR,CHIP 220 1/16W(1608)
R1573	1-218-716-11	s	RESISTOR,CHIP 10K 1/16W(1608)
R1574	1-218-701-11	s	RESISTOR,CHIP 2.4K 1/16W(1608)
R1575	1-218-676-11	s	RESISTOR,CHIP 220 1/16W(1608)
R1576	1-216-855-11	s	RESISTOR,CHIP 680K 1/16W 1608
R1577	1-218-716-11	s	RESISTOR,CHIP 10K 1/16W(1608)
R1578	1-218-702-11	s	RESISTOR CHIP 2.7K 1/16W(1608)
R1579	1-218-666-11	s	RESISTOR CHIP 82 1/16W (1608)
R1580	1-218-692-11	s	RESISTOR,CHIP 1.0K 1/16W(1608)
R1581	1-218-716-11	s	RESISTOR,CHIP 10K 1/16W(1608)
R1582	1-218-732-11	s	RESISTOR,CHIP 47K 1/16W(1608)
R1583	1-218-701-11	s	RESISTOR,CHIP 2.4K 1/16W(1608)
R1584	1-218-696-11	s	RESISTOR CHIP 1.5K 1/16W(1608)
R1585	1-216-857-11	s	RESISTOR,CHIP 1.0M 1/16W 1608
R1586	1-218-708-11	s	RESISTOR,CHIP 4.7K 1/16W(1608)
R1587	1-218-684-11	s	RESISTOR CHIP 470 1/16W (1608)
R1588	1-218-676-11	s	RESISTOR,CHIP 220 1/16W(1608)
R1589	1-218-676-11	s	RESISTOR,CHIP 220 1/16W(1608)
R1590	1-218-704-11	s	RESISTOR,CHIP 3.3K 1/16W(1608)
R1591	1-218-716-11	s	RESISTOR,CHIP 10K 1/16W(1608)
R1592	1-218-716-11	s	RESISTOR,CHIP 10K 1/16W(1608)
R1593	1-218-700-11	s	RESISTOR,CHIP 2.2K 1/16W(1608)
R1594	1-218-718-11	s	RESISTOR CHIP 12K 1/16W (1608)
R1595	1-218-676-11	s	RESISTOR,CHIP 220 1/16W(1608)
R1596	1-218-676-11	s	RESISTOR,CHIP 220 1/16W(1608)
R1597	1 218 680 11	s	RESISTOR,CHIP 330 1/16W(1608)
R1598	1-218-668-11	s	RESISTOR,CHIP 100 1/16W (1608)
R1599	1-218-702-11	s	RESISTOR CHIP 2.7K 1/16W(1608)
R1600	1-218-676-11	s	RESISTOR,CHIP 220 1/16W(1608)
R1601	1-218-680-11	s	RESISTOR,CHIP 330 1/16W(1608)
R1602	1-218-704-11	s	RESISTOR,CHIP 3.3K 1/16W(1608)
R1603	1-218-700-11	s	RESISTOR,CHIP 2.2K 1/16W(1608)
R1604	1-218-668-11	s	RESISTOR,CHIP 100 1/16W (1608)
R1605	1-218-703-11	s	RESISTOR,METAL 3.0K 1/16(1608)
R1606	1-218-718-11	s	RESISTOR CHIP 12K 1/16W (1608)
R1607	1-218-732-11	s	RESISTOR,CHIP 47K 1/16W(1608)
R1608	1-218-732-11	s	RESISTOR,CHIP 47K 1/16W(1608)
R1609	1-218-700-11	s	RESISTOR,CHIP 2.2K 1/16W(1608)
R1610	1-218-700-11	s	RESISTOR,CHIP 2.2K 1/16W(1608)
R1611	1-218-704-11	s	RESISTOR,CHIP 3.3K 1/16W(1608)
R1612	1-218-752-11	s	RESISTOR,CHIP 330K 1/16W(1608)
R1613	1-218-704-11	s	RESISTOR,CHIP 3.3K 1/16W(1608)
R1614	1-218-700-11	s	RESISTOR,CHIP 2.2K 1/16W(1608)
R1615	1-218-716-11	s	RESISTOR,CHIP 10K 1/16W(1608)
R1616	1-218-736-11	s	RESISTOR,CHIP 68K 1/16W(1608)
R1617	1-218-716-11	s	RESISTOR,CHIP 10K 1/16W(1608)
R1618	1-218-668-11	s	RESISTOR,CHIP 100 1/16W (1608)
R1619	1-218-704-11	s	RESISTOR,CHIP 3.3K 1/16W(1608)
R1620	1-218-692-11	s	RESISTOR,CHIP 1.0K 1/16W(1608)
R1621	1-218-692-11	s	RESISTOR,CHIP 1.0K 1/16W(1608)
R1622	1-218-722-11	s	RESISTOR,CHIP 18K 1/16W 1608
R1623	1-218-716-11	s	RESISTOR,CHIP 10K 1/16W(1608)
R1624	1-218-692-11	s	RESISTOR,CHIP 1.0K 1/16W(1608)
R1625	1-218-680-11	s	RESISTOR,CHIP 330 1/16W(1608)
R1626	1-218-708-11	s	RESISTOR,CHIP 4.7K 1/16W(1608)
R1627	1-218-704-11	s	RESISTOR,CHIP 3.3K 1/16W(1608)
R1628	1-218-724-11	s	RESISTOR,CHIP 22K 1/16W(1608)
R1629	1-218-725-11	s	RESISTOR,CHIP 24K 1/16W(1608)

(DM-114P BOARD)

Ref. No. or Q'ty	Part No.	SP	Description
R1630	1-218-699-11	s	RESISTOR CHIP 2.0K 1/16W(1608)
R1631	1-218-692-11	s	RESISTOR,CHIP 1.0K 1/16W(1608)
R1632	1-218-696-11	s	RESISTOR CHIP 1.5K 1/16W(1608)
R1633	1-218-708-11	s	RESISTOR,CHIP 4.7K 1/16W(1608)
R1634	1-216-864-11	s	RESISTOR,CHIP 0 1/16W (1608)
R1635	1-218-708-11	s	RESISTOR,CHIP 4.7K 1/16W(1608)
R1636	1-218-660-91	s	RESISTOR CHIP 47 1/16W (1608)
R1637	1-218-676-11	s	RESISTOR,CHIP 220 1/16W(1608)
R1638	1-218-676-11	s	RESISTOR,CHIP 220 1/16W(1608)
R1639	1-218-660-91	s	RESISTOR CHIP 47 1/16W (1608)
R1640	1-218-660-91	s	RESISTOR CHIP 47 1/16W (1608)
R1641	1-218-668-11	s	RESISTOR,CHIP 100 1/16W (1608)
R1642	1-218-668-11	s	RESISTOR,CHIP 100 1/16W (1608)
R1643	1-218-668-11	s	RESISTOR,CHIP 100 1/16W (1608)
R1644	1-218-668-11	s	RESISTOR,CHIP 100 1/16W (1608)
R1645	1-218-668-11	s	RESISTOR,CHIP 100 1/16W (1608)
R1649	1-218-708-11	s	RESISTOR,CHIP 4.7K 1/16W(1608)
R1651	1-216-864-11	s	RESISTOR,CHIP 0 1/16W (1608)
R1702	1-218-660-91	s	RESISTOR CHIP 47 1/16W (1608)
R1703	1-218-660-91	s	RESISTOR CHIP 47 1/16W (1608)
R1704	1-218-660-91	s	RESISTOR CHIP 47 1/16W (1608)
R1705	1-218-660-91	s	RESISTOR CHIP 47 1/16W (1608)
R1706	1-218-668-11	s	RESISTOR,CHIP 100 1/16W (1608)
R1707	1-218-668-11	s	RESISTOR,CHIP 100 1/16W (1608)
R1708	1-218-700-11	s	RESISTOR,CHIP 2.2K 1/16W(1608)
R1709	1-218-700-11	s	RESISTOR,CHIP 2.2K 1/16W(1608)
R1710	1 218 716 11	s	RESISTOR,CHIP 10K 1/16W(1608)
R1711	1-218-660-91	s	RESISTOR CHIP 47 1/16W (1608)
R1712	1-218-660-91	s	RESISTOR CHIP 47 1/16W (1608)
R1713	1-218-660-91	s	RESISTOR CHIP 47 1/16W (1608)
R1714	1-218-660-91	s	RESISTOR CHIP 47 1/16W (1608)
R1715	1-218-660-91	s	RESISTOR CHIP 47 1/16W (1608)
R1716	1-218-660-91	s	RESISTOR CHIP 47 1/16W (1608)
R1717	1-216-864-11	s	RESISTOR,CHIP 0 1/16W (1608)
R1719	1-218-668-11	s	RESISTOR,CHIP 100 1/16W (1608)
R1720	1-218-740-11	s	RESISTOR,CHIP 100K 1/16W(1608)
R1722	1-216-864-11	s	RESISTOR,CHIP 0 1/16W (1608)
R1724	1-218-668-11	s	RESISTOR,CHIP 100 1/16W (1608)
R1725	1-218-740-11	s	RESISTOR,CHIP 100K 1/16W(1608)
R1726	1-218-740-11	s	RESISTOR,CHIP 100K 1/16W(1608)
R1727	1-218-660-91	s	RESISTOR CHIP 47 1/16W (1608)
R1728	1-218-660-91	s	RESISTOR CHIP 47 1/16W (1608)
R1731	1-218-668-11	s	RESISTOR,CHIP 100 1/16W (1608)
R1732	1-218-668-11	s	RESISTOR,CHIP 100 1/16W (1608)
R1733	1-218-700-11	s	RESISTOR,CHIP 2.2K 1/16W(1608)
R1734	1-218-740-11	s	RESISTOR,CHIP 100K 1/16W(1608)
R1737	1-218-736-11	s	RESISTOR,CHIP 68K 1/16W(1608)
R1738	1-218-708-11	s	RESISTOR,CHIP 4.7K 1/16W(1608)
R1800	1-218-740-11	s	RESISTOR,CHIP 100K 1/16W(1608)
R1801	1-218-740-11	s	RESISTOR,CHIP 100K 1/16W(1608)
R1802	1-218-740-11	s	RESISTOR,CHIP 100K 1/16W(1608)
R1803	1-218-740-11	s	RESISTOR,CHIP 100K 1/16W(1608)
R1804	1-218-740-11	s	RESISTOR,CHIP 100K 1/16W(1608)
R1805	1-218-740-11	s	RESISTOR,CHIP 100K 1/16W(1608)
R1806	1-218-676-11	s	RESISTOR,CHIP 220 1/16W(1608)
R1807	1-218-660-91	s	RESISTOR CHIP 47 1/16W (1608)
R1808	1-218-676-11	s	RESISTOR,CHIP 220 1/16W(1608)
R1809	1-218-660-91	s	RESISTOR CHIP 47 1/16W (1608)
R1810	1-218-676-11	s	RESISTOR,CHIP 220 1/16W(1608)

(DM-114P BOARD)

Ref. No. or Q'ty	Part No.	SP	Description
R1811	1-218-676-11	s	RESISTOR,CHIP 220 1/16W(1608)
R1812	1-218-676-11	s	RESISTOR,CHIP 220 1/16W(1608)
R1813	1-218-660-91	s	RESISTOR CHIP 47 1/16W (1608)
R1814	1-218-692-11	s	RESISTOR,CHIP 1.0K 1/16W(1608)
R1815	1-218-660-91	s	RESISTOR CHIP 47 1/16W (1608)
R1816	1-218-660-91	s	RESISTOR CHIP 47 1/16W (1608)
R1817	1-218-660-91	s	RESISTOR CHIP 47 1/16W (1608)
R1818	1-216-864-11	s	RESISTOR,CHIP 0 1/16W (1608)
R1820	1-218-732-11	s	RESISTOR,CHIP 47K 1/16W(1608)
R1821	1-218-660-91	s	RESISTOR CHIP 47 1/16W (1608)
R1822	1-218-732-11	s	RESISTOR,CHIP 47K 1/16W(1608)
R1823	1-218-740-11	s	RESISTOR,CHIP 100K 1/16W(1608)
R1824	1-218-684-11	s	RESISTOR CHIP 470 1/16W (1608)
R1825	1-218-660-91	s	RESISTOR CHIP 47 1/16W (1608)
R1826	1-218-692-11	s	RESISTOR,CHIP 1.0K 1/16W(1608)
R1828	1-218-692-11	s	RESISTOR,CHIP 1.0K 1/16W(1608)
R1829	1-218-692-11	s	RESISTOR,CHIP 1.0K 1/16W(1608)
R1831	1-218-700-11	s	RESISTOR,CHIP 2.2K 1/16W(1608)
R1832	1-218-692-11	s	RESISTOR,CHIP 1.0K 1/16W(1608)
R1833	1-218-692-11	s	RESISTOR,CHIP 1.0K 1/16W(1608)
R1834	1-218-668-11	s	RESISTOR,CHIP 100 1/16W (1608)
R1835	1-218-692-11	s	RESISTOR,CHIP 1.0K 1/16W(1608)
R1836	1-218-716-11	s	RESISTOR,CHIP 10K 1/16W(1608)
R1837	1-218-676-11	s	RESISTOR,CHIP 220 1/16W(1608)
R1840	1-218-692-11	s	RESISTOR,CHIP 1.0K 1/16W(1608)
R1841	1-218-676-11	s	RESISTOR,CHIP 220 1/16W(1608)
R1842	1 218 676 11	s	RESISTOR,CHIP 220 1/16W(1608)
R1843	1-218-676-11	s	RESISTOR,CHIP 220 1/16W(1608)
R1844	1-218-676-11	s	RESISTOR,CHIP 220 1/16W(1608)
R1846	1-216-864-11	s	RESISTOR,CHIP 0 1/16W (1608)
R1848	1-218-676-11	s	RESISTOR,CHIP 220 1/16W(1608)
R1852	1-218-716-11	s	RESISTOR,CHIP 10K 1/16W(1608)
R1854	1-218-740-11	s	RESISTOR,CHIP 100K 1/16W(1608)
R1855	1-218-692-11	s	RESISTOR,CHIP 1.0K 1/16W(1608)
R1856	1-218-740-11	s	RESISTOR,CHIP 100K 1/16W(1608)
R1857	1-218-740-11	s	RESISTOR,CHIP 100K 1/16W(1608)
R1858	1-218-740-11	s	RESISTOR,CHIP 100K 1/16W(1608)
R1859	1-218-716-11	s	RESISTOR,CHIP 10K 1/16W(1608)
R1860	1-218-732-11	s	RESISTOR,CHIP 47K 1/16W(1608)
R1861	1-218-716-11	s	RESISTOR,CHIP 10K 1/16W(1608)
R1862	1-218-716-11	s	RESISTOR,CHIP 10K 1/16W(1608)
R1863	1-218-680-11	s	RESISTOR,CHIP 330 1/16W(1608)
R1864	1-218-680-11	s	RESISTOR,CHIP 330 1/16W(1608)
R1865	1-218-716-11	s	RESISTOR,CHIP 10K 1/16W(1608)
R1867	1-218-732-11	s	RESISTOR,CHIP 47K 1/16W(1608)
R1868	1-218-692-11	s	RESISTOR,CHIP 1.0K 1/16W(1608)
R1869	1-218-692-11	s	RESISTOR,CHIP 1.0K 1/16W(1608)
R1870	1-218-708-11	s	RESISTOR,CHIP 4.7K 1/16W(1608)
R1871	1-218-732-11	s	RESISTOR,CHIP 47K 1/16W(1608)
R1872	1-218-716-11	s	RESISTOR,CHIP 10K 1/16W(1608)
R1873	1-218-740-11	s	RESISTOR,CHIP 100K 1/16W(1608)
R1874	1-218-716-11	s	RESISTOR,CHIP 10K 1/16W(1608)
R1875	1-218-740-11	s	RESISTOR,CHIP 100K 1/16W(1608)
R1876	1-218-676-11	s	RESISTOR,CHIP 220 1/16W(1608)
R1877	1-218-740-11	s	RESISTOR,CHIP 100K 1/16W(1608)
R1878	1-218-723-11	s	RESISTOR,CHIP 20K 1/16W(1608)
R1879	1-218-708-11	s	RESISTOR,CHIP 4.7K 1/16W(1608)
R1880	1-218-660-91	s	RESISTOR CHIP 47 1/16W (1608)
R1881	1-218-723-11	s	RESISTOR,CHIP 20K 1/16W(1608)

(DM-114P BOARD)

Ref. No. or Q'ty	Part No.	SP	Description
R1882	1-218-700-11	s	RESISTOR,CHIP 2.2K 1/16W(1608)
R1883	1-218-706-11	s	RESISTOR,CHIP 3.9K 1/16W(1608)
R1884	1-218-700-11	s	RESISTOR,CHIP 2.2K 1/16W(1608)
R1885	1-218-700-11	s	RESISTOR,CHIP 2.2K 1/16W(1608)
R1886	1-218-660-91	s	RESISTOR CHIP 47 1/16W (1608)
R1887	1-218-692-11	s	RESISTOR,CHIP 1.0K 1/16W(1608)
R1888	1-218-748-11	s	RESISTOR,CHIP 220K 1/16W(1608)
R1889	1-218-748-11	s	RESISTOR,CHIP 220K 1/16W(1608)
R1890	1-218-716-11	s	RESISTOR,CHIP 10K 1/16W(1608)
R1891	1-218-724-11	s	RESISTOR,CHIP 22K 1/16W(1608)
R1892	1-218-728-11	s	RESISTOR,METAL 33K 1/16W
R1893	1-218-720-11	s	RESISTOR,CHIP 15K 1/16W(1608)
R1894	1-218-660-91	s	RESISTOR CHIP 47 1/16W (1608)
R1895	1-216-864-11	s	RESISTOR,CHIP 0 1/16W (1608)
R1896	1-218-716-11	s	RESISTOR,CHIP 10K 1/16W(1608)
R1897	1-218-668-11	s	RESISTOR,CHIP 100 1/16W (1608)
R1898	1-218-692-11	s	RESISTOR,CHIP 1.0K 1/16W(1608)
R1899	1-218-722-11	s	RESISTOR,CHIP 18K 1/16W 1608
R1900	1-218-722-11	s	RESISTOR,CHIP 18K 1/16W 1608
R1901	1-216-864-11	s	RESISTOR,CHIP 0 1/16W (1608)
R1902	1-218-700-11	s	RESISTOR,CHIP 2.2K 1/16W(1608)
R1903	1-218-700-11	s	RESISTOR,CHIP 2.2K 1/16W(1608)
R1904	1-218-700-11	s	RESISTOR,CHIP 2.2K 1/16W(1608)
R1905	1-218-700-11	s	RESISTOR,CHIP 2.2K 1/16W(1608)
R1906	1-218-716-11	s	RESISTOR,CHIP 10K 1/16W(1608)
R1907	1-218-706-11	s	RESISTOR,CHIP 3.9K 1/16W(1608)
R1908	1 218 706 11	s	RESISTOR,CHIP 3.9K 1/16W(1608)
R1909	1-218-668-11	s	RESISTOR,CHIP 100 1/16W (1608)
R1910	1-218-706-11	s	RESISTOR,CHIP 3.9K 1/16W(1608)
R1911	1-218-692-11	s	RESISTOR,CHIP 1.0K 1/16W(1608)
R1912	1-218-692-11	s	RESISTOR,CHIP 1.0K 1/16W(1608)
R1913	1-218-735-11	s	RESISTOR CHIP 62K 1/16W(1608)
R1914	1-218-740-11	s	RESISTOR,CHIP 100K 1/16W(1608)
R1915	1-216-864-11	s	RESISTOR,CHIP 0 1/16W (1608)
R1916	1-216-864-11	s	RESISTOR,CHIP 0 1/16W (1608)
R1923	1-218-668-11	s	RESISTOR,CHIP 100 1/16W (1608)
R1924	1-218-740-11	s	RESISTOR,CHIP 100K 1/16W(1608)
R1925	1-218-740-11	s	RESISTOR,CHIP 100K 1/16W(1608)
R1926	1-218-740-11	s	RESISTOR,CHIP 100K 1/16W(1608)
RB1801	1-239-309-11	s	RESISTOR ARRAY,CHIP 100K
RB1802	1-239-412-11	s	NETWORK, RESISTOR 100 (1608)
RB1803	1-239-412-11	s	NETWORK, RESISTOR 100 (1608)
RB1808	1-239-412-11	s	NETWORK, RESISTOR 100 (1608)
RB1809	1-239-412-11	s	NETWORK, RESISTOR 100 (1608)
RB1810	1-239-412-11	s	NETWORK, RESISTOR 100 (1608)
RB1811	1-239-412-11	s	NETWORK, RESISTOR 100 (1608)
RV101	1-237-033-11	s	RESISTOR,ADJ,CERMET 1K
RV102	1-237-033-11	s	RESISTOR,ADJ,CERMET 1K
RV104	1-237-033-11	s	RESISTOR,ADJ,CERMET 1K
RV105	1-237-037-11	s	RESISTOR,ADJ,CERMET 20K
RV106	1-237-037-11	s	RESISTOR,ADJ,CERMET 20K
RV107	1-237-037-11	s	RESISTOR,ADJ,CERMET 20K
RV108	1-237-037-11	s	RESISTOR,ADJ,CERMET 20K
RV109	1-237-031-11	s	RESISTOR,ADJ,CERMET 200
RV110	1-237-031-11	s	RESISTOR,ADJ,CERMET 200
RV111	1-237-034-11	s	RESISTOR,ADJ,CERMET 2K
RV112	1-237-034-11	s	RESISTOR,ADJ,CERMET 2K
RV113	1-237-037-11	s	RESISTOR,ADJ,CERMET 20K

http://getMANUAL.com

(DM-114P BOARD)

Ref. No. or Q'ty	Part No.	SP	Description
RV301	1-237-033-11	s	RESISTOR,ADJ,CERMET 1K
RV302	1-237-033-11	s	RESISTOR,ADJ,CERMET 1K
RV303	1-237-033-11	s	RESISTOR,ADJ,CERMET 1K
RV304	1-237-033-11	s	RESISTOR,ADJ,CERMET 1K
RV305	1-237-037-11	s	RESISTOR,ADJ,CERMET 20K
RV306	1-237-037-11	s	RESISTOR,ADJ,CERMET 20K
RV307	1-237-037-11	s	RESISTOR,ADJ,CERMET 20K
RV308	1-237-037-11	s	RESISTOR,ADJ,CERMET 20K
RV309	1-237-031-11	s	RESISTOR,ADJ,CERMET 200
RV310	1-237-031-11	s	RESISTOR,ADJ,CERMET 200
RV311	1-237-034-11	s	RESISTOR,ADJ,CERMET 2K
RV312	1-237-034-11	s	RESISTOR,ADJ,CERMET 2K
RV313	1-237-037-11	s	RESISTOR,ADJ,CERMET 20K
RV501	1-237-036-11	s	RESISTOR,ADJ,CERMET 10K
RV502	1-237-036-11	s	RESISTOR,ADJ,CERMET 10K
RV503	1-237-033-11	s	RESISTOR,ADJ,CERMET 1K
RV504	1-237-033-11	s	RESISTOR,ADJ,CERMET 1K
RV505	1-237-034-11	s	RESISTOR,ADJ,CERMET 2K
RV506	1-237-036-11	s	RESISTOR,ADJ,CERMET 10K
RV701	1-237-036-11	s	RESISTOR,ADJ,CERMET 10K
RV702	1-237-036-11	s	RESISTOR,ADJ,CERMET 10K
RV703	1-237-033-11	s	RESISTOR,ADJ,CERMET 1K
RV704	1-237-033-11	s	RESISTOR,ADJ,CERMET 1K
RV1101	1-237-032-11	s	RESISTOR,ADJ,CERMET 500
RV1201	1-237-032-11	s	RESISTOR,ADJ,CERMET 500
RV1301	1-237-038-11	s	RESISTOR,ADJ,CERMET 50K
RV1401	1-237-036-11	s	RESISTOR,ADJ,CERMET 10K
RV1402	1-237-034-11	s	RESISTOR,ADJ,CERMET 2K
RV1410	1-237-035-11	s	RESISTOR,ADJ,CERMET 5K
RV1411	1-237-035-11	s	RESISTOR,ADJ,CERMET 5K
RV1501	1-237-038-11	s	RESISTOR,ADJ,CERMET 50K
RV1601	1-237-035-11	s	RESISTOR,ADJ,CERMET 5K
RV1602	1-237-036-11	s	RESISTOR,ADJ,CERMET 10K
RV1603	1-237-036-11	s	RESISTOR,ADJ,CERMET 10K
RV1604	1-237-036-11	s	RESISTOR,ADJ,CERMET 10K
RV1605	1-237-034-11	s	RESISTOR,ADJ,CERMET 2K
RV1606	1-237-033-11	s	RESISTOR,ADJ,CERMET 1K
RV1801	1-237-037-11	s	RESISTOR,ADJ,CERMET 20K
S101	1-571-275-31	s	SWITCH, SLIDE (1-1-2)
S301	1-571-275-31	s	SWITCH, SLIDE (1-1-2)
S501	1-571-275-31	s	SWITCH, SLIDE (1-1-2)
S901	1-692-270-41	s	SWITCH, SLIDE
S1701	1-692-271-31	s	SWITCH, SLIDE
S1801	1-692-270-41	s	SWITCH, SLIDE
X301	1-579-990-11	s	VIBRATOR, CERAMIC
X302	1-579-988-11	s	VIBRATOR, CERAMIC
X901	1-767-717-11	s	VIBRATOR, CRYSTAL
X1801	1-767-717-11	s	VIBRATOR, CRYSTAL

DPR-87 BOARD

Ref. No. or Q'ty	Part No.	SP	Description
1pc	A-8316-710-A	o	MOUNTED CIRCUIT BOARD, DPR-87
2pcs	3-603-737-01	o	LEVER,BOARD
5pcs	3-729-061-01	s	SCREW (M2X4.5) (TYPE 1)(STEEL)
C1	1-107-826-11	s	CAPACITOR,CHIP CERAMIC 0.1MF
C2	1-107-826-11	s	CAPACITOR,CHIP CERAMIC 0.1MF
C3	1-107-826-11	s	CAPACITOR,CHIP CERAMIC 0.1MF
C4	1-107-826-11	s	CAPACITOR,CHIP CERAMIC 0.1MF
C5	1-107-826-11	s	CAPACITOR,CHIP CERAMIC 0.1MF
C6	1-107-826-11	s	CAPACITOR,CHIP CERAMIC 0.1MF
C7	1-107-826-11	s	CAPACITOR,CHIP CERAMIC 0.1MF
C8	1-107-826-11	s	CAPACITOR,CHIP CERAMIC 0.1MF
C9	1-107-826-11	s	CAPACITOR,CHIP CERAMIC 0.1MF
C10	1-107-826-11	s	CAPACITOR,CHIP CERAMIC 0.1MF
C11	1-107-826-11	s	CAPACITOR,CHIP CERAMIC 0.1MF
C12	1-107-826-11	s	CAPACITOR,CHIP CERAMIC 0.1MF
C13	1-107-826-11	s	CAPACITOR,CHIP CERAMIC 0.1MF
C14	1-107-826-11	s	CAPACITOR,CHIP CERAMIC 0.1MF
C15	1-162-927-11	s	CAPACITOR,CERAMIC 100PF/50V CH
C16	1-107-826-11	s	CAPACITOR,CHIP CERAMIC 0.1MF
C17	1-107-826-11	s	CAPACITOR,CHIP CERAMIC 0.1MF
C18	1-107-826-11	s	CAPACITOR,CHIP CERAMIC 0.1MF
C19	1-107-826-11	s	CAPACITOR,CHIP CERAMIC 0.1MF
C20	1-115-169-11	s	CAPACITOR,TANTAL (SMD) 10MF
C21	1-115-169-11	s	CAPACITOR,TANTAL (SMD) 10MF
C22	1-107-826-11	s	CAPACITOR,CHIP CERAMIC 0.1MF
C23	1-107-826-11	s	CAPACITOR,CHIP CERAMIC 0.1MF
C25	1-107-826-11	s	CAPACITOR,CHIP CERAMIC 0.1MF
C26	1-107-826-11	s	CAPACITOR,CHIP CERAMIC 0.1MF
C27	1-107-826-11	s	CAPACITOR,CHIP CERAMIC 0.1MF
C28	1-107-826-11	s	CAPACITOR,CHIP CERAMIC 0.1MF
C29	1-107-826-11	s	CAPACITOR,CHIP CERAMIC 0.1MF
C30	1-107-826-11	s	CAPACITOR,CHIP CERAMIC 0.1MF
C31	1-107-826-11	s	CAPACITOR,CHIP CERAMIC 0.1MF
C32	1-107-826-11	s	CAPACITOR,CHIP CERAMIC 0.1MF
C33	1-107-826-11	s	CAPACITOR,CHIP CERAMIC 0.1MF
C34	1-107-826-11	s	CAPACITOR,CHIP CERAMIC 0.1MF
C35	1-107-826-11	s	CAPACITOR,CHIP CERAMIC 0.1MF
C36	1-107-826-11	s	CAPACITOR,CHIP CERAMIC 0.1MF
C37	1-107-826-11	s	CAPACITOR,CHIP CERAMIC 0.1MF
C38	1-107-826-11	s	CAPACITOR,CHIP CERAMIC 0.1MF
C39	1-107-826-11	s	CAPACITOR,CHIP CERAMIC 0.1MF
C40	1-107-826-11	s	CAPACITOR,CHIP CERAMIC 0.1MF
C41	1-107-826-11	s	CAPACITOR,CHIP CERAMIC 0.1MF
C42	1-107-826-11	s	CAPACITOR,CHIP CERAMIC 0.1MF
C43	1-107-826-11	s	CAPACITOR,CHIP CERAMIC 0.1MF
C44	1-107-826-11	s	CAPACITOR,CHIP CERAMIC 0.1MF
C45	1-107-826-11	s	CAPACITOR,CHIP CERAMIC 0.1MF
C46	1-107-826-11	s	CAPACITOR,CHIP CERAMIC 0.1MF
C47	1-107-826-11	s	CAPACITOR,CHIP CERAMIC 0.1MF
C48	1-107-826-11	s	CAPACITOR,CHIP CERAMIC 0.1MF
C49	1-107-826-11	s	CAPACITOR,CHIP CERAMIC 0.1MF
C50	1-107-826-11	s	CAPACITOR,CHIP CERAMIC 0.1MF
C51	1-107-826-11	s	CAPACITOR,CHIP CERAMIC 0.1MF
C52	1-107-826-11	s	CAPACITOR,CHIP CERAMIC 0.1MF
C53	1-107-826-11	s	CAPACITOR,CHIP CERAMIC 0.1MF
C54	1-107-826-11	s	CAPACITOR,CHIP CERAMIC 0.1MF
C55	1-107-826-11	s	CAPACITOR,CHIP CERAMIC 0.1MF
C56	1-107-826-11	s	CAPACITOR,CHIP CERAMIC 0.1MF

(DPR-87 BOARD)

Ref. No. or Q'ty	Part No.	SP	Description
C57	1-107-826-11	s	CAPACITOR,CHIP CERAMIC 0.1MF
C58	1-107-826-11	s	CAPACITOR,CHIP CERAMIC 0.1MF
C59	1-107-826-11	s	CAPACITOR,CHIP CERAMIC 0.1MF
C60	1-107-826-11	s	CAPACITOR,CHIP CERAMIC 0.1MF
C61	1-107-826-11	s	CAPACITOR,CHIP CERAMIC 0.1MF
C62	1-107-826-11	s	CAPACITOR,CHIP CERAMIC 0.1MF
C63	1-107-826-11	s	CAPACITOR,CHIP CERAMIC 0.1MF
C64	1-107-826-11	s	CAPACITOR,CHIP CERAMIC 0.1MF
C65	1-107-826-11	s	CAPACITOR,CHIP CERAMIC 0.1MF
C66	1-107-826-11	s	CAPACITOR,CHIP CERAMIC 0.1MF
C67	1-107-826-11	s	CAPACITOR,CHIP CERAMIC 0.1MF
C68	1-107-826-11	s	CAPACITOR,CHIP CERAMIC 0.1MF
C69	1-107-826-11	s	CAPACITOR,CHIP CERAMIC 0.1MF
C70	1-107-826-11	s	CAPACITOR,CHIP CERAMIC 0.1MF
C71	1-107-826-11	s	CAPACITOR,CHIP CERAMIC 0.1MF
C72	1-107-826-11	s	CAPACITOR,CHIP CERAMIC 0.1MF
C73	1-107-826-11	s	CAPACITOR,CHIP CERAMIC 0.1MF
C74	1-107-826-11	s	CAPACITOR,CHIP CERAMIC 0.1MF
C75	1-107-826-11	s	CAPACITOR,CHIP CERAMIC 0.1MF
C76	1-107-826-11	s	CAPACITOR,CHIP CERAMIC 0.1MF
C77	1-107-826-11	s	CAPACITOR,CHIP CERAMIC 0.1MF
C78	1-107-826-11	s	CAPACITOR,CHIP CERAMIC 0.1MF
C79	1-107-826-11	s	CAPACITOR,CHIP CERAMIC 0.1MF
C80	1-107-826-11	s	CAPACITOR,CHIP CERAMIC 0.1MF
C81	1-107-826-11	s	CAPACITOR,CHIP CERAMIC 0.1MF
C82	1-107-826-11	s	CAPACITOR,CHIP CERAMIC 0.1MF
C83	1-107-826-11	s	CAPACITOR,CHIP CERAMIC 0.1MF
C84	1-107-826-11	s	CAPACITOR,CHIP CERAMIC 0.1MF
C85	1-107-826-11	s	CAPACITOR,CHIP CERAMIC 0.1MF
C86	1-107-826-11	s	CAPACITOR,CHIP CERAMIC 0.1MF
C87	1-107-826-11	s	CAPACITOR,CHIP CERAMIC 0.1MF
C88	1-107-826-11	s	CAPACITOR,CHIP CERAMIC 0.1MF
C89	1-107-826-11	s	CAPACITOR,CHIP CERAMIC 0.1MF
C90	1-107-826-11	s	CAPACITOR,CHIP CERAMIC 0.1MF
C91	1-107-826-11	s	CAPACITOR,CHIP CERAMIC 0.1MF
C92	1-107-826-11	s	CAPACITOR,CHIP CERAMIC 0.1MF
C93	1-107-826-11	s	CAPACITOR,CHIP CERAMIC 0.1MF
C94	1-115-169-11	s	CAPACITOR,TANTAL (SMD) 10MF
C95	1-107-826-11	s	CAPACITOR,CHIP CERAMIC 0.1MF
C96	1-107-826-11	s	CAPACITOR,CHIP CERAMIC 0.1MF
C97	1-107-826-11	s	CAPACITOR,CHIP CERAMIC 0.1MF
C98	1-107-826-11	s	CAPACITOR,CHIP CERAMIC 0.1MF
C99	1-107-826-11	s	CAPACITOR,CHIP CERAMIC 0.1MF
C100	1-107-826-11	s	CAPACITOR,CHIP CERAMIC 0.1MF
C101	1-107-826-11	s	CAPACITOR,CHIP CERAMIC 0.1MF
C102	1-107-826-11	s	CAPACITOR,CHIP CERAMIC 0.1MF
C103	1-107-826-11	s	CAPACITOR,CHIP CERAMIC 0.1MF
C104	1-107-826-11	s	CAPACITOR,CHIP CERAMIC 0.1MF
C105	1-107-826-11	s	CAPACITOR,CHIP CERAMIC 0.1MF
C106	1-107-826-11	s	CAPACITOR,CHIP CERAMIC 0.1MF
C107	1-107-826-11	s	CAPACITOR,CHIP CERAMIC 0.1MF
C108	1-107-826-11	s	CAPACITOR,CHIP CERAMIC 0.1MF
C109	1-107-826-11	s	CAPACITOR,CHIP CERAMIC 0.1MF
C110	1-107-826-11	s	CAPACITOR,CHIP CERAMIC 0.1MF
C111	1-107-826-11	s	CAPACITOR,CHIP CERAMIC 0.1MF
C112	1-107-826-11	s	CAPACITOR,CHIP CERAMIC 0.1MF
C113	1-107-826-11	s	CAPACITOR,CHIP CERAMIC 0.1MF
C114	1-107-826-11	s	CAPACITOR,CHIP CERAMIC 0.1MF
C116	1-107-826-11	s	CAPACITOR,CHIP CERAMIC 0.1MF

(DPR-87 BOARD)

Ref. No. or Q'ty	Part No.	SP	Description
C117	1-107-826-11	s	CAPACITOR,CHIP CERAMIC 0.1MF
C118	1-107-826-11	s	CAPACITOR,CHIP CERAMIC 0.1MF
C119	1-107-826-11	s	CAPACITOR,CHIP CERAMIC 0.1MF
C120	1-107-826-11	s	CAPACITOR,CHIP CERAMIC 0.1MF
C121	1-107-826-11	s	CAPACITOR,CHIP CERAMIC 0.1MF
C122	1-107-826-11	s	CAPACITOR,CHIP CERAMIC 0.1MF
C123	1-107-826-11	s	CAPACITOR,CHIP CERAMIC 0.1MF
C124	1-107-826-11	s	CAPACITOR,CHIP CERAMIC 0.1MF
C125	1-107-826-11	s	CAPACITOR,CHIP CERAMIC 0.1MF
C126	1-107-826-11	s	CAPACITOR,CHIP CERAMIC 0.1MF
C127	1-107-826-11	s	CAPACITOR,CHIP CERAMIC 0.1MF
C128	1-107-826-11	s	CAPACITOR,CHIP CERAMIC 0.1MF
C129	1-107-826-11	s	CAPACITOR,CHIP CERAMIC 0.1MF
C130	1-107-826-11	s	CAPACITOR,CHIP CERAMIC 0.1MF
C131	1-107-826-11	s	CAPACITOR,CHIP CERAMIC 0.1MF
C132	1-107-826-11	s	CAPACITOR,CHIP CERAMIC 0.1MF
C133	1-107-826-11	s	CAPACITOR,CHIP CERAMIC 0.1MF
C134	1-107-826-11	s	CAPACITOR,CHIP CERAMIC 0.1MF
C135	1-107-826-11	s	CAPACITOR,CHIP CERAMIC 0.1MF
C136	1-107-826-11	s	CAPACITOR,CHIP CERAMIC 0.1MF
C137	1-107-826-11	s	CAPACITOR,CHIP CERAMIC 0.1MF
C138	1-107-826-11	s	CAPACITOR,CHIP CERAMIC 0.1MF
C139	1-107-826-11	s	CAPACITOR,CHIP CERAMIC 0.1MF
CN32	1-695-453-11	s	CONNECTOR,BOARD TO BOARD 50P
CP1	1-767-141-21	s	OSCILLATOR, CRYSTAL
FB1	1-543-309-21	s	BEAD,FERRITE
FB2	1-543-309-21	s	BEAD,FERRITE
FL1	1-239-719-31	s	FILTER, CHIP EMI
FL3	1-117-193-11	s	CAPACITOR,3 TERMINAL 1.5MF/50V
FL4	1-117-193-11	s	CAPACITOR,3 TERMINAL 1.5MF/50V
FL5	1-239-719-31	s	FILTER, CHIP EMI
FL6	1-239-719-31	s	FILTER, CHIP EMI
FL7	1-239-719-31	s	FILTER, CHIP EMI
IC1	8-759-524-50	s	IC TC74VHC541FT(EL)
IC2	8-759-524-50	s	IC TC74VHC541FT(EL)
IC3	8-759-390-07	s	IC CXD8997R
IC4	8-759-524-50	s	IC TC74VHC541FT(EL)
IC5	8-759-524-50	s	IC TC74VHC541FT(EL)
IC6	8-759-456-26	s	IC 74LCX541MTCX
IC7	8-759-524-07	s	IC TC74VHC138FT(EL)
IC8	8-759-524-50	s	IC TC74VHC541FT(EL)
IC9	8-759-524-50	s	IC TC74VHC541FT(EL)
IC10	8-759-524-50	s	IC TC74VHC541FT(EL)
IC11	8-759-386-25	s	IC 74LCX245MTCX
IC12	8-759-523-81	s	IC TC74VHC08FT(EL)
IC13	8-759-524-50	s	IC TC74VHC541FT(EL)
IC14	8-759-524-50	s	IC TC74VHC541FT(EL)
IC15	8-759-386-25	s	IC 74LCX245MTCX
IC16	8-759-524-50	s	IC TC74VHC541FT(EL)
IC17	8-759-524-50	s	IC TC74VHC541FT(EL)
IC18	8-759-524-10	s	IC TC74VHC157FT (EL)
IC19	8-759-438-84	s	IC CXD9025R
IC20	8-759-474-51	s	IC CXD8973BR
IC21	8-759-557-59	s	IC UPD4516821AG5-A10B-9NF
IC22	8-759-557-59	s	IC UPD4516821AG5-A10B-9NF
IC23	8-759-557-59	s	IC UPD4516821AG5-A10B-9NF

(DPR-87 BOARD)

Ref. No. or Q'ty	Part No.	SP	Description
IC24	8-759-557-59	s	IC UPD4516821AG5-A10B-9NF
IC25	8-759-386-25	s	IC 74LCX245MTCX
IC26	8-759-375-21	s	IC CXD8974AR
IC27	8-759-386-26	s	IC 74LCX574MTCX
IC28	8-759-557-59	s	IC UPD4516821AG5-A10B-9NF
IC29	8-759-557-59	s	IC UPD4516821AG5-A10B-9NF
IC30	8-759-557-59	s	IC UPD4516821AG5-A10B-9NF
IC31	8-759-557-59	s	IC UPD4516821AG5-A10B-9NF
IC32	8-759-329-06	s	IC UPD42280GU-30-E2
IC33	8-759-329-06	s	IC UPD42280GU-30-E2
IC34	8-759-523-95	s	IC TC74VHC74FT(EL)
IC35	8-759-390-96	s	IC CXD8946Q
IC36	8-759-597-69	s	IC UPD4516161AG5-A10B-9NF-E2
IC37	8-759-491-46	s	IC TC74VHCT04AFT (EL)
IC38	8-759-523-95	s	IC TC74VHC74FT(EL)
IC39	8-759-449-09	s	IC CXD8945BR
IC40	8-759-557-59	s	IC UPD4516821AG5-A10B-9NF
IC41	8-759-557-59	s	IC UPD4516821AG5-A10B-9NF
IC42	8-759-557-59	s	IC UPD4516821AG5-A10B-9NF
IC45	8-759-525-59	s	IC CXD9012AR
IC46	8-759-597-69	s	IC UPD4516161AG5-A10B-9NF-E2
IC47	8-759-597-69	s	IC UPD4516161AG5-A10B-9NF-E2
R1	1-218-740-11	s	RESISTOR,CHIP 100K 1/16W(1608)
R2	1-218-740-11	s	RESISTOR,CHIP 100K 1/16W(1608)
R3	1-218-740-11	s	RESISTOR,CHIP 100K 1/16W(1608)
R4	1-218-644-11	s	RESISTOR,METAL 10 1/16W
R5	1-218-740-11	s	RESISTOR,CHIP 100K 1/16W(1608)
R6	1-216-864-11	s	RESISTOR,CHIP 0 1/16W (1608)
R7	1-218-668-11	s	RESISTOR,CHIP 100 1/16W (1608)
R9	1-218-740-11	s	RESISTOR,CHIP 100K 1/16W(1608)
R10	1-218-656-11	s	RESISTOR CHIP 33 1/16W (1608)
R11	1-218-656-11	s	RESISTOR CHIP 33 1/16W (1608)
R12	1-218-656-11	s	RESISTOR CHIP 33 1/16W (1608)
R13	1-218-656-11	s	RESISTOR CHIP 33 1/16W (1608)
R15	1-218-656-11	s	RESISTOR CHIP 33 1/16W (1608)
R16	1-218-656-11	s	RESISTOR CHIP 33 1/16W (1608)
R17	1-218-656-11	s	RESISTOR CHIP 33 1/16W (1608)
R18	1-218-656-11	s	RESISTOR CHIP 33 1/16W (1608)
R19	1-218-656-11	s	RESISTOR CHIP 33 1/16W (1608)
R20	1-218-656-11	s	RESISTOR CHIP 33 1/16W (1608)
R21	1-218-656-11	s	RESISTOR CHIP 33 1/16W (1608)
R22	1-218-656-11	s	RESISTOR CHIP 33 1/16W (1608)
R23	1-218-656-11	s	RESISTOR CHIP 33 1/16W (1608)
R24	1-218-656-11	s	RESISTOR CHIP 33 1/16W (1608)
R25	1-218-656-11	s	RESISTOR CHIP 33 1/16W (1608)
R26	1-218-692-11	s	RESISTOR,CHIP 1.0K 1/16W(1608)
R27	1-218-692-11	s	RESISTOR,CHIP 1.0K 1/16W(1608)
R28	1-218-679-91	s	RESISTOR,METAL FILM 300 1/16W
R29	1-218-679-91	s	RESISTOR,METAL FILM 300 1/16W
R30	1-218-716-11	s	RESISTOR,CHIP 10K 1/16W(1608)
R31	1-218-679-91	s	RESISTOR,METAL FILM 300 1/16W
R32	1-216-864-11	s	RESISTOR,CHIP 0 1/16W (1608)
R33	1-218-656-11	s	RESISTOR CHIP 33 1/16W (1608)
R35	1-218-656-11	s	RESISTOR CHIP 33 1/16W (1608)
R37	1-218-656-11	s	RESISTOR CHIP 33 1/16W (1608)
R38	1-218-656-11	s	RESISTOR CHIP 33 1/16W (1608)
R40	1-218-692-11	s	RESISTOR,CHIP 1.0K 1/16W(1608)
R41	1-218-692-11	s	RESISTOR,CHIP 1.0K 1/16W(1608)

(DPR-87 BOARD)

Ref. No. or Q'ty	Part No.	SP	Description
R43	1-218-679-91	s	RESISTOR,METAL FILM 300 1/16W
R44	1-218-716-11	s	RESISTOR,CHIP 10K 1/16W(1608)
R45	1-218-679-91	s	RESISTOR,METAL FILM 300 1/16W
R46	1-216-864-11	s	RESISTOR,CHIP 0 1/16W (1608)
R48	1-218-660-91	s	RESISTOR CHIP 47 1/16W (1608)
R49	1-218-660-91	s	RESISTOR CHIP 47 1/16W (1608)
R50	1-218-660-91	s	RESISTOR CHIP 47 1/16W (1608)
R51	1-218-660-91	s	RESISTOR CHIP 47 1/16W (1608)
R52	1-218-660-91	s	RESISTOR CHIP 47 1/16W (1608)
R55	1-218-692-11	s	RESISTOR,CHIP 1.0K 1/16W(1608)
R56	1-218-692-11	s	RESISTOR,CHIP 1.0K 1/16W(1608)
R57	1-218-679-91	s	RESISTOR,METAL FILM 300 1/16W
R58	1-218-716-11	s	RESISTOR,CHIP 10K 1/16W(1608)
R59	1-218-679-91	s	RESISTOR,METAL FILM 300 1/16W
R60	1-218-740-11	s	RESISTOR,CHIP 100K 1/16W(1608)
R61	1-218-740-11	s	RESISTOR,CHIP 100K 1/16W(1608)
R62	1-218-740-11	s	RESISTOR,CHIP 100K 1/16W(1608)
R63	1-218-740-11	s	RESISTOR,CHIP 100K 1/16W(1608)
R64	1-216-864-11	s	RESISTOR,CHIP 0 1/16W (1608)
R65	1-216-864-11	s	RESISTOR,CHIP 0 1/16W (1608)
R66	1-216-864-11	s	RESISTOR,CHIP 0 1/16W (1608)
R67	1-216-864-11	s	RESISTOR,CHIP 0 1/16W (1608)
R68	1-216-864-11	s	RESISTOR,CHIP 0 1/16W (1608)
R70	1-216-864-11	s	RESISTOR,CHIP 0 1/16W (1608)
R71	1-216-864-11	s	RESISTOR,CHIP 0 1/16W (1608)
R73	1-216-864-11	s	RESISTOR,CHIP 0 1/16W (1608)
RB1	1-239-309-11	s	RESISTOR ARRAY,CHIP 100K
RB2	1-239-309-11	s	RESISTOR ARRAY,CHIP 100K
RB3	1-239-407-11	s	NETWORK, RESISTOR(CHIP TYPE)
RB4	1-233-936-11	s	NETWORK RESISTOR 10 (1608)
RB5	1-239-309-11	s	RESISTOR ARRAY,CHIP 100K
RB6	1-239-309-11	s	RESISTOR ARRAY,CHIP 100K
RB7	1-236-907-11	s	RESISTOR BLOCK 100K (1608)
RB8	1-239-309-11	s	RESISTOR ARRAY,CHIP 100K
RB9	1-233-936-11	s	NETWORK RESISTOR 10 (1608)
RB10	1-233-936-11	s	NETWORK RESISTOR 10 (1608)
RB11	1-239-409-11	s	RESISTOR NETWORK 47 (1608)
RB12	1-239-409-11	s	RESISTOR NETWORK 47 (1608)
RB13	1-239-409-11	s	RESISTOR NETWORK 47 (1608)
RB14	1-239-309-11	s	RESISTOR ARRAY,CHIP 100K
RB15	1-236-907-11	s	RESISTOR BLOCK 100K (1608)
RB16	1-239-409-11	s	RESISTOR NETWORK 47 (1608)
RB17	1-239-409-11	s	RESISTOR NETWORK 47 (1608)
RB18	1-239-409-11	s	RESISTOR NETWORK 47 (1608)
RB19	1-239-409-11	s	RESISTOR NETWORK 47 (1608)
RB20	1-233-936-11	s	NETWORK RESISTOR 10 (1608)
RB21	1-239-409-11	s	RESISTOR NETWORK 47 (1608)
RB22	1-239-409-11	s	RESISTOR NETWORK 47 (1608)
RB23	1-239-409-11	s	RESISTOR NETWORK 47 (1608)

EQ-72 BOARD

Ref. No. or Q'ty	Part No.	SP	Description
1pc	A-8316-722-A	o	MOUNTED CIRCUIT BOARD, EQ-72
2pcs	3-729-061-01	s	SCREW (M2X4.5) (TYPE 1)(STEEL)
C101	1-107-826-11	s	CAPACITOR,CHIP CERAMIC 0.1MF
C102	1-162-915-11	s	CAPACITOR,CERAMIC 10PF/50V CH
C103	1-162-915-11	s	CAPACITOR,CERAMIC 10PF/50V CH
C104	1-107-826-11	s	CAPACITOR,CHIP CERAMIC 0.1MF
C105	1-126-391-11	s	CAPACITOR ELECT 47MF/6.3V(105)
C106	1-126-391-11	s	CAPACITOR ELECT 47MF/6.3V(105)
C107	1-107-826-11	s	CAPACITOR,CHIP CERAMIC 0.1MF
C108	1-164-227-11	s	CAPACITOR,CERAMIC 0.022MF/25V
C109	1-164-227-11	s	CAPACITOR,CERAMIC 0.022MF/25V
C110	1-164-315-11	s	CAPACITOR,CERAMIC 470PF/50V CH
C111	1-164-315-11	s	CAPACITOR,CERAMIC 470PF/50V CH
C112	1-107-826-11	s	CAPACITOR,CHIP CERAMIC 0.1MF
C115	1-162-970-11	s	CAPACITOR CERAMIC 0.01MF/25V B
C116	1-117-229-11	s	CAPACITOR, (SMD) 10MF/10V
C118	1-107-826-11	s	CAPACITOR,CHIP CERAMIC 0.1MF
C151	1-107-826-11	s	CAPACITOR,CHIP CERAMIC 0.1MF
C152	1-107-826-11	s	CAPACITOR,CHIP CERAMIC 0.1MF
C153	1-107-826-11	s	CAPACITOR,CHIP CERAMIC 0.1MF
C154	1-107-826-11	s	CAPACITOR,CHIP CERAMIC 0.1MF
C158	1-164-227-11	s	CAPACITOR,CERAMIC 0.022MF/25V
C202	1-107-826-11	s	CAPACITOR,CHIP CERAMIC 0.1MF
C205	1-107-826-11	s	CAPACITOR,CHIP CERAMIC 0.1MF
C206	1-107-826-11	s	CAPACITOR,CHIP CERAMIC 0.1MF
C209	1-107-826-11	s	CAPACITOR,CHIP CERAMIC 0.1MF
C210	1 104 913 11	s	CAPACITOR,CHIP TANTAL 10MF/16V
C219	1-107-826-11	s	CAPACITOR,CHIP CERAMIC 0.1MF
C220	1-104-913-11	s	CAPACITOR,CHIP TANTAL 10MF/16V
C221	1-107-826-11	s	CAPACITOR,CHIP CERAMIC 0.1MF
C222	1-126-391-11	s	CAPACITOR ELECT 47MF/6.3V(105)
C240	1-107-826-11	s	CAPACITOR,CHIP CERAMIC 0.1MF
C241	1-107-826-11	s	CAPACITOR,CHIP CERAMIC 0.1MF
C242	1-107-826-11	s	CAPACITOR,CHIP CERAMIC 0.1MF
C301	1-107-826-11	s	CAPACITOR,CHIP CERAMIC 0.1MF
C302	1-107-826-11	s	CAPACITOR,CHIP CERAMIC 0.1MF
C303	1-107-826-11	s	CAPACITOR,CHIP CERAMIC 0.1MF
C304	1-107-826-11	s	CAPACITOR,CHIP CERAMIC 0.1MF
C305	1-107-826-11	s	CAPACITOR,CHIP CERAMIC 0.1MF
C311	1-164-227-11	s	CAPACITOR,CERAMIC 0.022MF/25V
C312	1-107-826-11	s	CAPACITOR,CHIP CERAMIC 0.1MF
C313	1-164-227-11	s	CAPACITOR,CERAMIC 0.022MF/25V
C314	1-107-826-11	s	CAPACITOR,CHIP CERAMIC 0.1MF
C315	1-162-919-11	s	CAPACITOR,CERAMIC 22PF/50V CH
C316	1-162-920-11	s	CAPACITOR,CERAMIC 27PF/50V CH
C317	1-162-916-11	s	CAPACITOR,CERAMIC 12PF/50V CH
C318	1-162-910-11	s	CAPACITOR,CERAMIC 5PF/50V 1608
C319	1-162-919-11	s	CAPACITOR,CERAMIC 22PF/50V CH
C320	1-162-916-11	s	CAPACITOR,CERAMIC 12PF/50V CH
C321	1-107-826-11	s	CAPACITOR,CHIP CERAMIC 0.1MF
C322	1-164-227-11	s	CAPACITOR,CERAMIC 0.022MF/25V
C323	1-107-826-11	s	CAPACITOR,CHIP CERAMIC 0.1MF
C324	1-162-919-11	s	CAPACITOR,CERAMIC 22PF/50V CH
C325	1-164-227-11	s	CAPACITOR,CERAMIC 0.022MF/25V
C326	1-107-826-11	s	CAPACITOR,CHIP CERAMIC 0.1MF
C327	1-164-227-11	s	CAPACITOR,CERAMIC 0.022MF/25V
C328	1-162-970-11	s	CAPACITOR CERAMIC 0.01MF/25V B
C329	1-107-826-11	s	CAPACITOR,CHIP CERAMIC 0.1MF

(EQ-72 BOARD)

Ref. No. or Q'ty	Part No.	SP	Description
C330	1-107-826-11	s	CAPACITOR,CHIP CERAMIC 0.1MF
C331	1-107-826-11	s	CAPACITOR,CHIP CERAMIC 0.1MF
C332	1-107-826-11	s	CAPACITOR,CHIP CERAMIC 0.1MF
C333	1-164-227-11	s	CAPACITOR,CERAMIC 0.022MF/25V
C334	1-107-826-11	s	CAPACITOR,CHIP CERAMIC 0.1MF
C335	1-107-826-11	s	CAPACITOR,CHIP CERAMIC 0.1MF
C336	1-162-970-11	s	CAPACITOR CERAMIC 0.01MF/25V B
C337	1-162-927-11	s	CAPACITOR,CERAMIC 100PF/50V CH
C338	1-164-217-11	s	CAPACITOR,CERAMIC 150PF/50V CH
C339	1-162-964-11	s	CAPACITOR,CERAMIC 1000PF/50V B
C340	1-107-826-11	s	CAPACITOR,CHIP CERAMIC 0.1MF
C341	1-162-970-11	s	CAPACITOR CERAMIC 0.01MF/25V B
C342	1-164-315-11	s	CAPACITOR,CERAMIC 470PF/50V CH
C343	1-107-826-11	s	CAPACITOR,CHIP CERAMIC 0.1MF
C344	1-162-970-11	s	CAPACITOR CERAMIC 0.01MF/25V B
C345	1-107-826-11	s	CAPACITOR,CHIP CERAMIC 0.1MF
C346	1-162-927-11	s	CAPACITOR,CERAMIC 100PF/50V CH
C347	1-162-927-11	s	CAPACITOR,CERAMIC 100PF/50V CH
C348	1-162-927-11	s	CAPACITOR,CERAMIC 100PF/50V CH
C349	1-107-826-11	s	CAPACITOR,CHIP CERAMIC 0.1MF
C350	1-107-826-11	s	CAPACITOR,CHIP CERAMIC 0.1MF
C351	1-162-970-11	s	CAPACITOR CERAMIC 0.01MF/25V B
C352	1-107-826-11	s	CAPACITOR,CHIP CERAMIC 0.1MF
C363	1-107-826-11	s	CAPACITOR,CHIP CERAMIC 0.1MF
C364	1-107-826-11	s	CAPACITOR,CHIP CERAMIC 0.1MF
C367	1-104-913-11	s	CAPACITOR,CHIP TANTAL 10MF/16V
C368	1 104 913 11	s	CAPACITOR,CHIP TANTAL 10MF/16V
C369	1-104-913-11	s	CAPACITOR,CHIP TANTAL 10MF/16V
C370	1-104-913-11	s	CAPACITOR,CHIP TANTAL 10MF/16V
C371	1-104-913-11	s	CAPACITOR,CHIP TANTAL 10MF/16V
C372	1-104-913-11	s	CAPACITOR,CHIP TANTAL 10MF/16V
C373	1-107-826-11	s	CAPACITOR,CHIP CERAMIC 0.1MF
C374	1-107-826-11	s	CAPACITOR,CHIP CERAMIC 0.1MF
C375	1-164-156-11	s	CAPACITOR,CERAMIC 0.1MF/25V F
C376	1-107-826-11	s	CAPACITOR,CHIP CERAMIC 0.1MF
C377	1-126-394-11	s	CAPACITOR ELECT 10MF/16V(CHIP)
C378	1-107-826-11	s	CAPACITOR,CHIP CERAMIC 0.1MF
C379	1-164-156-11	s	CAPACITOR,CERAMIC 0.1MF/25V F
C391	1-107-826-11	s	CAPACITOR,CHIP CERAMIC 0.1MF
C392	1-107-826-11	s	CAPACITOR,CHIP CERAMIC 0.1MF
C402	1-107-826-11	s	CAPACITOR,CHIP CERAMIC 0.1MF
C404	1-107-826-11	s	CAPACITOR,CHIP CERAMIC 0.1MF
C405	1-107-826-11	s	CAPACITOR,CHIP CERAMIC 0.1MF
C411	1-164-227-11	s	CAPACITOR,CERAMIC 0.022MF/25V
C412	1-107-826-11	s	CAPACITOR,CHIP CERAMIC 0.1MF
C413	1-164-227-11	s	CAPACITOR,CERAMIC 0.022MF/25V
C414	1-107-826-11	s	CAPACITOR,CHIP CERAMIC 0.1MF
C415	1-162-919-11	s	CAPACITOR,CERAMIC 22PF/50V CH
C416	1-162-920-11	s	CAPACITOR,CERAMIC 27PF/50V CH
C417	1-162-916-11	s	CAPACITOR,CERAMIC 12PF/50V CH
C418	1-162-919-11	s	CAPACITOR,CERAMIC 22PF/50V CH
C419	1-162-910-11	s	CAPACITOR,CERAMIC 5PF/50V 1608
C420	1-107-826-11	s	CAPACITOR,CHIP CERAMIC 0.1MF
C421	1-162-916-11	s	CAPACITOR,CERAMIC 12PF/50V CH
C422	1-164-227-11	s	CAPACITOR,CERAMIC 0.022MF/25V
C423	1-107-826-11	s	CAPACITOR,CHIP CERAMIC 0.1MF
C424	1-162-919-11	s	CAPACITOR,CERAMIC 22PF/50V CH
C425	1-164-227-11	s	CAPACITOR,CERAMIC 0.022MF/25V
C426	1-107-826-11	s	CAPACITOR,CHIP CERAMIC 0.1MF

(EQ-72 BOARD)

Ref. No. or Q'ty	Part No.	SP	Description
C427	1-164-227-11	s	CAPACITOR,CERAMIC 0.022MF/25V
C428	1-162-970-11	s	CAPACITOR CERAMIC 0.01MF/25V B
C429	1-107-826-11	s	CAPACITOR,CHIP CERAMIC 0.1MF
C430	1-107-826-11	s	CAPACITOR,CHIP CERAMIC 0.1MF
C431	1-107-826-11	s	CAPACITOR,CHIP CERAMIC 0.1MF
C432	1-107-826-11	s	CAPACITOR,CHIP CERAMIC 0.1MF
C433	1-164-227-11	s	CAPACITOR,CERAMIC 0.022MF/25V
C434	1-107-826-11	s	CAPACITOR,CHIP CERAMIC 0.1MF
C435	1-107-826-11	s	CAPACITOR,CHIP CERAMIC 0.1MF
C436	1-162-970-11	s	CAPACITOR CERAMIC 0.01MF/25V B
C437	1-162-927-11	s	CAPACITOR,CERAMIC 100PF/50V CH
C438	1-164-217-11	s	CAPACITOR,CERAMIC 150PF/50V CH
C439	1-162-964-11	s	CAPACITOR,CERAMIC 1000PF/50V B
C440	1-107-826-11	s	CAPACITOR,CHIP CERAMIC 0.1MF
C441	1-162-970-11	s	CAPACITOR CERAMIC 0.01MF/25V B
C442	1-164-315-11	s	CAPACITOR,CERAMIC 470PF/50V CH
C443	1-107-826-11	s	CAPACITOR,CHIP CERAMIC 0.1MF
C444	1-162-970-11	s	CAPACITOR CERAMIC 0.01MF/25V B
C445	1-107-826-11	s	CAPACITOR,CHIP CERAMIC 0.1MF
C446	1-162-927-11	s	CAPACITOR,CERAMIC 100PF/50V CH
C447	1-162-927-11	s	CAPACITOR,CERAMIC 100PF/50V CH
C448	1-162-927-11	s	CAPACITOR,CERAMIC 100PF/50V CH
C449	1-107-826-11	s	CAPACITOR,CHIP CERAMIC 0.1MF
C450	1-107-826-11	s	CAPACITOR,CHIP CERAMIC 0.1MF
C451	1-162-970-11	s	CAPACITOR CERAMIC 0.01MF/25V B
C452	1-107-826-11	s	CAPACITOR,CHIP CERAMIC 0.1MF
C475	1 164 156 11	s	CAPACITOR,CERAMIC 0.1MF/25V F
C476	1-107-826-11	s	CAPACITOR,CHIP CERAMIC 0.1MF
C478	1-107-826-11	s	CAPACITOR,CHIP CERAMIC 0.1MF
C479	1-164-156-11	s	CAPACITOR,CERAMIC 0.1MF/25V F
C501	1-164-227-11	s	CAPACITOR,CERAMIC 0.022MF/25V
C502	1-164-227-11	s	CAPACITOR,CERAMIC 0.022MF/25V
C503	1-164-227-11	s	CAPACITOR,CERAMIC 0.022MF/25V
C504	1-164-227-11	s	CAPACITOR,CERAMIC 0.022MF/25V
C505	1-164-227-11	s	CAPACITOR,CERAMIC 0.022MF/25V
C506	1-164-227-11	s	CAPACITOR,CERAMIC 0.022MF/25V
C508	1-162-967-11	s	CAPACITOR,CERAMIC 3300PF/50V B
C509	1-162-967-11	s	CAPACITOR,CERAMIC 3300PF/50V B
C510	1-117-229-11	s	CAPACITOR, (SMD) 10MF/10V
C511	1-162-967-11	s	CAPACITOR,CERAMIC 3300PF/50V B
C512	1-162-967-11	s	CAPACITOR,CERAMIC 3300PF/50V B
C513	1-162-970-11	s	CAPACITOR CERAMIC 0.01MF/25V B
C514	1-162-970-11	s	CAPACITOR CERAMIC 0.01MF/25V B
C515	1-162-970-11	s	CAPACITOR CERAMIC 0.01MF/25V B
C516	1-162-970-11	s	CAPACITOR CERAMIC 0.01MF/25V B
C517	1-107-826-11	s	CAPACITOR,CHIP CERAMIC 0.1MF
C518	1-107-826-11	s	CAPACITOR,CHIP CERAMIC 0.1MF
C519	1-107-826-11	s	CAPACITOR,CHIP CERAMIC 0.1MF
C520	1-107-826-11	s	CAPACITOR,CHIP CERAMIC 0.1MF
C521	1-107-826-11	s	CAPACITOR,CHIP CERAMIC 0.1MF
C701	1-162-964-11	s	CAPACITOR,CERAMIC 1000PF/50V B
C702	1-107-826-11	s	CAPACITOR,CHIP CERAMIC 0.1MF
C703	1-107-826-11	s	CAPACITOR,CHIP CERAMIC 0.1MF
C704	1-164-315-11	s	CAPACITOR,CERAMIC 470PF/50V CH
C705	1-162-964-11	s	CAPACITOR,CERAMIC 1000PF/50V B
C706	1-164-315-11	s	CAPACITOR,CERAMIC 470PF/50V CH
C707	1-164-227-11	s	CAPACITOR,CERAMIC 0.022MF/25V
C708	1-164-227-11	s	CAPACITOR,CERAMIC 0.022MF/25V
C709	1-107-689-21	s	CAPACITOR TANTALUM 1MF/35V

(EQ-72 BOARD)

Ref. No. or Q'ty	Part No.	SP	Description
C710	1-107-826-11	s	CAPACITOR,CHIP CERAMIC 0.1MF
C711	1-107-689-21	s	CAPACITOR TANTALUM 1MF/35V
C712	1-162-927-11	s	CAPACITOR,CERAMIC 100PF/50V CH
C713	1-164-315-11	s	CAPACITOR,CERAMIC 470PF/50V CH
C714	1-162-915-11	s	CAPACITOR,CERAMIC 10PF/50V CH
C715	1-162-915-11	s	CAPACITOR,CERAMIC 10PF/50V CH
C716	1-107-826-11	s	CAPACITOR,CHIP CERAMIC 0.1MF
C717	1-107-826-11	s	CAPACITOR,CHIP CERAMIC 0.1MF
C718	1-107-826-11	s	CAPACITOR,CHIP CERAMIC 0.1MF
C719	1-107-826-11	s	CAPACITOR,CHIP CERAMIC 0.1MF
C720	1-107-826-11	s	CAPACITOR,CHIP CERAMIC 0.1MF
C721	1-126-394-11	s	CAPACITOR ELECT 10MF/16V(CHIP)
C722	1-126-394-11	s	CAPACITOR ELECT 10MF/16V(CHIP)
CN1	1-766-383-11	o	PIN, CONNECTOR (12P)(SMD)1.5MM
CN3	1-573-290-21	s	PIN, CONNECTOR (4P)(SMD)1.5MM
CN4	1-766-383-11	o	PIN, CONNECTOR (12P)(SMD)1.5MM
CN7	1-573-806-21	s	PIN, CONNECTOR (6P)(SMD)1.5MM
CN101	1-764-177-11	o	PIN, CONNECTOR (7P)(SMD)1.5MM
CN102	1-573-290-21	s	PIN, CONNECTOR (4P)(SMD)1.5MM
CN401	1-695-453-11	s	CONNECTOR,BOARD TO BOARD 50P
CN900	1-573-768-21	o	PIN, CONNECTOR (5P)(SMD)1.5MM
D701	8-719-941-23	s	DIODE DA204U
D702	8-719-991-27	s	LED CL-170G-CD
D703	8-719-026-34	s	LED CL-170UR-CD
D704	8-719-026-34	s	LED CL-170UR-CD
D705	8-719-941-23	s	DIODE DA204U
DL301	1-411-788-11	s	DELAY LINE
DL401	1-411-788-11	s	DELAY LINE
IC101	8-729-047-61	s	TRANSISTOR SI4925DY-T1
IC102	8-759-523-94	s	IC TC74VHC32FT(EL)
IC103	8-759-386-25	s	IC 74LCX245MTCX
IC105	8-752-075-37	s	IC CXA3054R
IC201	8-729-045-28	s	TRANSISTOR SI4532DY-T1
IC202	8-759-523-78	s	IC TC74VHC00FT(EL)
IC203	8-759-523-78	s	IC TC74VHC00FT(EL)
IC204	8-759-390-93	s	IC CXD8979R
IC206	8-729-045-28	s	TRANSISTOR SI4532DY-T1
IC241	8-759-523-81	s	IC TC74VHC08FT(EL)
IC242	8-759-388-62	s	IC NJU7062M (TE2)
IC302	8-759-441-31	s	IC MC14053BDTR2
IC303	8-752-075-38	s	IC CXA3053R
IC304	8-752-075-40	s	IC CXA3051R
IC361	8-729-047-61	s	TRANSISTOR SI4925DY-T1
IC362	8-729-045-28	s	TRANSISTOR SI4532DY-T1
IC363	8-759-635-27	s	IC M62352GP
IC371	8-759-112-53	s	IC UPC1663G
IC401	8-759-635-27	s	IC M62352GP
IC402	8-759-441-31	s	IC MC14053BDTR2
IC403	8-752-075-38	s	IC CXA3053R
IC404	8-752-075-40	s	IC CXA3051R
IC471	8-759-112-53	s	IC UPC1663G
IC501	8-759-524-10	s	IC TC74VHC157FT (EL)
IC502	8-759-390-95	s	IC CXD8944Q
IC505	8-759-359-66	s	IC TL082CPW (E05)
IC506	8-759-359-66	s	IC TL082CPW (E05)
IC509	8-759-386-25	s	IC 74LCX245MTCX
IC701	8-759-260-55	s	IC TLC272CPW (E05)
IC702	8-759-049-86	s	IC SN74HCT244APW (E05)

(EQ-72 BOARD)

Ref. No. or Q'ty	Part No.	SP	Description
IC703	8-759-392-62	s	IC NM24C16LEM8
IC704	8-759-524-27	s	IC TC74VHC244FT(EL)
IC705	8-759-441-31	s	IC MC14053BDTR2
IC706	8-759-388-62	s	IC NJU7062M (TE2)
IC707	8-759-441-31	s	IC MC14053BDTR2
IC708	8-759-642-25	s	IC HD6433437WV09X
IC709	8-759-523-78	s	IC TC74VHC00FT(EL)
IC710	8-759-491-46	s	IC TC74VHCT04AFT (EL)
L101	1-414-392-21	s	INDUCTOR (SMD) 1.0UH
L102	1-414-392-21	s	INDUCTOR (SMD) 1.0UH
L103	1-414-392-21	s	INDUCTOR (SMD) 1.0UH
L105	1-412-189-11	s	MICRO INDUCTOR
L203	1-414-392-21	s	INDUCTOR (SMD) 1.0UH
L204	1-414-392-21	s	INDUCTOR (SMD) 1.0UH
L300	1-412-140-31	s	INDUCTOR, MICRO 1.8UH
L301	1-412-140-31	s	INDUCTOR, MICRO 1.8UH
L360	1-414-392-21	s	INDUCTOR (SMD) 1.0UH
L361	1-414-392-21	s	INDUCTOR (SMD) 1.0UH
L362	1-414-392-21	s	INDUCTOR (SMD) 1.0UH
L363	1-414-392-21	s	INDUCTOR (SMD) 1.0UH
L364	1-414-392-21	s	INDUCTOR (SMD) 1.0UH
L365	1-414-392-21	s	INDUCTOR (SMD) 1.0UH
L366	1-414-392-21	s	INDUCTOR (SMD) 1.0UH
L400	1-412-140-31	s	INDUCTOR, MICRO 1.8UH
L401	1-412-140-31	s	INDUCTOR, MICRO 1.8UH
L501	1-414-392-21	s	INDUCTOR (SMD) 1.0UH
Q101	8-729-028-91	s	TRANSISTOR DTA144EUA-T106
Q102	8-729-029-14	s	TRANSISTOR DTC144EUA-T106
Q103	8-729-029-14	s	TRANSISTOR DTC144EUA-T106
Q104	8-729-029-14	s	TRANSISTOR DTC144EUA-T106
Q105	8-729-140-63	s	TRANSISTOR 2SA1611-M5M6
Q106	8-729-140-63	s	TRANSISTOR 2SA1611-M5M6
Q107	8-729-028-73	s	TRANSISTOR DTA114EUA-T106
Q108	8-729-028-73	s	TRANSISTOR DTA114EUA-T106
Q109	8-729-117-32	s	TRANSISTOR 2SC4177
Q110	8-729-117-32	s	TRANSISTOR 2SC4177
Q111	8-729-117-32	s	TRANSISTOR 2SC4177
Q112	8-729-117-32	s	TRANSISTOR 2SC4177
Q204	8-729-029-14	s	TRANSISTOR DTC144EUA-T106
Q205	8-729-029-14	s	TRANSISTOR DTC144EUA-T106
Q206	8-729-028-91	s	TRANSISTOR DTA144EUA-T106
Q241	8-729-028-91	s	TRANSISTOR DTA144EUA-T106
Q301	8-729-117-32	s	TRANSISTOR 2SC4177
Q302	8-729-117-32	s	TRANSISTOR 2SC4177
Q303	8-729-117-32	s	TRANSISTOR 2SC4177
Q304	8-729-117-32	s	TRANSISTOR 2SC4177
Q361	8-729-028-91	s	TRANSISTOR DTA144EUA-T106
Q362	8-729-029-14	s	TRANSISTOR DTC144EUA-T106
Q363	8-729-029-14	s	TRANSISTOR DTC144EUA-T106
Q364	8-729-029-14	s	TRANSISTOR DTC144EUA-T106
Q365	8-729-029-14	s	TRANSISTOR DTC144EUA-T106
Q371	8-729-117-32	s	TRANSISTOR 2SC4177
Q402	8-729-117-32	s	TRANSISTOR 2SC4177
Q403	8-729-117-32	s	TRANSISTOR 2SC4177
Q404	8-729-117-32	s	TRANSISTOR 2SC4177
Q471	8-729-117-32	s	TRANSISTOR 2SC4177
Q510	8-729-029-14	s	TRANSISTOR DTC144EUA-T106
Q700	8-729-029-14	s	TRANSISTOR DTC144EUA-T106

(EQ-72 BOARD)

Ref. No. or Q'ty	Part No.	SP	Description
R1	1-218-661-11	s	RESISTOR,CHIP 51 1/16W (1608)
R2	1-218-661-11	s	RESISTOR,CHIP 51 1/16W (1608)
R3	1-218-661-11	s	RESISTOR,CHIP 51 1/16W (1608)
R4	1-218-661-11	s	RESISTOR,CHIP 51 1/16W (1608)
R101	1-218-676-11	s	RESISTOR,CHIP 220 1/16W(1608)
R102	1-218-676-11	s	RESISTOR,CHIP 220 1/16W(1608)
R103	1-218-676-11	s	RESISTOR,CHIP 220 1/16W(1608)
R104	1-218-676-11	s	RESISTOR,CHIP 220 1/16W(1608)
R105	1-218-740-11	s	RESISTOR,CHIP 100K 1/16W(1608)
R107	1-218-740-11	s	RESISTOR,CHIP 100K 1/16W(1608)
R109	1-218-732-11	s	RESISTOR,CHIP 47K 1/16W(1608)
R110	1-218-694-11	s	RESISTOR CHIP 1.2K1/16W(1608)
R111	1-218-676-11	s	RESISTOR,CHIP 220 1/16W(1608)
R112	1-218-680-11	s	RESISTOR,CHIP 330 1/16W(1608)
R113	1-218-694-11	s	RESISTOR CHIP 1.2K1/16W(1608)
R114	1-218-676-11	s	RESISTOR,CHIP 220 1/16W(1608)
R115	1-218-680-11	s	RESISTOR,CHIP 330 1/16W(1608)
R116	1-218-720-11	s	RESISTOR,CHIP 15K 1/16W(1608)
R117	1-218-720-11	s	RESISTOR,CHIP 15K 1/16W(1608)
R118	1-218-700-11	s	RESISTOR,CHIP 2.2K 1/16W(1608)
R120	1-218-724-11	s	RESISTOR,CHIP 22K 1/16W(1608)
R121	1-218-724-11	s	RESISTOR,CHIP 22K 1/16W(1608)
R122	1-218-660-91	s	RESISTOR CHIP 47 1/16W (1608)
R123	1-218-660-91	s	RESISTOR CHIP 47 1/16W (1608)
R124	1-218-660-91	s	RESISTOR CHIP 47 1/16W (1608)
R125	1-218-716-11	s	RESISTOR,CHIP 10K 1/16W(1608)
R126	1-218-716-11	s	RESISTOR,CHIP 10K 1/16W(1608)
R127	1-218-740-11	s	RESISTOR,CHIP 100K 1/16W(1608)
R128	1-218-740-11	s	RESISTOR,CHIP 100K 1/16W(1608)
R137	1-218-668-11	s	RESISTOR,CHIP 100 1/16W (1608)
R138	1-218-668-11	s	RESISTOR,CHIP 100 1/16W (1608)
R139	1-218-720-11	s	RESISTOR,CHIP 15K 1/16W(1608)
R140	1-218-720-11	s	RESISTOR,CHIP 15K 1/16W(1608)
R141	1-218-720-11	s	RESISTOR,CHIP 15K 1/16W(1608)
R151	1-218-740-11	s	RESISTOR,CHIP 100K 1/16W(1608)
R152	1-218-740-11	s	RESISTOR,CHIP 100K 1/16W(1608)
R153	1-218-740-11	s	RESISTOR,CHIP 100K 1/16W(1608)
R154	1-218-684-11	s	RESISTOR CHIP 470 1/16W (1608)
R160	1-218-710-11	s	RESISTOR,CHIP 5.6K 1/16W(1608)
R162	1-218-710-11	s	RESISTOR,CHIP 5.6K 1/16W(1608)
R164	1-218-710-11	s	RESISTOR,CHIP 5.6K 1/16W(1608)
R166	1-218-710-11	s	RESISTOR,CHIP 5.6K 1/16W(1608)
R168	1-218-692-11	s	RESISTOR,CHIP 1.0K 1/16W(1608)
R170	1-218-710-11	s	RESISTOR,CHIP 5.6K 1/16W(1608)
R201	1-218-740-11	s	RESISTOR,CHIP 100K 1/16W(1608)
R202	1-218-740-11	s	RESISTOR,CHIP 100K 1/16W(1608)
R203	1-218-740-11	s	RESISTOR,CHIP 100K 1/16W(1608)
R204	1-218-740-11	s	RESISTOR,CHIP 100K 1/16W(1608)
R207	1-218-668-11	s	RESISTOR,CHIP 100 1/16W (1608)
R208	1-218-668-11	s	RESISTOR,CHIP 100 1/16W (1608)
R210	1-218-684-11	s	RESISTOR CHIP 470 1/16W (1608)
R211	1-218-684-11	s	RESISTOR CHIP 470 1/16W (1608)
R212	1-218-676-11	s	RESISTOR,CHIP 220 1/16W(1608)
R213	1-218-676-11	s	RESISTOR,CHIP 220 1/16W(1608)
R214	1-218-720-11	s	RESISTOR,CHIP 15K 1/16W(1608)
R215	1-218-720-11	s	RESISTOR,CHIP 15K 1/16W(1608)
R216	1-218-740-11	s	RESISTOR,CHIP 100K 1/16W(1608)
R217	1-218-740-11	s	RESISTOR,CHIP 100K 1/16W(1608)
R219	1-218-740-11	s	RESISTOR,CHIP 100K 1/16W(1608)

(EQ-72 BOARD)

Ref. No. or Q'ty	Part No.	SP	Description
R220	1-218-692-11	s	RESISTOR,CHIP 1.0K 1/16W(1608)
R241	1-218-692-11	s	RESISTOR,CHIP 1.0K 1/16W(1608)
R242	1-218-736-11	s	RESISTOR,CHIP 68K 1/16W(1608)
R243	1-218-736-11	s	RESISTOR,CHIP 68K 1/16W(1608)
R244	1-218-733-11	s	RESISTOR,CHIP 51K 1/16W (1608)
R245	1-218-708-11	s	RESISTOR,CHIP 4.7K 1/16W(1608)
R246	1-218-668-11	s	RESISTOR,CHIP 100 1/16W (1608)
R301	1-218-668-11	s	RESISTOR,CHIP 100 1/16W (1608)
R303	1-218-716-11	s	RESISTOR,CHIP 10K 1/16W(1608)
R304	1-218-716-11	s	RESISTOR,CHIP 10K 1/16W(1608)
R305	1-218-716-11	s	RESISTOR,CHIP 10K 1/16W(1608)
R306	1-218-732-11	s	RESISTOR,CHIP 47K 1/16W(1608)
R307	1-218-644-11	s	RESISTOR,METAL 10 1/16W
R308	1-218-644-11	s	RESISTOR,METAL 10 1/16W
R309	1-218-644-11	s	RESISTOR,METAL 10 1/16W
R311	1-218-689-11	s	RESISTOR CHIP 750 1/16W (1608)
R312	1-218-692-11	s	RESISTOR,CHIP 1.0K 1/16W(1608)
R313	1-218-679-91	s	RESISTOR,METAL FILM 300 1/16W
R314	1-218-724-11	s	RESISTOR,CHIP 22K 1/16W(1608)
R315	1-218-679-91	s	RESISTOR,METAL FILM 300 1/16W
R316	1-218-679-91	s	RESISTOR,METAL FILM 300 1/16W
R317	1-218-689-11	s	RESISTOR CHIP 750 1/16W (1608)
R318	1-218-688-11	s	RESISTOR,CHIP 680 1/16W(1608)
R319	1-218-665-11	s	RESISTOR CHIP 75 1/16W (1608)
R320	1-218-689-11	s	RESISTOR CHIP 750 1/16W (1608)
R321	1-218-698-11	s	RESISTOR,CHIP 1.8K 1/16W(1608)
R322	1 218 684 11	s	RESISTOR CHIP 470 1/16W (1608)
R323	1-218-735-11	s	RESISTOR CHIP 62K 1/16W(1608)
R324	1-218-716-11	s	RESISTOR,CHIP 10K 1/16W(1608)
R325	1-218-694-11	s	RESISTOR CHIP 1.2K1/16W(1608)
R326	1-218-706-11	s	RESISTOR,CHIP 3.9K 1/16W(1608)
R327	1-218-668-11	s	RESISTOR,CHIP 100 1/16W (1608)
R328	1-218-704-11	s	RESISTOR,CHIP 3.3K 1/16W(1608)
R329	1-218-660-91	s	RESISTOR CHIP 47 1/16W (1608)
R330	1-218-724-11	s	RESISTOR,CHIP 22K 1/16W(1608)
R331	1-218-738-11	s	RESISTOR,CHIP 82K 1/16W(1608)
R332	1-218-722-11	s	RESISTOR,CHIP 18K 1/16W 1608
R333	1-218-730-11	s	RESISTOR METAL FILM CHIP 39K
R334	1-218-748-11	s	RESISTOR,CHIP 220K 1/16W(1608)
R335	1-218-709-11	s	RESISTOR,METAL 5.1K 1/16W
R336	1-218-700-11	s	RESISTOR,CHIP 2.2K 1/16W(1608)
R337	1-216-864-11	s	RESISTOR,CHIP 0 1/16W (1608)
R338	1-218-716-11	s	RESISTOR,CHIP 10K 1/16W(1608)
R339	1-218-716-11	s	RESISTOR,CHIP 10K 1/16W(1608)
R340	1-218-692-11	s	RESISTOR,CHIP 1.0K 1/16W(1608)
R341	1-218-676-11	s	RESISTOR,CHIP 220 1/16W(1608)
R342	1-218-676-11	s	RESISTOR,CHIP 220 1/16W(1608)
R343	1-218-676-11	s	RESISTOR,CHIP 220 1/16W(1608)
R344	1-218-676-11	s	RESISTOR,CHIP 220 1/16W(1608)
R345	1-218-676-11	s	RESISTOR,CHIP 220 1/16W(1608)
R346	1-216-864-11	s	RESISTOR,CHIP 0 1/16W (1608)
R360	1-218-720-11	s	RESISTOR,CHIP 15K 1/16W(1608)
R361	1-218-740-11	s	RESISTOR,CHIP 100K 1/16W(1608)
R362	1-218-740-11	s	RESISTOR,CHIP 100K 1/16W(1608)
R363	1-218-740-11	s	RESISTOR,CHIP 100K 1/16W(1608)
R364	1-218-720-11	s	RESISTOR,CHIP 15K 1/16W(1608)
R365	1-218-740-11	s	RESISTOR,CHIP 100K 1/16W(1608)
R366	1-218-720-11	s	RESISTOR,CHIP 15K 1/16W(1608)
R367	1-218-720-11	s	RESISTOR,CHIP 15K 1/16W(1608)

(EQ-72 BOARD)

Ref. No. or Q'ty	Part No.	SP	Description
R370	1-218-668-11	s	RESISTOR,CHIP 100 1/16W (1608)
R371	1-218-692-11	s	RESISTOR,CHIP 1.0K 1/16W(1608)
R372	1-218-668-11	s	RESISTOR,CHIP 100 1/16W (1608)
R373	1-218-692-11	s	RESISTOR,CHIP 1.0K 1/16W(1608)
R375	1-218-692-11	s	RESISTOR,CHIP 1.0K 1/16W(1608)
R376	1-218-692-11	s	RESISTOR,CHIP 1.0K 1/16W(1608)
R377	1-218-692-11	s	RESISTOR,CHIP 1.0K 1/16W(1608)
R378	1-218-661-11	s	RESISTOR,CHIP 51 1/16W (1608)
R391	1-218-716-11	s	RESISTOR,CHIP 10K 1/16W(1608)
R392	1-218-660-91	s	RESISTOR CHIP 47 1/16W (1608)
R401	1-218-668-11	s	RESISTOR,CHIP 100 1/16W (1608)
R407	1-218-644-11	s	RESISTOR,METAL 10 1/16W
R408	1-218-644-11	s	RESISTOR,METAL 10 1/16W
R409	1-218-644-11	s	RESISTOR,METAL 10 1/16W
R411	1-218-689-11	s	RESISTOR CHIP 750 1/16W (1608)
R412	1-218-692-11	s	RESISTOR,CHIP 1.0K 1/16W(1608)
R413	1-218-679-91	s	RESISTOR,METAL FILM 300 1/16W
R414	1-218-724-11	s	RESISTOR,CHIP 22K 1/16W(1608)
R415	1-218-679-91	s	RESISTOR,METAL FILM 300 1/16W
R416	1-218-679-91	s	RESISTOR,METAL FILM 300 1/16W
R417	1-218-689-11	s	RESISTOR CHIP 750 1/16W (1608)
R418	1-218-688-11	s	RESISTOR,CHIP 680 1/16W(1608)
R419	1-218-665-11	s	RESISTOR CHIP 75 1/16W (1608)
R420	1-218-689-11	s	RESISTOR CHIP 750 1/16W (1608)
R421	1-218-698-11	s	RESISTOR,CHIP 1.8K 1/16W(1608)
R422	1-218-684-11	s	RESISTOR CHIP 470 1/16W (1608)
R423	1 218 735 11	s	RESISTOR CHIP 62K 1/16W(1608)
R424	1-218-716-11	s	RESISTOR,CHIP 10K 1/16W(1608)
R425	1-218-694-11	s	RESISTOR CHIP 1.2K1/16W(1608)
R426	1-218-706-11	s	RESISTOR,CHIP 3.9K 1/16W(1608)
R427	1-218-668-11	s	RESISTOR,CHIP 100 1/16W (1608)
R428	1-218-704-11	s	RESISTOR,CHIP 3.3K 1/16W(1608)
R429	1-218-660-91	s	RESISTOR CHIP 47 1/16W (1608)
R430	1-218-724-11	s	RESISTOR,CHIP 22K 1/16W(1608)
R431	1-218-738-11	s	RESISTOR,CHIP 82K 1/16W(1608)
R432	1-218-722-11	s	RESISTOR,CHIP 18K 1/16W 1608
R433	1-218-730-11	s	RESISTOR METAL FILM CHIP 39K
R434	1-218-748-11	s	RESISTOR,CHIP 220K 1/16W(1608)
R435	1-218-709-11	s	RESISTOR,METAL 5.1K 1/16W
R436	1-218-700-11	s	RESISTOR,CHIP 2.2K 1/16W(1608)
R437	1-216-864-11	s	RESISTOR,CHIP 0 1/16W (1608)
R438	1-218-716-11	s	RESISTOR,CHIP 10K 1/16W(1608)
R439	1-218-716-11	s	RESISTOR,CHIP 10K 1/16W(1608)
R440	1-218-692-11	s	RESISTOR,CHIP 1.0K 1/16W(1608)
R441	1-218-676-11	s	RESISTOR,CHIP 220 1/16W(1608)
R442	1-218-676-11	s	RESISTOR,CHIP 220 1/16W(1608)
R443	1-218-676-11	s	RESISTOR,CHIP 220 1/16W(1608)
R444	1-218-676-11	s	RESISTOR,CHIP 220 1/16W(1608)
R445	1-218-676-11	s	RESISTOR,CHIP 220 1/16W(1608)
R446	1-216-864-11	s	RESISTOR,CHIP 0 1/16W (1608)
R470	1-218-668-11	s	RESISTOR,CHIP 100 1/16W (1608)
R471	1-218-692-11	s	RESISTOR,CHIP 1.0K 1/16W(1608)
R472	1-218-668-11	s	RESISTOR,CHIP 100 1/16W (1608)
R473	1-218-692-11	s	RESISTOR,CHIP 1.0K 1/16W(1608)
R474	1-218-704-11	s	RESISTOR,CHIP 3.3K 1/16W(1608)
R475	1-218-692-11	s	RESISTOR,CHIP 1.0K 1/16W(1608)
R476	1-218-692-11	s	RESISTOR,CHIP 1.0K 1/16W(1608)
R477	1-218-692-11	s	RESISTOR,CHIP 1.0K 1/16W(1608)
R478	1-218-661-11	s	RESISTOR,CHIP 51 1/16W (1608)

(EQ-72 BOARD)

Ref. No. or Q'ty	Part No.	SP	Description
R503	1-218-724-11	s	RESISTOR,CHIP 22K 1/16W(1608)
R504	1-218-732-11	s	RESISTOR,CHIP 47K 1/16W(1608)
R505	1-218-732-11	s	RESISTOR,CHIP 47K 1/16W(1608)
R506	1-218-724-11	s	RESISTOR,CHIP 22K 1/16W(1608)
R507	1-218-724-11	s	RESISTOR,CHIP 22K 1/16W(1608)
R508	1-218-732-11	s	RESISTOR,CHIP 47K 1/16W(1608)
R509	1-218-732-11	s	RESISTOR,CHIP 47K 1/16W(1608)
R510	1-218-724-11	s	RESISTOR,CHIP 22K 1/16W(1608)
R511	1-218-700-11	s	RESISTOR,CHIP 2.2K 1/16W(1608)
R512	1-218-700-11	s	RESISTOR,CHIP 2.2K 1/16W(1608)
R513	1-218-732-11	s	RESISTOR,CHIP 47K 1/16W(1608)
R514	1-218-732-11	s	RESISTOR,CHIP 47K 1/16W(1608)
R515	1-218-700-11	s	RESISTOR,CHIP 2.2K 1/16W(1608)
R516	1-218-732-11	s	RESISTOR,CHIP 47K 1/16W(1608)
R517	1-218-700-11	s	RESISTOR,CHIP 2.2K 1/16W(1608)
R518	1-218-732-11	s	RESISTOR,CHIP 47K 1/16W(1608)
R519	1-218-729-11	s	RESISTOR,CHIP 36K 1/16W(1608)
R520	1-218-729-11	s	RESISTOR,CHIP 36K 1/16W(1608)
R521	1-218-729-11	s	RESISTOR,CHIP 36K 1/16W(1608)
R522	1-218-729-11	s	RESISTOR,CHIP 36K 1/16W(1608)
R523	1-218-729-11	s	RESISTOR,CHIP 36K 1/16W(1608)
R524	1-218-729-11	s	RESISTOR,CHIP 36K 1/16W(1608)
R525	1-218-729-11	s	RESISTOR,CHIP 36K 1/16W(1608)
R526	1-218-729-11	s	RESISTOR,CHIP 36K 1/16W(1608)
R527	1-218-722-11	s	RESISTOR,CHIP 18K 1/16W 1608
R528	1-218-722-11	s	RESISTOR,CHIP 18K 1/16W 1608
R529	1 218 676 11	s	RESISTOR,CHIP 220 1/16W(1608)
R530	1-218-660-91	s	RESISTOR CHIP 47 1/16W (1608)
R531	1-218-660-91	s	RESISTOR CHIP 47 1/16W (1608)
R532	1-218-716-11	s	RESISTOR,CHIP 10K 1/16W(1608)
R533	1-218-668-11	s	RESISTOR,CHIP 100 1/16W (1608)
R534	1-218-668-11	s	RESISTOR,CHIP 100 1/16W (1608)
R535	1-218-668-11	s	RESISTOR,CHIP 100 1/16W (1608)
R536	1-218-668-11	s	RESISTOR,CHIP 100 1/16W (1608)
R537	1-218-668-11	s	RESISTOR,CHIP 100 1/16W (1608)
R538	1-218-668-11	s	RESISTOR,CHIP 100 1/16W (1608)
R539	1-218-668-11	s	RESISTOR,CHIP 100 1/16W (1608)
R540	1-218-668-11	s	RESISTOR,CHIP 100 1/16W (1608)
R541	1-218-668-11	s	RESISTOR,CHIP 100 1/16W (1608)
R542	1-218-668-11	s	RESISTOR,CHIP 100 1/16W (1608)
R543	1-218-740-11	s	RESISTOR,CHIP 100K 1/16W(1608)
R700	1-218-704-11	s	RESISTOR,CHIP 3.3K 1/16W(1608)
R701	1-218-712-11	s	RESISTOR,METAL 6.8K 1/16W
R702	1-218-746-11	s	RESISTOR,METAL 180K 1/16W
R703	1-218-732-11	s	RESISTOR,CHIP 47K 1/16W(1608)
R704	1-218-692-11	s	RESISTOR,CHIP 1.0K 1/16W(1608)
R705	1-218-692-11	s	RESISTOR,CHIP 1.0K 1/16W(1608)
R706	1-218-692-11	s	RESISTOR,CHIP 1.0K 1/16W(1608)
R707	1-218-692-11	s	RESISTOR,CHIP 1.0K 1/16W(1608)
R708	1-218-712-11	s	RESISTOR,METAL 6.8K 1/16W
R709	1-218-746-11	s	RESISTOR,METAL 180K 1/16W
R710	1-218-732-11	s	RESISTOR,CHIP 47K 1/16W(1608)
R711	1-218-668-11	s	RESISTOR,CHIP 100 1/16W (1608)
R712	1-218-740-11	s	RESISTOR,CHIP 100K 1/16W(1608)
R713	1-218-740-11	s	RESISTOR,CHIP 100K 1/16W(1608)
R714	1-218-740-11	s	RESISTOR,CHIP 100K 1/16W(1608)
R715	1-218-740-11	s	RESISTOR,CHIP 100K 1/16W(1608)
R716	1-218-740-11	s	RESISTOR,CHIP 100K 1/16W(1608)
R717	1-218-668-11	s	RESISTOR,CHIP 100 1/16W (1608)

(EQ-72 BOARD)

Ref. No. or Q'ty	Part No.	SP	Description
R718	1-218-668-11	s	RESISTOR,CHIP 100 1/16W (1608)
R719	1-218-668-11	s	RESISTOR,CHIP 100 1/16W (1608)
R720	1-218-692-11	s	RESISTOR,CHIP 1.0K 1/16W(1608)
R721	1-218-668-11	s	RESISTOR,CHIP 100 1/16W (1608)
R722	1-218-668-11	s	RESISTOR,CHIP 100 1/16W (1608)
R723	1-218-692-11	s	RESISTOR,CHIP 1.0K 1/16W(1608)
R724	1-218-692-11	s	RESISTOR,CHIP 1.0K 1/16W(1608)
R725	1-218-716-11	s	RESISTOR,CHIP 10K 1/16W(1608)
R726	1-218-692-11	s	RESISTOR,CHIP 1.0K 1/16W(1608)
R727	1-218-716-11	s	RESISTOR,CHIP 10K 1/16W(1608)
R729	1-218-740-11	s	RESISTOR,CHIP 100K 1/16W(1608)
R730	1-218-716-11	s	RESISTOR,CHIP 10K 1/16W(1608)
R731	1-218-692-11	s	RESISTOR,CHIP 1.0K 1/16W(1608)
R732	1-218-716-11	s	RESISTOR,CHIP 10K 1/16W(1608)
R733	1-218-716-11	s	RESISTOR,CHIP 10K 1/16W(1608)
R734	1-218-668-11	s	RESISTOR,CHIP 100 1/16W (1608)
R735	1-218-740-11	s	RESISTOR,CHIP 100K 1/16W(1608)
R736	1-218-740-11	s	RESISTOR,CHIP 100K 1/16W(1608)
R737	1-218-740-11	s	RESISTOR,CHIP 100K 1/16W(1608)
R738	1-218-708-11	s	RESISTOR,CHIP 4.7K 1/16W(1608)
R739	1-218-692-11	s	RESISTOR,CHIP 1.0K 1/16W(1608)
R740	1-218-692-11	s	RESISTOR,CHIP 1.0K 1/16W(1608)
R741	1-218-692-11	s	RESISTOR,CHIP 1.0K 1/16W(1608)
R742	1-218-708-11	s	RESISTOR,CHIP 4.7K 1/16W(1608)
R743	1-218-668-11	s	RESISTOR,CHIP 100 1/16W (1608)
R744	1-218-740-11	s	RESISTOR,CHIP 100K 1/16W(1608)
R745	1 218 668 11	s	RESISTOR,CHIP 100 1/16W (1608)
R746	1-218-732-11	s	RESISTOR,CHIP 47K 1/16W(1608)
R750	1-218-716-11	s	RESISTOR,CHIP 10K 1/16W(1608)
R751	1-218-716-11	s	RESISTOR,CHIP 10K 1/16W(1608)
R752	1-218-716-11	s	RESISTOR,CHIP 10K 1/16W(1608)
R753	1-218-716-11	s	RESISTOR,CHIP 10K 1/16W(1608)
R754	1-218-716-11	s	RESISTOR,CHIP 10K 1/16W(1608)
S701	1-572-473-11	s	SWITCH, TACTILE
X701	1-767-464-11	s	VIBRATOR, CRYSTAL

HP-100 BOARD

Ref. No. or Q'ty	Part No.	SP	Description
1pc	A-8323-002-A	o	MOUNTED CIRCUIT BOARD, HP-100
1pc	X-3167-825-1	o	KNOB ASSY (P), VOL
1pc	7-623-510-01	s	EARTH LUG 4
C1	1-115-340-11	s	CAPACITOR CERAMIC 0.22MF/25V B
C2	1-115-340-11	s	CAPACITOR CERAMIC 0.22MF/25V B
C3	1-163-251-11	s	CAPACITOR CERAMIC 100PF/50V
C4	1-163-251-11	s	CAPACITOR CERAMIC 100PF/50V
C5	1-163-251-11	s	CAPACITOR CERAMIC 100PF/50V
C6	1-163-251-11	s	CAPACITOR CERAMIC 100PF/50V
C7	1-104-609-11	s	CAPACITOR, ELECT 100MF/4V CHIP
C8	1-104-609-11	s	CAPACITOR, ELECT 100MF/4V CHIP
C9	1-104-760-11	s	CAPACITOR CERAMIC 0.047MF/50V
C10	1-104-760-11	s	CAPACITOR CERAMIC 0.047MF/50V
CN8	1-764-007-11	o	PIN, CONNECTOR (SMD) 12P
CN9	1-565-327-11	s	JACK, LARGE TYPE (6.3MM)
FL1	1-239-895-11	s	FILTER, EMI (SMD)
FL2	1-239-895-11	s	FILTER, EMI (SMD)
IC1	8-759-711-85	s	IC NJM4580E-D
IC2	8-759-369-73	s	IC NJM4556AM
R1	1-216-627-11	s	RESISTOR,CHIP 100 1/10W (2012)
R2	1-216-627-11	s	RESISTOR,CHIP 100 1/10W (2012)
R3	1-216-661-11	s	RESISTOR,CHIP 2.7K 1/10W(2012)
R4	1-216-661-11	s	RESISTOR,CHIP 2.7K 1/10W(2012)
R5	1-216-661-11	s	RESISTOR,CHIP 2.7K 1/10W(2012)
R6	1 216 661 11	s	RESISTOR,CHIP 2.7K 1/10W(2012)
R7	1-216-683-11	s	RESISTOR CHIP 22K 1/10W (2012)
R8	1-216-683-11	s	RESISTOR CHIP 22K 1/10W (2012)
R9	1-216-683-11	s	RESISTOR CHIP 22K 1/10W (2012)
R10	1-216-683-11	s	RESISTOR CHIP 22K 1/10W (2012)
R11	1-216-617-11	s	RESISTOR,CHIP 39 1/10W(2012)
R12	1-216-617-11	s	RESISTOR,CHIP 39 1/10W(2012)
RV1	1-241-577-11	s	VAR, CARBON 20K/20K

MB-757A BOARD

Ref. No. or Q'ty	Part No.	SP	Description
1pc	A-8323-005-A	o	MOUNTED CIRCUIT BOARD, MB-757A
48pcs	3-729-061-01	s	SCREW (M2X4.5) (TYPE 1)(STEEL)
CN1	1-695-320-21	s	PIN, CONNECTOR(1.5MM)SMD 2P
CN8	1-764-007-11	o	PIN, CONNECTOR (SMD) 12P
CN12	1-691-845-11	o	CONNECTOR (SQUARE TYPE) 50P
CN22	1-691-845-11	o	CONNECTOR (SQUARE TYPE) 50P
CN32	1-691-845-11	o	CONNECTOR (SQUARE TYPE) 50P
CN42	1-691-845-11	o	CONNECTOR (SQUARE TYPE) 50P
CN52	1-691-845-11	o	CONNECTOR (SQUARE TYPE) 50P
CN62	1-691-845-11	o	CONNECTOR (SQUARE TYPE) 50P
CN72	1-691-845-11	o	CONNECTOR (SQUARE TYPE) 50P
CN82	1-691-845-11	o	CONNECTOR (SQUARE TYPE) 50P
CN101	1-778-533-11	o	CONNECTOR, BOARD TO BOARD 140P
CN201	1-778-552-11	o	PIN, CONNECTOR 30P
CN204	1-580-756-21	o	PIN, CONNECTOR 7P
CN301	1-764-441-21	s	CONNECTOR, FPC (30P)
CN302	1-764-441-21	s	CONNECTOR, FPC (30P)
CN303	1-764-441-21	s	CONNECTOR, FPC (30P)
CN401	1-691-845-11	o	CONNECTOR (SQUARE TYPE) 50P
CN600	1-573-290-21	s	PIN, CONNECTOR (4P)(SMD)1.5MM
CN601	1-766-383-11	o	PIN, CONNECTOR (12P)(SMD)1.5MM
CN700	1-766-382-11	o	PIN, CONNECTOR (10P)(SMD)1.5M
CN701	1-766-383-11	o	PIN, CONNECTOR (12P)(SMD)1.5MM
CN702	1-691-550-11	s	PIN, CONNECTOR (3P)(SMD)1.5MM
CN704	1-573-768-21	o	PIN, CONNECTOR (5P)(SMD)1.5MM
CN901	1-766-383-11	o	PIN, CONNECTOR (12P)(SMD)1.5MM

PA-218 BOARD

Ref. No. or Q'ty	Part No.	SP	Description
1pc	A-8316-916-A	o	MOUNTED CIRCUIT BOARD, PA-218
1pc	3-613-301-01	o	INSULATING SHEET(PA-218)
C800	1-164-315-11	s	CAPACITOR,CERAMIC 470PF/50V CH
C801	1-164-739-11	s	CAPACITOR CERAMIC 560PF (1608)
C803	1-162-925-11	s	CAPACITOR,CERAMIC 68PF/50V CH
C804	1-162-925-11	s	CAPACITOR,CERAMIC 68PF/50V CH
C805	1-162-925-11	s	CAPACITOR,CERAMIC 68PF/50V CH
C806	1-162-925-11	s	CAPACITOR,CERAMIC 68PF/50V CH
C807	1-110-569-11	s	CAPACITOR CHIP TANTAL47MF/6.3V
C808	1-110-569-11	s	CAPACITOR CHIP TANTAL47MF/6.3V
C809	1-104-553-11	s	CAPACITOR FILM 0.015MF/16V
C810	1-104-553-11	s	CAPACITOR FILM 0.015MF/16V
C811	1-164-230-11	s	CAPACITOR,CERAMIC 220PF/50V
C812	1-164-230-11	s	CAPACITOR,CERAMIC 220PF/50V
C813	1-104-851-11	s	CAPACITOR,TANTALUM 10MF/10V
C814	1-104-851-11	s	CAPACITOR,TANTALUM 10MF/10V
C815	1-107-826-11	s	CAPACITOR,CHIP CERAMIC 0.1MF
C816	1-107-826-11	s	CAPACITOR,CHIP CERAMIC 0.1MF
C817	1-162-963-11	s	CAPACITOR,CERAMIC 680PF/50V(B)
C818	1-162-963-11	s	CAPACITOR,CERAMIC 680PF/50V(B)
C819	1-104-549-11	s	CAPACITOR FILM 0.0068MF/16V
C820	1-104-549-11	s	CAPACITOR FILM 0.0068MF/16V
C821	1-107-826-11	s	CAPACITOR,CHIP CERAMIC 0.1MF
C822	1-107-826-11	s	CAPACITOR,CHIP CERAMIC 0.1MF
C823	1-104-851-11	s	CAPACITOR,TANTALUM 10MF/10V
C824	1-104-851-11	s	CAPACITOR,TANTALUM 10MF/10V
C825	1 164 227 11	s	CAPACITOR,CERAMIC 0.022MF/25V
C826	1-164-227-11	s	CAPACITOR,CERAMIC 0.022MF/25V
C827	1-162-927-11	s	CAPACITOR,CERAMIC 100PF/50V CH
C828	1-162-927-11	s	CAPACITOR,CERAMIC 100PF/50V CH
C829	1-113-991-11	s	CAPACITOR TANTALUM 33MF/16V
C830	1-113-991-11	s	CAPACITOR TANTALUM 33MF/16V
C831	1-113-991-11	s	CAPACITOR TANTALUM 33MF/16V
C832	1-113-991-11	s	CAPACITOR TANTALUM 33MF/16V
CN1	1-580-789-21	o	PIN,CONNECTOR (SMD)
CN204	1-580-756-21	o	PIN,CONNECTOR 7P
CN602	1-580-057-11	o	PIN,CONNECTOR 4P
CN900	1-580-057-11	o	PIN,CONNECTOR 4P
D800	8-719-404-35	s	DIODE MA141WK
IC801	8-759-700-84	s	IC NJM2041MD
IC802	8-759-700-84	s	IC NJM2041MD
Q800	8-729-029-14	s	TRANSISTOR DTC144EUA-T106
Q801	8-729-028-91	s	TRANSISTOR DTA144EUA-T106
Q802	8-729-029-14	s	TRANSISTOR DTC144EUA-T106
Q803	8-729-029-14	s	TRANSISTOR DTC144EUA-T106
Q804	8-729-028-91	s	TRANSISTOR DTA144EUA-T106
Q805	8-729-028-91	s	TRANSISTOR DTA144EUA-T106
Q806	8-729-028-91	s	TRANSISTOR DTA144EUA-T106
Q807	8-729-141-53	s	TRANSISTOR 2SK94-X2X3X4
Q808	8-729-141-53	s	TRANSISTOR 2SK94-X2X3X4
Q809	8-729-013-37	s	TRANSISTOR 2SC4213-AB-TE85L
Q810	8-729-013-37	s	TRANSISTOR 2SC4213-AB-TE85L
Q811	8-729-013-37	s	TRANSISTOR 2SC4213-AB-TE85L
Q812	8-729-013-37	s	TRANSISTOR 2SC4213-AB-TE85L
Q813	8-729-013-37	s	TRANSISTOR 2SC4213-AB-TE85L
Q814	8-729-013-37	s	TRANSISTOR 2SC4213-AB-TE85L

(PA-218 BOARD)

Ref. No. or Q'ty	Part No.	SP	Description
Q815	8-729-141-75	s	TRANSISTOR 2SD596DV345
Q816	8-729-141-48	s	TRANSISTOR 2SB624-BV345
R800	1-218-732-11	s	RESISTOR,CHIP 47K 1/16W(1608)
R801	1-218-738-11	s	RESISTOR,CHIP 82K 1/16W(1608)
R802	1-218-670-11	s	RESISTOR,CHIP 120 1/16W (1608)
R803	1-218-738-11	s	RESISTOR,CHIP 82K 1/16W(1608)
R804	1-218-670-11	s	RESISTOR,CHIP 120 1/16W (1608)
R805	1-218-740-11	s	RESISTOR,CHIP 100K 1/16W(1608)
R806	1-218-740-11	s	RESISTOR,CHIP 100K 1/16W(1608)
R807	1-218-696-11	s	RESISTOR CHIP 1.5K 1/16W(1608)
R808	1-218-696-11	s	RESISTOR CHIP 1.5K 1/16W(1608)
R809	1-216-863-11	s	RESISTOR,CHIP 3.3M 1/16W 1608
R810	1-216-863-11	s	RESISTOR,CHIP 3.3M 1/16W 1608
R811	1-216-863-11	s	RESISTOR,CHIP 3.3M 1/16W 1608
R812	1-216-863-11	s	RESISTOR,CHIP 3.3M 1/16W 1608
R813	1-218-716-11	s	RESISTOR,CHIP 10K 1/16W(1608)
R814	1-218-716-11	s	RESISTOR,CHIP 10K 1/16W(1608)
R815	1-218-700-11	s	RESISTOR,CHIP 2.2K 1/16W(1608)
R816	1-218-700-11	s	RESISTOR,CHIP 2.2K 1/16W(1608)
R817	1-218-716-11	s	RESISTOR,CHIP 10K 1/16W(1608)
R818	1-218-716-11	s	RESISTOR,CHIP 10K 1/16W(1608)
R819	1-218-716-11	s	RESISTOR,CHIP 10K 1/16W(1608)
R820	1-218-716-11	s	RESISTOR,CHIP 10K 1/16W(1608)
R821	1-218-716-11	s	RESISTOR,CHIP 10K 1/16W(1608)
R822	1-218-716-11	s	RESISTOR,CHIP 10K 1/16W(1608)
R823	1-218-716-11	s	RESISTOR,CHIP 10K 1/16W(1608)
R824	1 218 716 11	s	RESISTOR,CHIP 10K 1/16W(1608)
R825	1-218-716-11	s	RESISTOR,CHIP 10K 1/16W(1608)
R826	1-218-716-11	s	RESISTOR,CHIP 10K 1/16W(1608)
R827	1-218-716-11	s	RESISTOR,CHIP 10K 1/16W(1608)
R828	1-218-716-11	s	RESISTOR,CHIP 10K 1/16W(1608)
R829	1-218-700-11	s	RESISTOR,CHIP 2.2K 1/16W(1608)
R830	1-218-700-11	s	RESISTOR,CHIP 2.2K 1/16W(1608)
R831	1-218-716-11	s	RESISTOR,CHIP 10K 1/16W(1608)
R832	1-218-716-11	s	RESISTOR,CHIP 10K 1/16W(1608)
R833	1-218-688-11	s	RESISTOR,CHIP 680 1/16W(1608)
R834	1-218-688-11	s	RESISTOR,CHIP 680 1/16W(1608)
R835	1-218-708-11	s	RESISTOR,CHIP 4.7K 1/16W(1608)
R836	1-218-708-11	s	RESISTOR,CHIP 4.7K 1/16W(1608)
R837	1-218-688-11	s	RESISTOR,CHIP 680 1/16W(1608)
R838	1-218-688-11	s	RESISTOR,CHIP 680 1/16W(1608)
R839	1-218-666-11	s	RESISTOR CHIP 82 1/16W (1608)
R840	1-218-666-11	s	RESISTOR CHIP 82 1/16W (1608)
RV800	1-241-269-11	s	RESISTOR, ADJ, CERMET 500K
RV801	1-241-269-11	s	RESISTOR, ADJ, CERMET 500K
RV802	1-241-263-11	s	RESISTOR ADJ 5K (CERMET)
RV803	1-241-263-11	s	RESISTOR ADJ 5K (CERMET)
RV804	1-241-262-11	s	RESISTOR ADJ 2K (CERMET)
RV805	1-241-262-11	s	RESISTOR ADJ 2K (CERMET)
S800	1-692-881-41	s	SWITCH, SLIDE
S801	1-692-881-41	s	SWITCH, SLIDE

http://getMANUAL.com

PSW-72 BOARD

Ref. No. or Q'ty	Part No.	SP	Description
1pc	A-8322-971-A	o	MOUNTED CIRCUIT BOARD, PSW-72
CN1	1-695-320-21	s	PIN, CONNECTOR(1.5MM)SMD 2P
S1	1-762-001-11	s	SWITCH, TOGGLE

RE-150 BOARD

Ref. No. or Q'ty	Part No.	SP	Description
1pc	A-8316-734-A	s	MOUNTED CIRCUIT BOARD, RE-150
3pcs	3-729-061-01	s	SCREW (M2X4.5) (TYPE 1)(STEEL)
C1	1-164-182-11	s	CAPACITOR, CERAMIC 3300PF/100V
C2	1-115-339-11	s	CAPACITOR CERAMIC 0.1MF/50V
C3	1-115-339-11	s	CAPACITOR CERAMIC 0.1MF/50V
C4	1-115-339-11	s	CAPACITOR CERAMIC 0.1MF/50V
C5	1-115-339-11	s	CAPACITOR CERAMIC 0.1MF/50V
C6	1-163-037-11	s	CAPACITOR,CHIP CERAMIC 0.022MF
C7	1-163-037-11	s	CAPACITOR,CHIP CERAMIC 0.022MF
C8	1-126-946-11	s	CAPACITOR,ELECT 6800MF/25V
C9	1-126-943-11	s	CAPACITOR,ELECT 2200MF/25V
C10	1-107-686-11	s	CAPACITOR,CHIP ELECT 4.7MF/16V
C11	1-115-339-11	s	CAPACITOR CERAMIC 0.1MF/50V
C12	1-115-339-11	s	CAPACITOR CERAMIC 0.1MF/50V
C13	1-115-339-11	s	CAPACITOR CERAMIC 0.1MF/50V
C14	1-107-689-21	s	CAPACITOR TANTALUM 1MF/35V
C15	1-107-689-21	s	CAPACITOR TANTALUM 1MF/35V
C16	1-115-339-11	s	CAPACITOR CERAMIC 0.1MF/50V
C17	1-107-686-11	s	CAPACITOR,CHIP ELECT 4.7MF/16V
C18	1-115-339-11	s	CAPACITOR CERAMIC 0.1MF/50V
C19	1-107-689-21	s	CAPACITOR TANTALUM 1MF/35V
C20	1-115-339-11	s	CAPACITOR CERAMIC 0.1MF/50V
C21	1-104-478-11	s	CAPACITOR TANTALUM 10MF/35V
C22	1-115-339-11	s	CAPACITOR CERAMIC 0.1MF/50V
C23	1-163-037-11	s	CAPACITOR,CHIP CERAMIC 0.022MF
C24	1-107-689-21	s	CAPACITOR TANTALUM 1MF/35V
C25	1-115-339-11	s	CAPACITOR CERAMIC 0.1MF/50V
C26	1-163-133-00	s	CAPACITOR,CHIP CERAMIC 470PF
C27	1-115-339-11	s	CAPACITOR CERAMIC 0.1MF/50V
C28	1-107-689-21	s	CAPACITOR TANTALUM 1MF/35V
C29	1-107-686-11	s	CAPACITOR,CHIP ELECT 4.7MF/16V
C30	1-115-339-11	s	CAPACITOR CERAMIC 0.1MF/50V
C31	1-115-339-11	s	CAPACITOR CERAMIC 0.1MF/50V
C32	1-115-339-11	s	CAPACITOR CERAMIC 0.1MF/50V
C33	1-107-686-11	s	CAPACITOR,CHIP ELECT 4.7MF/16V
C34	1-115-339-11	s	CAPACITOR CERAMIC 0.1MF/50V
C35	1-107-686-11	s	CAPACITOR,CHIP ELECT 4.7MF/16V
C36	1-115-339-11	s	CAPACITOR CERAMIC 0.1MF/50V
C37	1-115-339-11	s	CAPACITOR CERAMIC 0.1MF/50V
C38	1-115-339-11	s	CAPACITOR CERAMIC 0.1MF/50V
C39	1-163-251-11	s	CAPACITOR CERAMIC 100PF/50V
C40	1-163-251-11	s	CAPACITOR CERAMIC 100PF/50V
C41	1-163-037-11	s	CAPACITOR,CHIP CERAMIC 0.022MF
C101	1-115-339-11	s	CAPACITOR CERAMIC 0.1MF/50V
C102	1-163-037-11	s	CAPACITOR,CHIP CERAMIC 0.022MF
C103	1-163-037-11	s	CAPACITOR,CHIP CERAMIC 0.022MF
C104	1-127-513-00	s	CAPACITOR,ELECT 15MF/25V
C105	1-115-339-11	s	CAPACITOR CERAMIC 0.1MF/50V
C106	1-113-577-11	s	CAPACITOR,ELECT 47MF/16V
C107	1-115-339-11	s	CAPACITOR CERAMIC 0.1MF/50V
C108	1-111-034-11	s	CAPACITOR,ELECT 220MF/16V(105C
C109	1-107-687-11	s	CAPACITOR TANTALUM 3.3MF/20V
C110	1-163-037-11	s	CAPACITOR,CHIP CERAMIC 0.022MF
C201	1-115-339-11	s	CAPACITOR CERAMIC 0.1MF/50V
C202	1-163-037-11	s	CAPACITOR,CHIP CERAMIC 0.022MF
C203	1-163-037-11	s	CAPACITOR,CHIP CERAMIC 0.022MF
C204	1-127-513-00	s	CAPACITOR,ELECT 15MF/25V
C205	1-115-339-11	s	CAPACITOR CERAMIC 0.1MF/50V

(RE-150 BOARD)

Ref. No. or Q'ty	Part No.	SP	Description
C206	1-113-577-11	s	CAPACITOR,ELECT 47MF/16V
C207	1-115-339-11	s	CAPACITOR CERAMIC 0.1MF/50V
C208	1-111-034-11	s	CAPACITOR,ELECT 220MF/16V(105C
C209	1-115-339-11	s	CAPACITOR CERAMIC 0.1MF/50V
C210	1-107-687-11	s	CAPACITOR TANTALUM 3.3MF/20V
C211	1-115-339-11	s	CAPACITOR CERAMIC 0.1MF/50V
C212	1-163-017-00	s	CAPACITOR,CHIP CERAMIC 4700PF
C301	1-115-339-11	s	CAPACITOR CERAMIC 0.1MF/50V
C302	1-163-037-11	s	CAPACITOR,CHIP CERAMIC 0.022MF
C303	1-163-037-11	s	CAPACITOR,CHIP CERAMIC 0.022MF
C304	1-127-513-00	s	CAPACITOR,ELECT 15MF/25V
C305	1-115-339-11	s	CAPACITOR CERAMIC 0.1MF/50V
C306	1-127-518-11	s	CAPACITOR,ELECT 100MF/16V
C307	1-115-339-11	s	CAPACITOR CERAMIC 0.1MF/50V
C308	1-111-034-11	s	CAPACITOR,ELECT 220MF/16V(105C
C310	1-107-687-11	s	CAPACITOR TANTALUM 3.3MF/20V
C311	1-163-037-11	s	CAPACITOR,CHIP CERAMIC 0.022MF
C351	1-115-339-11	s	CAPACITOR CERAMIC 0.1MF/50V
C352	1-163-037-11	s	CAPACITOR,CHIP CERAMIC 0.022MF
C353	1-163-037-11	s	CAPACITOR,CHIP CERAMIC 0.022MF
C354	1-127-513-00	s	CAPACITOR,ELECT 15MF/25V
C355	1-115-339-11	s	CAPACITOR CERAMIC 0.1MF/50V
C356	1-127-518-11	s	CAPACITOR,ELECT 100MF/16V
C357	1-115-339-11	s	CAPACITOR CERAMIC 0.1MF/50V
C358	1-111-034-11	s	CAPACITOR,ELECT 220MF/16V(105C
C359	1-107-687-11	s	CAPACITOR TANTALUM 3.3MF/20V
C360	1 163 037 11	s	CAPACITOR,CHIP CERAMIC 0.022MF
C401	1-115-339-11	s	CAPACITOR CERAMIC 0.1MF/50V
C402	1-163-037-11	s	CAPACITOR,CHIP CERAMIC 0.022MF
C403	1-163-037-11	s	CAPACITOR,CHIP CERAMIC 0.022MF
C404	1-127-513-00	s	CAPACITOR,ELECT 15MF/25V
C405	1-115-339-11	s	CAPACITOR CERAMIC 0.1MF/50V
C406	1-113-577-11	s	CAPACITOR,ELECT 47MF/16V
C407	1-115-339-11	s	CAPACITOR CERAMIC 0.1MF/50V
C408	1-111-034-11	s	CAPACITOR,ELECT 220MF/16V(105C
C409	1-107-687-11	s	CAPACITOR TANTALUM 3.3MF/20V
C410	1-163-037-11	s	CAPACITOR,CHIP CERAMIC 0.022MF
C501	1-115-339-11	s	CAPACITOR CERAMIC 0.1MF/50V
C502	1-163-037-11	s	CAPACITOR,CHIP CERAMIC 0.022MF
C503	1-163-037-11	s	CAPACITOR,CHIP CERAMIC 0.022MF
C504	1-127-513-00	s	CAPACITOR,ELECT 15MF/25V
C505	1-115-339-11	s	CAPACITOR CERAMIC 0.1MF/50V
C506	1-127-518-11	s	CAPACITOR,ELECT 100MF/16V
C507	1-115-339-11	s	CAPACITOR CERAMIC 0.1MF/50V
C508	1-111-034-11	s	CAPACITOR,ELECT 220MF/16V(105C
C509	1-107-687-11	s	CAPACITOR TANTALUM 3.3MF/20V
C510	1-104-760-11	s	CAPACITOR CERAMIC 0.047MF/50V
C551	1-115-339-11	s	CAPACITOR CERAMIC 0.1MF/50V
C552	1-163-037-11	s	CAPACITOR,CHIP CERAMIC 0.022MF
C553	1-163-037-11	s	CAPACITOR,CHIP CERAMIC 0.022MF
C554	1-127-513-00	s	CAPACITOR,ELECT 15MF/25V
C555	1-115-339-11	s	CAPACITOR CERAMIC 0.1MF/50V
C556	1-127-518-11	s	CAPACITOR,ELECT 100MF/16V
C557	1-115-339-11	s	CAPACITOR CERAMIC 0.1MF/50V
C558	1-111-034-11	s	CAPACITOR,ELECT 220MF/16V(105C
C559	1-107-687-11	s	CAPACITOR TANTALUM 3.3MF/20V
C560	1-104-760-11	s	CAPACITOR CERAMIC 0.047MF/50V
C601	1-115-339-11	s	CAPACITOR CERAMIC 0.1MF/50V
C602	1-163-037-11	s	CAPACITOR,CHIP CERAMIC 0.022MF

(RE-150 BOARD)

Ref. No. or Q'ty	Part No.	SP	Description	
C603	1-163-037-11	s	CAPACITOR,CHIP CERAMIC 0.022MF	
C604	1-127-513-00	s	CAPACITOR,ELECT 15MF/25V	
C605	1-115-339-11	s	CAPACITOR CERAMIC 0.1MF/50V	
C606	1-113-577-11	s	CAPACITOR,ELECT 47MF/16V	
C607	1-115-339-11	s	CAPACITOR CERAMIC 0.1MF/50V	
C608	1-111-034-11	s	CAPACITOR,ELECT 220MF/16V(105C	
C609	1-115-339-11	s	CAPACITOR CERAMIC 0.1MF/50V	
C610	1-107-687-11	s	CAPACITOR TANTALUM 3.3MF/20V	
C611	1-115-339-11	s	CAPACITOR CERAMIC 0.1MF/50V	
C612	1-163-017-00	s	CAPACITOR,CHIP CERAMIC 4700PF	
C701	1-127-513-00	s	CAPACITOR,ELECT 15MF/25V	
C702	1-115-339-11	s	CAPACITOR CERAMIC 0.1MF/50V	
C703	1-111-110-11	s	CAPACITOR ELECT 39MF/50V(105C)	
C704	1-115-339-11	s	CAPACITOR CERAMIC 0.1MF/50V	
C705	1-111-110-11	s	CAPACITOR ELECT 39MF/50V(105C)	
C706	1-135-072-21	s	CAPACITOR,TANTALUM 0.22MF/35V	
C707	1-163-037-11	s	CAPACITOR,CHIP CERAMIC 0.022MF	
C801	1-127-513-00	s	CAPACITOR,ELECT 15MF/25V	
C802	1-115-339-11	s	CAPACITOR CERAMIC 0.1MF/50V	
C803	1-107-686-11	s	CAPACITOR,CHIP ELECT 4.7MF/16V	
C804	1-163-009-11	s	CAPACITOR,CERAMIC 1000PF/50V	
C900	1-115-339-11	s	CAPACITOR CERAMIC 0.1MF/50V	
C901	1-126-399-11	s	CAPACITOR ELECT 10MF/35V(CHIP)	
C902	1-115-339-11	s	CAPACITOR CERAMIC 0.1MF/50V	
C903	1-126-399-11	s	CAPACITOR ELECT 10MF/35V(CHIP)	
C904	1-115-339-11	s	CAPACITOR CERAMIC 0.1MF/50V	
C905	1 107 689 21	s	CAPACITOR TANTALUM 1MF/35V	
C906	1-115-339-11	s	CAPACITOR CERAMIC 0.1MF/50V	
C907	1-115-339-11	s	CAPACITOR CERAMIC 0.1MF/50V	
CN1	1-564-708-11	o	PIN,CONNECTOR (6P)	
CN2	1-566-982-11	o	PIN HEADER,STRAIGHT 9P	
CN3	1-564-704-11	s	PIN,CONNECTOR (2P)	
D1	8-719-801-78	s	DIODE 1SS184	
D2	8-719-029-67	s	DIODE RD5.6UJN-T1	
D3	8-719-040-04	s	DIODE MA-721WK-TX	
D4	8-719-027-45	s	DIODE MA740	
D5	8-719-027-45	s	DIODE MA740	
D6	8-719-104-34	s	DIODE 1S2836	
D7	8-719-938-75	s	DIODE SB05-05CP	(RECTI)
D8	8-719-938-75	s	DIODE SB05-05CP	(RECTI)
D9	8-719-801-78	s	DIODE 1SS184	
D10	8-719-104-34	s	DIODE 1S2836	
D11	8-719-104-34	s	DIODE 1S2836	
D12	8-719-801-78	s	DIODE 1SS184	
D13	8-719-104-34	s	DIODE 1S2836	
D101	8-719-938-75	s	DIODE SB05-05CP	(RECTI)
D102	8-719-938-75	s	DIODE SB05-05CP	(RECTI)
D201	8-719-938-75	s	DIODE SB05-05CP	(RECTI)
D202	8-719-938-75	s	DIODE SB05-05CP	(RECTI)
D301	8-719-938-75	s	DIODE SB05-05CP	(RECTI)
D302	8-719-938-75	s	DIODE SB05-05CP	(RECTI)
D351	8-719-938-75	s	DIODE SB05-05CP	(RECTI)
D352	8-719-938-75	s	DIODE SB05-05CP	(RECTI)
D401	8-719-938-75	s	DIODE SB05-05CP	(RECTI)
D402	8-719-938-75	s	DIODE SB05-05CP	(RECTI)
D501	8-719-938-75	s	DIODE SB05-05CP	(RECTI)
D502	8-719-938-75	s	DIODE SB05-05CP	(RECTI)
D551	8-719-938-75	s	DIODE SB05-05CP	(RECTI)

(RE-150 BOARD)

Ref. No. or Q'ty	Part No.	SP	Description	
D552	8-719-938-75	s	DIODE SB05-05CP	(RECTI)
D601	8-719-938-75	s	DIODE SB05-05CP	(RECTI)
D602	8-719-938-75	s	DIODE SB05-05CP	(RECTI)
D701	8-719-210-43	s	DIODE EC10QS06	
D801	8-719-104-34	s	DIODE 1S2836	
D802	8-719-104-34	s	DIODE 1S2836	
D803	8-719-104-34	s	DIODE 1S2836	
D804	8-719-104-34	s	DIODE 1S2836	
D805	8-719-104-34	s	DIODE 1S2836	
D806	8-719-104-34	s	DIODE 1S2836	
D901	8-719-104-34	s	DIODE 1S2836	
IC1	8-759-560-89	s	IC MB3761PF-ER	
IC2	8-759-260-57	s	IC TL1451ACPW-E05	
IC3	8-759-260-57	s	IC TL1451ACPW-E05	
IC4	8-759-260-57	s	IC TL1451ACPW-E05	
IC5	8-759-260-57	s	IC TL1451ACPW-E05	
IC6	8-759-066-68	s	IC REF-03GS	
IC7	8-759-260-57	s	IC TL1451ACPW-E05	
IC8	8-729-046-11	s	TRANSISTOR SI4420DY-T1	
IC9	8-729-046-11	s	TRANSISTOR SI4420DY-T1	
IC10	8-729-046-11	s	TRANSISTOR SI4420DY-T1	
IC11	8-759-234-20	s	IC TC7S08F	
IC12	8-729-046-11	s	TRANSISTOR SI4420DY-T1	
IC13	8-729-046-11	s	TRANSISTOR SI4420DY-T1	
IC14	8-729-046-11	s	TRANSISTOR SI4420DY-T1	
IC18	8-729-046-11	s	TRANSISTOR SI4420DY-T1	
IC19	8-729-046-11	s	TRANSISTOR SI4420DY-T1	
IC20	8-729-046-11	s	TRANSISTOR SI4420DY-T1	
IC21	8-729-046-11	s	TRANSISTOR SI4420DY-T1	
IC22	8-729-046-11	s	TRANSISTOR SI4420DY-T1	
IC23	8-729-046-11	s	TRANSISTOR SI4420DY-T1	
IC101	8-729-045-53	s	TRANSISTOR SI4431DY-T1	
IC201	8-729-045-53	s	TRANSISTOR SI4431DY-T1	
IC301	8-729-045-53	s	TRANSISTOR SI4431DY-T1	
IC351	8-729-045-53	s	TRANSISTOR SI4431DY-T1	
IC401	8-729-045-53	s	TRANSISTOR SI4431DY-T1	
IC501	8-729-045-53	s	TRANSISTOR SI4431DY-T1	
IC551	8-729-045-53	s	TRANSISTOR SI4431DY-T1	
IC601	8-729-045-53	s	TRANSISTOR SI4431DY-T1	
IC900	8-759-542-91	s	IC S-80840ANUP-ED4-T2	
IC901	8-759-710-88	s	IC NJM431U	
IC902	8-759-560-89	s	IC MB3761PF-ER	
IC903	8-759-523-97	s	IC TC74VHC123AFT(EL)	
IC904	8-759-234-20	s	IC TC7S08F	
L101	1-409-579-11	s	COIL, CHOKE 8.2UH	
L102	1-411-967-11	s	COIL, CHOKE 33UH	
L103	1-409-579-11	s	COIL, CHOKE 8.2UH	
L201	1-409-579-11	s	COIL, CHOKE 8.2UH	
L202	1-411-967-11	s	COIL, CHOKE 33UH	
L203	1-409-579-11	s	COIL, CHOKE 8.2UH	
L301	1-409-579-11	s	COIL, CHOKE 8.2UH	
L302	1-411-967-11	s	COIL, CHOKE 33UH	
L303	1-409-579-11	s	COIL, CHOKE 8.2UH	
L304	1-409-579-11	s	COIL, CHOKE 8.2UH	
L351	1-409-579-11	s	COIL, CHOKE 8.2UH	
L352	1-411-967-11	s	COIL, CHOKE 33UH	
L353	1-409-579-11	s	COIL, CHOKE 8.2UH	
L354	1-409-579-11	s	COIL, CHOKE 8.2UH	

(RE-150 BOARD)

Ref. No. or Q'ty	Part No.	SP	Description
L401	1-409-579-11	s	COIL, CHOKE 8.2UH
L402	1-411-967-11	s	COIL, CHOKE 33UH
L403	1-409-579-11	s	COIL, CHOKE 8.2UH
L501	1-409-579-11	s	COIL, CHOKE 8.2UH
L502	1-411-967-11	s	COIL, CHOKE 33UH
L503	1-409-579-11	s	COIL, CHOKE 8.2UH
L504	1-409-579-11	s	COIL, CHOKE 8.2UH
L551	1-409-579-11	s	COIL, CHOKE 8.2UH
L552	1-411-967-11	s	COIL, CHOKE 33UH
L553	1-409-579-11	s	COIL, CHOKE 8.2UH
L554	1-409-579-11	s	COIL, CHOKE 8.2UH
L601	1-409-579-11	s	COIL, CHOKE 8.2UH
L602	1-411-967-11	s	COIL, CHOKE 33UH
L603	1-409-579-11	s	COIL, CHOKE 8.2UH
L701	1-409-579-11	s	COIL, CHOKE 8.2UH
L702	1-409-669-11	s	COIL, CHOKE 470UH
Q1	8-729-047-61	s	TRANSISTOR SI4925DY-T1
Q2	8-729-112-65	s	TRANSISTOR 2SA1462
Q3	8-729-120-28	s	TRANSISTOR 2SC1623-L5L6
Q4	8-729-027-38	s	TRANSISTOR DTA144EAK-T146
Q5	8-729-027-38	s	TRANSISTOR DTA144EAK-T146
Q6	8-729-112-65	s	TRANSISTOR 2SA1462
Q7	8-729-120-28	s	TRANSISTOR 2SC1623-L5L6
Q10	8-729-120-28	s	TRANSISTOR 2SC1623-L5L6
Q11	8-729-120-28	s	TRANSISTOR 2SC1623-L5L6
Q15	8-729-112-65	s	TRANSISTOR 2SA1462
Q16	8-729-120-28	s	TRANSISTOR 2SC1623-L5L6
Q17	8-729-120-28	s	TRANSISTOR 2SC1623-L5L6
Q24	8-729-118-56	s	FET 2SK852-X2
Q25	8-729-024-45	s	TRANSISTOR 2SK2315TY
Q26	1-801-806-11	s	TRANSISTOR DTC144EAK
Q27	8-729-120-28	s	TRANSISTOR 2SC1623-L5L6
Q101	8-729-012-35	s	FET 2SK711-BL
Q102	8-729-120-28	s	TRANSISTOR 2SC1623-L5L6
Q103	8-729-112-65	s	TRANSISTOR 2SA1462
Q104	8-729-031-39	s	TRANSISTOR MTD20N03HDL
Q105	8-729-027-44	s	TRANSISTOR DTC114TKA-T146
Q201	8-729-012-35	s	FET 2SK711-BL
Q202	8-729-120-28	s	TRANSISTOR 2SC1623-L5L6
Q203	8-729-112-65	s	TRANSISTOR 2SA1462
Q204	8-729-031-39	s	TRANSISTOR MTD20N03HDL
Q210	8-729-027-44	s	TRANSISTOR DTC114TKA-T146
Q301	8-729-012-35	s	FET 2SK711-BL
Q302	8-729-120-28	s	TRANSISTOR 2SC1623-L5L6
Q303	8-729-112-65	s	TRANSISTOR 2SA1462
Q304	8-729-031-39	s	TRANSISTOR MTD20N03HDL
Q305	8-729-027-44	s	TRANSISTOR DTC114TKA-T146
Q351	8-729-012-35	s	FET 2SK711-BL
Q352	8-729-120-28	s	TRANSISTOR 2SC1623-L5L6
Q353	8-729-112-65	s	TRANSISTOR 2SA1462
Q354	8-729-031-39	s	TRANSISTOR MTD20N03HDL
Q355	8-729-027-44	s	TRANSISTOR DTC114TKA-T146
Q401	8-729-012-35	s	FET 2SK711-BL
Q402	8-729-120-28	s	TRANSISTOR 2SC1623-L5L6
Q403	8-729-112-65	s	TRANSISTOR 2SA1462
Q404	8-729-031-39	s	TRANSISTOR MTD20N03HDL
Q405	8-729-027-44	s	TRANSISTOR DTC114TKA-T146
Q501	8-729-012-35	s	FET 2SK711-BL

(RE-150 BOARD)

Ref. No. or Q'ty	Part No.	SP	Description
Q502	8-729-120-28	s	TRANSISTOR 2SC1623-L5L6
Q503	8-729-112-65	s	TRANSISTOR 2SA1462
Q504	8-729-031-39	s	TRANSISTOR MTD20N03HDL
Q505	8-729-027-44	s	TRANSISTOR DTC114TKA-T146
Q551	8-729-012-35	s	FET 2SK711-BL
Q552	8-729-120-28	s	TRANSISTOR 2SC1623-L5L6
Q553	8-729-112-65	s	TRANSISTOR 2SA1462
Q554	8-729-031-39	s	TRANSISTOR MTD20N03HDL
Q555	8-729-027-44	s	TRANSISTOR DTC114TKA-T146
Q601	8-729-012-35	s	FET 2SK711-BL
Q602	8-729-120-28	s	TRANSISTOR 2SC1623-L5L6
Q603	8-729-112-65	s	TRANSISTOR 2SA1462
Q604	8-729-031-39	s	TRANSISTOR MTD20N03HDL
Q605	8-729-027-44	s	TRANSISTOR DTC114TKA-T146
Q701	8-729-120-28	s	TRANSISTOR 2SC1623-L5L6
Q702	8-729-120-28	s	TRANSISTOR 2SC1623-L5L6
Q703	8-729-112-65	s	TRANSISTOR 2SA1462
Q704	8-729-041-36	s	TRANSISTOR MTD20N06HDLT4
Q705	8-729-027-44	s	TRANSISTOR DTC114TKA-T146
Q801	8-729-120-28	s	TRANSISTOR 2SC1623-L5L6
Q802	8-729-120-28	s	TRANSISTOR 2SC1623-L5L6
Q803	8-729-120-28	s	TRANSISTOR 2SC1623-L5L6
Q804	8-729-120-28	s	TRANSISTOR 2SC1623-L5L6
Q805	8-729-216-22	s	TRANSISTOR 2SA1162-G
Q900	8-729-024-45	s	TRANSISTOR 2SK2315TY
Q901	8-729-118-56	s	FET 2SK852-X2
Q902	8 729 120 28	s	TRANSISTOR 2SC1623 L5L6
Q904	8-729-027-38	s	TRANSISTOR DTA144EAK-T146
Q905	1-801-806-11	s	TRANSISTOR DTC144EAK
Q907	8-729-024-45	s	TRANSISTOR 2SK2315TY
Q921	8-729-120-28	s	TRANSISTOR 2SC1623-L5L6
R1	1-216-671-11	s	RESISTOR,CHIP 6.8K 1/10W(2012)
R2	1-216-689-11	s	RESISTOR,CHIP 39K 1/10W(2012)
R3	1-218-768-11	s	RESISTOR CHIP 470K 1/10W(2012)
R4	1-216-699-11	s	RESISTOR,CHIP 100K 1/10W(2012)
R5	1-216-699-11	s	RESISTOR,CHIP 100K 1/10W(2012)
R6	1-216-695-11	s	RESISTOR,CHIP 68K 1/10W(2012)
R7	1-216-675-11	s	RESISTOR CHIP 10K 1/10W(2012)
R8	1-216-691-11	s	RESISTOR CHIP 47K 1/10W(2012)
R9	1-216-651-11	s	RESISTOR,CHIP 1K 1/10W(2012)
R10	1-216-699-11	s	RESISTOR,CHIP 100K 1/10W(2012)
R11	1-216-699-11	s	RESISTOR,CHIP 100K 1/10W(2012)
R12	1-216-673-11	s	RESISTOR,CHIP 8.2K 1/10W(2012)
R14	1-216-695-11	s	RESISTOR,CHIP 68K 1/10W(2012)
R15	1-216-699-11	s	RESISTOR,CHIP 100K 1/10W(2012)
R16	1-216-699-11	s	RESISTOR,CHIP 100K 1/10W(2012)
R17	1-216-699-11	s	RESISTOR,CHIP 100K 1/10W(2012)
R18	1-216-691-11	s	RESISTOR CHIP 47K 1/10W(2012)
R19	1-216-699-11	s	RESISTOR,CHIP 100K 1/10W(2012)
R20	1-216-699-11	s	RESISTOR,CHIP 100K 1/10W(2012)
R21	1-216-691-11	s	RESISTOR CHIP 47K 1/10W(2012)
R22	1-218-760-11	s	RESISTOR,CHIP 220K 1/10W(2012)
R23	1-218-774-11	s	RESISTOR,CHIP 820K 1/10W(2012)
R24	1-216-699-11	s	RESISTOR,CHIP 100K 1/10W(2012)
R25	1-216-699-11	s	RESISTOR,CHIP 100K 1/10W(2012)
R26	1-216-691-11	s	RESISTOR CHIP 47K 1/10W(2012)
R27	1-216-699-11	s	RESISTOR,CHIP 100K 1/10W(2012)
R28	1-216-699-11	s	RESISTOR,CHIP 100K 1/10W(2012)

(RE-150 BOARD)

Ref. No. or Q'ty	Part No.	SP	Description
R29	1-216-691-11	s	RESISTOR CHIP 47K 1/10W(2012)
R30	1-216-627-11	s	RESISTOR,CHIP 100 1/10W (2012)
R31	1-216-643-11	s	RESISTOR CHIP 470 1/10W (2012)
R32	1-216-679-11	s	RESISTOR CHIP 15K 1/10W (2012)
R33	1-216-627-11	s	RESISTOR,CHIP 100 1/10W (2012)
R34	1-216-627-11	s	RESISTOR,CHIP 100 1/10W (2012)
R35	1-216-627-11	s	RESISTOR,CHIP 100 1/10W (2012)
R38	1-218-774-11	s	RESISTOR,CHIP 820K 1/10W(2012)
R39	1-216-699-11	s	RESISTOR,CHIP 100K 1/10W(2012)
R40	1-216-699-11	s	RESISTOR,CHIP 100K 1/10W(2012)
R41	1-218-770-11	s	RESISTOR,CHIP 560K 1/10W(2012)
R42	1-216-676-11	s	RESISTOR,CHIP 11K 1/10W(2012)
R43	1-216-643-11	s	RESISTOR CHIP 470 1/10W (2012)
R44	1-216-627-11	s	RESISTOR,CHIP 100 1/10W (2012)
R45	1-216-659-11	s	RESISTOR,CHIP 2.2K 1/10W(2012)
R46	1-216-659-11	s	RESISTOR,CHIP 2.2K 1/10W(2012)
R47	1-216-699-11	s	RESISTOR,CHIP 100K 1/10W(2012)
R49	1-218-760-11	s	RESISTOR,CHIP 220K 1/10W(2012)
R50	1-218-768-11	s	RESISTOR CHIP 470K 1/10W(2012)
R51	1-216-643-11	s	RESISTOR CHIP 470 1/10W (2012)
R52	1-216-643-11	s	RESISTOR CHIP 470 1/10W (2012)
R101	1-216-623-11	s	RESISTOR,CHIP 68 1/10W(2012)
R102	1-216-679-11	s	RESISTOR CHIP 15K 1/10W (2012)
R103	1-216-675-11	s	RESISTOR CHIP 10K 1/10W(2012)
R104	1-216-619-11	s	RESISTOR CHIP 47 1/10W(2012)
R105	1-216-627-11	s	RESISTOR,CHIP 100 1/10W (2012)
R106	1 216 675 11	s	RESISTOR CHIP 10K 1/10W(2012)
R107	1-216-675-11	s	RESISTOR CHIP 10K 1/10W(2012)
R108	1-216-689-11	s	RESISTOR,CHIP 39K 1/10W(2012)
R109	1-216-683-11	s	RESISTOR CHIP 22K 1/10W (2012)
R110	1-211-998-11	s	RESISTOR,METAL FILM CHIP 4.7K
R111	1-211-998-11	s	RESISTOR,METAL FILM CHIP 4.7K
R112	1-216-687-11	s	RESISTOR CHIP 33K 1/10W (2012)
R113	1-216-689-11	s	RESISTOR,CHIP 39K 1/10W(2012)
R114	1-216-667-11	s	RESISTOR,CHIP 4.7K 1/10W(2012)
R115	1-218-760-11	s	RESISTOR,CHIP 220K 1/10W(2012)
R116	1-211-999-11	s	RESISTOR,METAL FILM CHIP 9.1K
R117	1-220-751-11	s	RESISTOR,METAL FILM CHIP 2.2K
R118	1-216-639-11	s	RESISTOR,CHIP 330 1/10W (2012)
R201	1-216-623-11	s	RESISTOR,CHIP 68 1/10W(2012)
R202	1-216-689-11	s	RESISTOR,CHIP 39K 1/10W(2012)
R203	1-216-683-11	s	RESISTOR CHIP 22K 1/10W (2012)
R204	1-216-619-11	s	RESISTOR CHIP 47 1/10W(2012)
R205	1-216-627-11	s	RESISTOR,CHIP 100 1/10W (2012)
R206	1-216-675-11	s	RESISTOR CHIP 10K 1/10W(2012)
R207	1-216-675-11	s	RESISTOR CHIP 10K 1/10W(2012)
R209	1-211-998-11	s	RESISTOR,METAL FILM CHIP 4.7K
R210	1-211-998-11	s	RESISTOR,METAL FILM CHIP 4.7K
R211	1-216-687-11	s	RESISTOR CHIP 33K 1/10W (2012)
R212	1-216-689-11	s	RESISTOR,CHIP 39K 1/10W(2012)
R213	1-218-760-11	s	RESISTOR,CHIP 220K 1/10W(2012)
R214	1-216-655-11	s	RESISTOR,CHIP 1.5K 1/10W(2012)
R215	1-216-638-11	s	RESISTOR,CHIP 300 1/10W (2012)
R216	1-211-996-11	s	RESISTOR,METAL FILM CHIP 1.5K
R217	1-218-367-11	s	RESISTOR,METAL FILM CHIP 10K
R218	1-216-667-11	s	RESISTOR,CHIP 4.7K 1/10W(2012)
R301	1-216-623-11	s	RESISTOR,CHIP 68 1/10W(2012)
R302	1-216-689-11	s	RESISTOR,CHIP 39K 1/10W(2012)
R303	1-216-675-11	s	RESISTOR CHIP 10K 1/10W(2012)

(RE-150 BOARD)

Ref. No. or Q'ty	Part No.	SP	Description
R304	1-216-619-11	s	RESISTOR CHIP 47 1/10W(2012)
R305	1-216-627-11	s	RESISTOR,CHIP 100 1/10W (2012)
R306	1-216-675-11	s	RESISTOR CHIP 10K 1/10W(2012)
R307	1-216-675-11	s	RESISTOR CHIP 10K 1/10W(2012)
R308	1-216-683-11	s	RESISTOR CHIP 22K 1/10W (2012)
R309	1-216-691-11	s	RESISTOR CHIP 47K 1/10W(2012)
R310	1-211-998-11	s	RESISTOR,METAL FILM CHIP 4.7K
R311	1-211-998-11	s	RESISTOR,METAL FILM CHIP 4.7K
R313	1-216-687-11	s	RESISTOR CHIP 33K 1/10W (2012)
R314	1-216-691-11	s	RESISTOR CHIP 47K 1/10W(2012)
R315	1-216-667-11	s	RESISTOR,CHIP 4.7K 1/10W(2012)
R316	1-218-760-11	s	RESISTOR,CHIP 220K 1/10W(2012)
R317	1-211-998-11	s	RESISTOR,METAL FILM CHIP 4.7K
R318	1-211-997-11	s	RESISTOR,METAL FILM CHIP 3.0K
R319	1-216-631-11	s	RESISTOR,CHIP 150 1/10W (2012)
R351	1-216-623-11	s	RESISTOR,CHIP 68 1/10W(2012)
R352	1-216-689-11	s	RESISTOR,CHIP 39K 1/10W(2012)
R353	1-216-675-11	s	RESISTOR CHIP 10K 1/10W(2012)
R354	1-216-619-11	s	RESISTOR CHIP 47 1/10W(2012)
R355	1-216-627-11	s	RESISTOR,CHIP 100 1/10W (2012)
R356	1-216-675-11	s	RESISTOR CHIP 10K 1/10W(2012)
R357	1-216-675-11	s	RESISTOR CHIP 10K 1/10W(2012)
R358	1-216-683-11	s	RESISTOR CHIP 22K 1/10W (2012)
R359	1-216-691-11	s	RESISTOR CHIP 47K 1/10W(2012)
R360	1-211-998-11	s	RESISTOR,METAL FILM CHIP 4.7K
R361	1-211-998-11	s	RESISTOR,METAL FILM CHIP 4.7K
R362	1 216 687 11	s	RESISTOR CHIP 33K 1/10W (2012)
R363	1-216-691-11	s	RESISTOR CHIP 47K 1/10W(2012)
R364	1-218-760-11	s	RESISTOR,CHIP 220K 1/10W(2012)
R365	1-216-667-11	s	RESISTOR,CHIP 4.7K 1/10W(2012)
R366	1-219-716-11	s	RESISTOR,METAL CHIP 5.6K 1/16W
R368	1-211-997-11	s	RESISTOR,METAL FILM CHIP 3.0K
R369	1-216-639-11	s	RESISTOR,CHIP 330 1/10W (2012)
R401	1-216-623-11	s	RESISTOR,CHIP 68 1/10W(2012)
R402	1-216-689-11	s	RESISTOR,CHIP 39K 1/10W(2012)
R403	1-216-675-11	s	RESISTOR CHIP 10K 1/10W(2012)
R404	1-216-619-11	s	RESISTOR CHIP 47 1/10W(2012)
R405	1-216-627-11	s	RESISTOR,CHIP 100 1/10W (2012)
R406	1-216-675-11	s	RESISTOR CHIP 10K 1/10W(2012)
R407	1-216-675-11	s	RESISTOR CHIP 10K 1/10W(2012)
R408	1-216-675-11	s	RESISTOR CHIP 10K 1/10W(2012)
R409	1-216-699-11	s	RESISTOR,CHIP 100K 1/10W(2012)
R410	1-211-998-11	s	RESISTOR,METAL FILM CHIP 4.7K
R411	1-211-998-11	s	RESISTOR,METAL FILM CHIP 4.7K
R412	1-216-687-11	s	RESISTOR CHIP 33K 1/10W (2012)
R413	1-216-691-11	s	RESISTOR CHIP 47K 1/10W(2012)
R414	1-216-667-11	s	RESISTOR,CHIP 4.7K 1/10W(2012)
R415	1-218-760-11	s	RESISTOR,CHIP 220K 1/10W(2012)
R416	1-218-367-11	s	RESISTOR,METAL FILM CHIP 10K
R417	1-218-367-11	s	RESISTOR,METAL FILM CHIP 10K
R418	1-216-651-11	s	RESISTOR,CHIP 1K 1/10W(2012)
R501	1-216-623-11	s	RESISTOR,CHIP 68 1/10W(2012)
R502	1-216-679-11	s	RESISTOR CHIP 15K 1/10W (2012)
R503	1-216-675-11	s	RESISTOR CHIP 10K 1/10W(2012)
R504	1-216-619-11	s	RESISTOR CHIP 47 1/10W(2012)
R505	1-216-627-11	s	RESISTOR,CHIP 100 1/10W (2012)
R506	1-216-675-11	s	RESISTOR CHIP 10K 1/10W(2012)
R507	1-216-675-11	s	RESISTOR CHIP 10K 1/10W(2012)
R508	1-216-689-11	s	RESISTOR,CHIP 39K 1/10W(2012)

(RE-150 BOARD)

Ref. No. or Q'ty	Part No.	SP	Description
R509	1-216-687-11	s	RESISTOR CHIP 33K 1/10W (2012)
R511	1-211-998-11	s	RESISTOR,METAL FILM CHIP 4.7K
R512	1-211-998-11	s	RESISTOR,METAL FILM CHIP 4.7K
R513	1-216-687-11	s	RESISTOR CHIP 33K 1/10W (2012)
R514	1-216-689-11	s	RESISTOR,CHIP 39K 1/10W(2012)
R515	1-216-675-11	s	RESISTOR CHIP 10K 1/10W(2012)
R516	1-218-760-11	s	RESISTOR,CHIP 220K 1/10W(2012)
R517	1-218-367-11	s	RESISTOR,METAL FILM CHIP 10K
R518	1-216-641-11	s	RESISTOR,CHIP 390 1/10W(2012)
R519	1-211-997-11	s	RESISTOR,METAL FILM CHIP 3.0K
R551	1-216-623-11	s	RESISTOR,CHIP 68 1/10W(2012)
R552	1-216-679-11	s	RESISTOR CHIP 15K 1/10W (2012)
R553	1-216-675-11	s	RESISTOR CHIP 10K 1/10W(2012)
R554	1-216-619-11	s	RESISTOR CHIP 47 1/10W(2012)
R555	1-216-627-11	s	RESISTOR,CHIP 100 1/10W (2012)
R556	1-216-675-11	s	RESISTOR CHIP 10K 1/10W(2012)
R557	1-216-675-11	s	RESISTOR CHIP 10K 1/10W(2012)
R558	1-216-689-11	s	RESISTOR,CHIP 39K 1/10W(2012)
R559	1-216-687-11	s	RESISTOR CHIP 33K 1/10W (2012)
R560	1-211-998-11	s	RESISTOR,METAL FILM CHIP 4.7K
R561	1-211-998-11	s	RESISTOR,METAL FILM CHIP 4.7K
R562	1-216-687-11	s	RESISTOR CHIP 33K 1/10W (2012)
R563	1-216-689-11	s	RESISTOR,CHIP 39K 1/10W(2012)
R564	1-216-675-11	s	RESISTOR CHIP 10K 1/10W(2012)
R565	1-218-760-11	s	RESISTOR,CHIP 220K 1/10W(2012)
R566	1-218-367-11	s	RESISTOR,METAL FILM CHIP 10K
R567	1 211 997 11	s	RESISTOR,METAL FILM CHIP 3.0K
R568	1-216-641-11	s	RESISTOR,CHIP 390 1/10W(2012)
R601	1-216-623-11	s	RESISTOR,CHIP 68 1/10W(2012)
R602	1-216-689-11	s	RESISTOR,CHIP 39K 1/10W(2012)
R603	1-216-683-11	s	RESISTOR CHIP 22K 1/10W (2012)
R604	1-216-619-11	s	RESISTOR CHIP 47 1/10W(2012)
R605	1-216-627-11	s	RESISTOR,CHIP 100 1/10W (2012)
R606	1-216-675-11	s	RESISTOR CHIP 10K 1/10W(2012)
R607	1-216-675-11	s	RESISTOR CHIP 10K 1/10W(2012)
R608	1-211-998-11	s	RESISTOR,METAL FILM CHIP 4.7K
R609	1-211-998-11	s	RESISTOR,METAL FILM CHIP 4.7K
R610	1-216-687-11	s	RESISTOR CHIP 33K 1/10W (2012)
R611	1-216-689-11	s	RESISTOR,CHIP 39K 1/10W(2012)
R612	1-216-655-11	s	RESISTOR,CHIP 1.5K 1/10W(2012)
R613	1-218-760-11	s	RESISTOR,CHIP 220K 1/10W(2012)
R614	1-216-635-11	s	RESISTOR CHIP 220 1/10W (2012)
R615	1-211-998-11	s	RESISTOR,METAL FILM CHIP 4.7K
R616	1-219-218-11	s	RESISTOR,METAL FILM CHIP 24K
R617	1-216-667-11	s	RESISTOR,CHIP 4.7K 1/10W(2012)
R701	1-216-675-11	s	RESISTOR CHIP 10K 1/10W(2012)
R702	1-216-675-11	s	RESISTOR CHIP 10K 1/10W(2012)
R703	1-216-663-11	s	RESISTOR,CHIP 3.3K 1/10W(2012)
R704	1-216-675-11	s	RESISTOR CHIP 10K 1/10W(2012)
R705	1-216-675-11	s	RESISTOR CHIP 10K 1/10W(2012)
R706	1-216-603-11	s	RESISTOR,CHIP 10 1/10W(2012)
R707	1-216-603-11	s	RESISTOR,CHIP 10 1/10W(2012)
R708	1-216-667-11	s	RESISTOR,CHIP 4.7K 1/10W(2012)
R709	1-216-699-11	s	RESISTOR,CHIP 100K 1/10W(2012)
R710	1-216-667-11	s	RESISTOR,CHIP 4.7K 1/10W(2012)
R711	1-216-667-11	s	RESISTOR,CHIP 4.7K 1/10W(2012)
R712	1-216-687-11	s	RESISTOR CHIP 33K 1/10W (2012)
R713	1-216-691-11	s	RESISTOR CHIP 47K 1/10W(2012)
R714	1-216-667-11	s	RESISTOR,CHIP 4.7K 1/10W(2012)

(RE-150 BOARD)

Ref. No. or Q'ty	Part No.	SP	Description
R715	1-218-760-11	s	RESISTOR,CHIP 220K 1/10W(2012)
R716	1-216-675-11	s	RESISTOR CHIP 10K 1/10W(2012)
R717	1-216-699-11	s	RESISTOR,CHIP 100K 1/10W(2012)
R718	1-216-662-11	s	RESISTOR,CHIP 3K 1/10W (2012)
R801	1-216-691-11	s	RESISTOR CHIP 47K 1/10W(2012)
R802	1-216-683-11	s	RESISTOR CHIP 22K 1/10W (2012)
R803	1-216-683-11	s	RESISTOR CHIP 22K 1/10W (2012)
R804	1-216-691-11	s	RESISTOR CHIP 47K 1/10W(2012)
R805	1-216-683-11	s	RESISTOR CHIP 22K 1/10W (2012)
R806	1-216-683-11	s	RESISTOR CHIP 22K 1/10W (2012)
R807	1-216-691-11	s	RESISTOR CHIP 47K 1/10W(2012)
R808	1-216-603-11	s	RESISTOR,CHIP 10 1/10W(2012)
R809	1-218-768-11	s	RESISTOR CHIP 470K 1/10W(2012)
R810	1-216-686-11	s	RESISTOR,METAL FILM 30K 1/10W
R900	1-216-691-11	s	RESISTOR CHIP 47K 1/10W(2012)
R901	1-216-699-11	s	RESISTOR,CHIP 100K 1/10W(2012)
R902	1-216-686-11	s	RESISTOR,METAL FILM 30K 1/10W
R903	1-216-674-11	s	RESISTOR,CHIP 9.1K 1/10W(2012)
R904	1-216-696-11	s	RESISTOR,CHIP 75K 1/10W(2012)
R905	1-216-677-11	s	RESISTOR,CHIP 12K 1/10W(2012)
R906	1-216-655-11	s	RESISTOR,CHIP 1.5K 1/10W(2012)
R907	1-216-686-11	s	RESISTOR,METAL FILM 30K 1/10W
R908	1-216-691-11	s	RESISTOR CHIP 47K 1/10W(2012)
R909	1-216-691-11	s	RESISTOR CHIP 47K 1/10W(2012)
R910	1-216-675-11	s	RESISTOR CHIP 10K 1/10W(2012)
R911	1-216-699-11	s	RESISTOR,CHIP 100K 1/10W(2012)
R912	1 218 760 11	s	RESISTOR,CHIP 220K 1/10W(2012)
R913	1-216-687-11	s	RESISTOR CHIP 33K 1/10W (2012)
R914	1-216-699-11	s	RESISTOR,CHIP 100K 1/10W(2012)
R917	1-216-699-11	s	RESISTOR,CHIP 100K 1/10W(2012)
R923	1-216-651-11	s	RESISTOR,CHIP 1K 1/10W(2012)
R924	1-216-651-11	s	RESISTOR,CHIP 1K 1/10W(2012)
R930	1-216-691-11	s	RESISTOR CHIP 47K 1/10W(2012)
R931	1-216-699-11	s	RESISTOR,CHIP 100K 1/10W(2012)

RE-158 BOARD

Ref. No. or Q'ty	Part No.	SP	Description
1pc	1-667-541-11	o	PRINTED WIRING BOARD, RE-158
CB1	⚠ 1-533-647-11	s	BREAKER
CN1	1-566-095-11	s	PIN,BOARD TO BOARD 11P

SDI-23 BOARD

Ref. No. or Q'ty	Part No.	SP	Description
1pc	A-8316-672-A	s	MOUNTED CIRCUIT BOARD, SDI-23
2pcs	3-603-737-01	o	LEVER,BOARD
5pcs	3-729-061-01	s	SCREW (M2X4.5) (TYPE 1)(STEEL)
C1	1-115-169-11	s	CAPACITOR,TANTAL (SMD) 10MF
C2	1-115-169-11	s	CAPACITOR,TANTAL (SMD) 10MF
C3	1-115-169-11	s	CAPACITOR,TANTAL (SMD) 10MF
C4	1-117-373-11	s	CAPACITOR, (SMD) 150MF/6.3V
C5	1-117-373-11	s	CAPACITOR, (SMD) 150MF/6.3V
C6	1-117-373-11	s	CAPACITOR, (SMD) 150MF/6.3V
C100	1-107-826-11	s	CAPACITOR,CHIP CERAMIC 0.1MF
C101	1-115-169-11	s	CAPACITOR,TANTAL (SMD) 10MF
C102	1-115-169-11	s	CAPACITOR,TANTAL (SMD) 10MF
C103	1-107-826-11	s	CAPACITOR,CHIP CERAMIC 0.1MF
C104	1-107-826-11	s	CAPACITOR,CHIP CERAMIC 0.1MF
C105	1-117-232-11	s	CAPACITOR, (SMD) 22MF/4V
C106	1-107-826-11	s	CAPACITOR,CHIP CERAMIC 0.1MF
C107	1-107-826-11	s	CAPACITOR,CHIP CERAMIC 0.1MF
C108	1-107-826-11	s	CAPACITOR,CHIP CERAMIC 0.1MF
C109	1-107-826-11	s	CAPACITOR,CHIP CERAMIC 0.1MF
C110	1-117-232-11	s	CAPACITOR, (SMD) 22MF/4V
C111	1-107-826-11	s	CAPACITOR,CHIP CERAMIC 0.1MF
C112	1-107-682-11	s	CAPACITOR,CHIP 1MF/16V (3216)
C113	1-107-826-11	s	CAPACITOR,CHIP CERAMIC 0.1MF
C114	1-107-826-11	s	CAPACITOR,CHIP CERAMIC 0.1MF
C115	1-107-826-11	s	CAPACITOR,CHIP CERAMIC 0.1MF
C116	1-107-826-11	s	CAPACITOR,CHIP CERAMIC 0.1MF
C117	1 117 232 11	s	CAPACITOR, (SMD) 22MF/4V
C118	1-107-826-11	s	CAPACITOR,CHIP CERAMIC 0.1MF
C119	1-107-826-11	s	CAPACITOR,CHIP CERAMIC 0.1MF
C120	1-107-826-11	s	CAPACITOR,CHIP CERAMIC 0.1MF
C121	1-162-923-11	s	CAPACITOR,CERAMIC 47PF/50V CH
C122	1-107-826-11	s	CAPACITOR,CHIP CERAMIC 0.1MF
C123	1-107-826-11	s	CAPACITOR,CHIP CERAMIC 0.1MF
C124	1-107-682-11	s	CAPACITOR,CHIP 1MF/16V (3216)
C125	1-107-826-11	s	CAPACITOR,CHIP CERAMIC 0.1MF
C126	1-107-826-11	s	CAPACITOR,CHIP CERAMIC 0.1MF
C127	1-107-826-11	s	CAPACITOR,CHIP CERAMIC 0.1MF
C128	1-162-915-11	s	CAPACITOR,CERAMIC 10PF/50V CH
C130	1-107-826-11	s	CAPACITOR,CHIP CERAMIC 0.1MF
C131	1-115-169-11	s	CAPACITOR,TANTAL (SMD) 10MF
C132	1-107-826-11	s	CAPACITOR,CHIP CERAMIC 0.1MF
C133	1-107-826-11	s	CAPACITOR,CHIP CERAMIC 0.1MF
C134	1-107-826-11	s	CAPACITOR,CHIP CERAMIC 0.1MF
C135	1-107-826-11	s	CAPACITOR,CHIP CERAMIC 0.1MF
C136	1-107-826-11	s	CAPACITOR,CHIP CERAMIC 0.1MF
C137	1-115-169-11	s	CAPACITOR,TANTAL (SMD) 10MF
C138	1-107-826-11	s	CAPACITOR,CHIP CERAMIC 0.1MF
C139	1-107-826-11	s	CAPACITOR,CHIP CERAMIC 0.1MF
C140	1-162-907-11	s	CAPACITOR,CERAMIC 2PF/50V(CK)
C141	1-115-169-11	s	CAPACITOR,TANTAL (SMD) 10MF
C142	1-107-826-11	s	CAPACITOR,CHIP CERAMIC 0.1MF
C143	1-107-826-11	s	CAPACITOR,CHIP CERAMIC 0.1MF
C144	1-107-826-11	s	CAPACITOR,CHIP CERAMIC 0.1MF
C145	1-115-169-11	s	CAPACITOR,TANTAL (SMD) 10MF
C146	1-107-826-11	s	CAPACITOR,CHIP CERAMIC 0.1MF
C147	1-107-826-11	s	CAPACITOR,CHIP CERAMIC 0.1MF
C200	1-107-826-11	s	CAPACITOR,CHIP CERAMIC 0.1MF
C201	1-107-826-11	s	CAPACITOR,CHIP CERAMIC 0.1MF

(SDI-23 BOARD)

Ref. No. or Q'ty	Part No.	SP	Description
C202	1-107-826-11	s	CAPACITOR,CHIP CERAMIC 0.1MF
C203	1-107-826-11	s	CAPACITOR,CHIP CERAMIC 0.1MF
C204	1-107-826-11	s	CAPACITOR,CHIP CERAMIC 0.1MF
C205	1-107-826-11	s	CAPACITOR,CHIP CERAMIC 0.1MF
C206	1-107-826-11	s	CAPACITOR,CHIP CERAMIC 0.1MF
C207	1-164-230-11	s	CAPACITOR,CERAMIC 220PF/50V
C208	1-115-467-11	s	CAPACITOR CERAMIC 0.22MF/10V B
C209	1-135-179-21	s	CAPACITOR,TANTALUM 2.2MF/16V
C210	1-115-467-11	s	CAPACITOR CERAMIC 0.22MF/10V B
C211	1-107-826-11	s	CAPACITOR,CHIP CERAMIC 0.1MF
C212	1-107-826-11	s	CAPACITOR,CHIP CERAMIC 0.1MF
C213	1-107-826-11	s	CAPACITOR,CHIP CERAMIC 0.1MF
C214	1-107-826-11	s	CAPACITOR,CHIP CERAMIC 0.1MF
C215	1-107-826-11	s	CAPACITOR,CHIP CERAMIC 0.1MF
C216	1-107-826-11	s	CAPACITOR,CHIP CERAMIC 0.1MF
C217	1-107-826-11	s	CAPACITOR,CHIP CERAMIC 0.1MF
C218	1-107-826-11	s	CAPACITOR,CHIP CERAMIC 0.1MF
C219	1-107-826-11	s	CAPACITOR,CHIP CERAMIC 0.1MF
C250	1-107-826-11	s	CAPACITOR,CHIP CERAMIC 0.1MF
C251	1-107-826-11	s	CAPACITOR,CHIP CERAMIC 0.1MF
C252	1-107-826-11	s	CAPACITOR,CHIP CERAMIC 0.1MF
C253	1-107-826-11	s	CAPACITOR,CHIP CERAMIC 0.1MF
C254	1-107-826-11	s	CAPACITOR,CHIP CERAMIC 0.1MF
C255	1-107-826-11	s	CAPACITOR,CHIP CERAMIC 0.1MF
C256	1-107-826-11	s	CAPACITOR,CHIP CERAMIC 0.1MF
C257	1-107-826-11	s	CAPACITOR,CHIP CERAMIC 0.1MF
C258	1 107 826 11	s	CAPACITOR,CHIP CERAMIC 0.1MF
C259	1-107-826-11	s	CAPACITOR,CHIP CERAMIC 0.1MF
C260	1-107-826-11	s	CAPACITOR,CHIP CERAMIC 0.1MF
C261	1-107-826-11	s	CAPACITOR,CHIP CERAMIC 0.1MF
C262	1-107-826-11	s	CAPACITOR,CHIP CERAMIC 0.1MF
C263	1-107-826-11	s	CAPACITOR,CHIP CERAMIC 0.1MF
C264	1-107-826-11	s	CAPACITOR,CHIP CERAMIC 0.1MF
C300	1-107-826-11	s	CAPACITOR,CHIP CERAMIC 0.1MF
C301	1-107-826-11	s	CAPACITOR,CHIP CERAMIC 0.1MF
C302	1-107-826-11	s	CAPACITOR,CHIP CERAMIC 0.1MF
C303	1-107-826-11	s	CAPACITOR,CHIP CERAMIC 0.1MF
C304	1-107-826-11	s	CAPACITOR,CHIP CERAMIC 0.1MF
C305	1-107-826-11	s	CAPACITOR,CHIP CERAMIC 0.1MF
C306	1-107-826-11	s	CAPACITOR,CHIP CERAMIC 0.1MF
C307	1-107-826-11	s	CAPACITOR,CHIP CERAMIC 0.1MF
C308	1-107-826-11	s	CAPACITOR,CHIP CERAMIC 0.1MF
C350	1-107-826-11	s	CAPACITOR,CHIP CERAMIC 0.1MF
C351	1-107-826-11	s	CAPACITOR,CHIP CERAMIC 0.1MF
C352	1-107-826-11	s	CAPACITOR,CHIP CERAMIC 0.1MF
C353	1-107-826-11	s	CAPACITOR,CHIP CERAMIC 0.1MF
C354	1-107-826-11	s	CAPACITOR,CHIP CERAMIC 0.1MF
C355	1-107-826-11	s	CAPACITOR,CHIP CERAMIC 0.1MF
C356	1-107-826-11	s	CAPACITOR,CHIP CERAMIC 0.1MF
C357	1-107-826-11	s	CAPACITOR,CHIP CERAMIC 0.1MF
C358	1-107-826-11	s	CAPACITOR,CHIP CERAMIC 0.1MF
C359	1-107-826-11	s	CAPACITOR,CHIP CERAMIC 0.1MF
C360	1-107-826-11	s	CAPACITOR,CHIP CERAMIC 0.1MF
C361	1-107-826-11	s	CAPACITOR,CHIP CERAMIC 0.1MF
C362	1-107-826-11	s	CAPACITOR,CHIP CERAMIC 0.1MF
C363	1-107-826-11	s	CAPACITOR,CHIP CERAMIC 0.1MF
C364	1-107-826-11	s	CAPACITOR,CHIP CERAMIC 0.1MF
C365	1-107-826-11	s	CAPACITOR,CHIP CERAMIC 0.1MF
C400	1-107-826-11	s	CAPACITOR,CHIP CERAMIC 0.1MF

(SDI-23 BOARD)

Ref. No. or Q'ty	Part No.	SP	Description
C401	1-107-826-11	s	CAPACITOR,CHIP CERAMIC 0.1MF
C407	1-107-826-11	s	CAPACITOR,CHIP CERAMIC 0.1MF
C408	1-107-826-11	s	CAPACITOR,CHIP CERAMIC 0.1MF
C409	1-107-826-11	s	CAPACITOR,CHIP CERAMIC 0.1MF
C410	1-107-826-11	s	CAPACITOR,CHIP CERAMIC 0.1MF
C411	1-107-826-11	s	CAPACITOR,CHIP CERAMIC 0.1MF
C412	1-107-826-11	s	CAPACITOR,CHIP CERAMIC 0.1MF
C450	1-162-927-11	s	CAPACITOR,CERAMIC 100PF/50V CH
C451	1-115-169-11	s	CAPACITOR,TANTAL (SMD) 10MF
C452	1-107-826-11	s	CAPACITOR,CHIP CERAMIC 0.1MF
C453	1-107-826-11	s	CAPACITOR,CHIP CERAMIC 0.1MF
C454	1-115-169-11	s	CAPACITOR,TANTAL (SMD) 10MF
C455	1-107-826-11	s	CAPACITOR,CHIP CERAMIC 0.1MF
C456	1-107-826-11	s	CAPACITOR,CHIP CERAMIC 0.1MF
C457	1-107-826-11	s	CAPACITOR,CHIP CERAMIC 0.1MF
C458	1-107-826-11	s	CAPACITOR,CHIP CERAMIC 0.1MF
C459	1-107-826-11	s	CAPACITOR,CHIP CERAMIC 0.1MF
C460	1-115-169-11	s	CAPACITOR,TANTAL (SMD) 10MF
C461	1-107-826-11	s	CAPACITOR,CHIP CERAMIC 0.1MF
C462	1-107-826-11	s	CAPACITOR,CHIP CERAMIC 0.1MF
C463	1-107-826-11	s	CAPACITOR,CHIP CERAMIC 0.1MF
C464	1-107-826-11	s	CAPACITOR,CHIP CERAMIC 0.1MF
C465	1-107-826-11	s	CAPACITOR,CHIP CERAMIC 0.1MF
C466	1-107-826-11	s	CAPACITOR,CHIP CERAMIC 0.1MF
C467	1-107-826-11	s	CAPACITOR,CHIP CERAMIC 0.1MF
C468	1-107-826-11	s	CAPACITOR,CHIP CERAMIC 0.1MF
C469	1 115 416 11	s	CAPACITOR,CERAMIC 1000PF/25V
C500	1-107-826-11	s	CAPACITOR,CHIP CERAMIC 0.1MF
C501	1-107-826-11	s	CAPACITOR,CHIP CERAMIC 0.1MF
C502	1-107-826-11	s	CAPACITOR,CHIP CERAMIC 0.1MF
C503	1-107-826-11	s	CAPACITOR,CHIP CERAMIC 0.1MF
C504	1-107-826-11	s	CAPACITOR,CHIP CERAMIC 0.1MF
C505	1-107-826-11	s	CAPACITOR,CHIP CERAMIC 0.1MF
C506	1-107-826-11	s	CAPACITOR,CHIP CERAMIC 0.1MF
C507	1-107-826-11	s	CAPACITOR,CHIP CERAMIC 0.1MF
C508	1-107-826-11	s	CAPACITOR,CHIP CERAMIC 0.1MF
C509	1-107-826-11	s	CAPACITOR,CHIP CERAMIC 0.1MF
C550	1-107-826-11	s	CAPACITOR,CHIP CERAMIC 0.1MF
C551	1-107-826-11	s	CAPACITOR,CHIP CERAMIC 0.1MF
C552	1-107-826-11	s	CAPACITOR,CHIP CERAMIC 0.1MF
C553	1-107-826-11	s	CAPACITOR,CHIP CERAMIC 0.1MF
C554	1-107-826-11	s	CAPACITOR,CHIP CERAMIC 0.1MF
C555	1-107-826-11	s	CAPACITOR,CHIP CERAMIC 0.1MF
C556	1-107-826-11	s	CAPACITOR,CHIP CERAMIC 0.1MF
C557	1-107-826-11	s	CAPACITOR,CHIP CERAMIC 0.1MF
C558	1-107-826-11	s	CAPACITOR,CHIP CERAMIC 0.1MF
C559	1-107-826-11	s	CAPACITOR,CHIP CERAMIC 0.1MF
C560	1-107-826-11	s	CAPACITOR,CHIP CERAMIC 0.1MF
C600	1-107-826-11	s	CAPACITOR,CHIP CERAMIC 0.1MF
C601	1-107-826-11	s	CAPACITOR,CHIP CERAMIC 0.1MF
C602	1-107-826-11	s	CAPACITOR,CHIP CERAMIC 0.1MF
C603	1-107-826-11	s	CAPACITOR,CHIP CERAMIC 0.1MF
C604	1-107-826-11	s	CAPACITOR,CHIP CERAMIC 0.1MF
C605	1-107-826-11	s	CAPACITOR,CHIP CERAMIC 0.1MF
C606	1-107-826-11	s	CAPACITOR,CHIP CERAMIC 0.1MF
C607	1-107-826-11	s	CAPACITOR,CHIP CERAMIC 0.1MF
C700	1-107-826-11	s	CAPACITOR,CHIP CERAMIC 0.1MF
C701	1-115-169-11	s	CAPACITOR,TANTAL (SMD) 10MF
C702	1-115-169-11	s	CAPACITOR,TANTAL (SMD) 10MF

(SDI-23 BOARD)

Ref. No. or Q'ty	Part No.	SP	Description
C703	1-107-826-11	s	CAPACITOR,CHIP CERAMIC 0.1MF
C704	1-107-826-11	s	CAPACITOR,CHIP CERAMIC 0.1MF
C705	1-117-232-11	s	CAPACITOR, (SMD) 22MF/4V
C706	1-107-826-11	s	CAPACITOR,CHIP CERAMIC 0.1MF
C707	1-107-826-11	s	CAPACITOR,CHIP CERAMIC 0.1MF
C708	1-107-826-11	s	CAPACITOR,CHIP CERAMIC 0.1MF
C709	1-107-826-11	s	CAPACITOR,CHIP CERAMIC 0.1MF
C710	1-107-826-11	s	CAPACITOR,CHIP CERAMIC 0.1MF
C711	1-115-169-11	s	CAPACITOR,TANTAL (SMD) 10MF
C712	1-115-169-11	s	CAPACITOR,TANTAL (SMD) 10MF
C713	1-107-826-11	s	CAPACITOR,CHIP CERAMIC 0.1MF
C714	1-107-826-11	s	CAPACITOR,CHIP CERAMIC 0.1MF
C715	1-107-826-11	s	CAPACITOR,CHIP CERAMIC 0.1MF
C716	1-107-826-11	s	CAPACITOR,CHIP CERAMIC 0.1MF
C717	1-107-826-11	s	CAPACITOR,CHIP CERAMIC 0.1MF
C718	1-107-826-11	s	CAPACITOR,CHIP CERAMIC 0.1MF
C719	1-107-826-11	s	CAPACITOR,CHIP CERAMIC 0.1MF
C720	1-107-826-11	s	CAPACITOR,CHIP CERAMIC 0.1MF
C721	1-107-826-11	s	CAPACITOR,CHIP CERAMIC 0.1MF
C722	1-107-826-11	s	CAPACITOR,CHIP CERAMIC 0.1MF
C723	1-107-826-11	s	CAPACITOR,CHIP CERAMIC 0.1MF
C724	1-107-826-11	s	CAPACITOR,CHIP CERAMIC 0.1MF
C725	1-162-915-11	s	CAPACITOR,CERAMIC 10PF/50V CH
C726	1-107-826-11	s	CAPACITOR,CHIP CERAMIC 0.1MF
C727	1-107-826-11	s	CAPACITOR,CHIP CERAMIC 0.1MF
C728	1-107-826-11	s	CAPACITOR,CHIP CERAMIC 0.1MF
C729	1 162 911 11	s	CAPACITOR,CERAMIC 6PF/50V 1608
C730	1-107-826-11	s	CAPACITOR,CHIP CERAMIC 0.1MF
C731	1-107-826-11	s	CAPACITOR,CHIP CERAMIC 0.1MF
C732	1-107-826-11	s	CAPACITOR,CHIP CERAMIC 0.1MF
C733	1-107-826-11	s	CAPACITOR,CHIP CERAMIC 0.1MF
C734	1-107-826-11	s	CAPACITOR,CHIP CERAMIC 0.1MF
C735	1-107-826-11	s	CAPACITOR,CHIP CERAMIC 0.1MF
C736	1-107-826-11	s	CAPACITOR,CHIP CERAMIC 0.1MF
C737	1-107-826-11	s	CAPACITOR,CHIP CERAMIC 0.1MF
C738	1-107-826-11	s	CAPACITOR,CHIP CERAMIC 0.1MF
C739	1-107-826-11	s	CAPACITOR,CHIP CERAMIC 0.1MF
C740	1-107-826-11	s	CAPACITOR,CHIP CERAMIC 0.1MF
C741	1-107-826-11	s	CAPACITOR,CHIP CERAMIC 0.1MF
C742	1-115-169-11	s	CAPACITOR,TANTAL (SMD) 10MF
C743	1-107-826-11	s	CAPACITOR,CHIP CERAMIC 0.1MF
C744	1-107-826-11	s	CAPACITOR,CHIP CERAMIC 0.1MF
C745	1-162-907-11	s	CAPACITOR,CERAMIC 2PF/50V(CK)
C746	1-162-907-11	s	CAPACITOR,CERAMIC 2PF/50V(CK)
C747	1-107-826-11	s	CAPACITOR,CHIP CERAMIC 0.1MF
C748	1-117-373-11	s	CAPACITOR, (SMD) 150MF/6.3V
C749	1-107-826-11	s	CAPACITOR,CHIP CERAMIC 0.1MF
C800	1-107-826-11	s	CAPACITOR,CHIP CERAMIC 0.1MF
C801	1-107-826-11	s	CAPACITOR,CHIP CERAMIC 0.1MF
C802	1-107-826-11	s	CAPACITOR,CHIP CERAMIC 0.1MF
C803	1-107-826-11	s	CAPACITOR,CHIP CERAMIC 0.1MF
C804	1-107-826-11	s	CAPACITOR,CHIP CERAMIC 0.1MF
C805	1-107-826-11	s	CAPACITOR,CHIP CERAMIC 0.1MF
C806	1-107-826-11	s	CAPACITOR,CHIP CERAMIC 0.1MF
C807	1-107-826-11	s	CAPACITOR,CHIP CERAMIC 0.1MF
C808	1-107-826-11	s	CAPACITOR,CHIP CERAMIC 0.1MF
C809	1-107-826-11	s	CAPACITOR,CHIP CERAMIC 0.1MF
C810	1-107-826-11	s	CAPACITOR,CHIP CERAMIC 0.1MF
C811	1-107-826-11	s	CAPACITOR,CHIP CERAMIC 0.1MF

(SDI-23 BOARD)

Ref. No. or Q'ty	Part No.	SP	Description
C812	1-107-826-11	s	CAPACITOR,CHIP CERAMIC 0.1MF
C813	1-107-826-11	s	CAPACITOR,CHIP CERAMIC 0.1MF
CN62	1-695-453-11	s	CONNECTOR,BOARD TO BOARD 50P
CN100	1-764-243-11	o	CONNECTOR (COAXIAL)
CN101	1-764-243-11	o	CONNECTOR (COAXIAL)
CN700	1-764-243-11	o	CONNECTOR (COAXIAL)
CN701	1-764-243-11	o	CONNECTOR (COAXIAL)
D200	8-719-941-04	s	DIODE SB007-03CP
D201	8-719-941-04	s	DIODE SB007-03CP
D300	8-719-987-43	s	LED CL-150PG-CD
D301	8-719-987-43	s	LED CL-150PG-CD
D302	8-719-059-73	s	LED CL-150HR-CD-T
D303	8-719-059-73	s	LED CL-150HR-CD-T
D304	8-719-059-73	s	LED CL-150HR-CD-T
D305	8-719-059-73	s	LED CL-150HR-CD-T
D450	8-719-941-23	s	DIODE DA204U
D451	8-719-941-04	s	DIODE SB007-03CP
D452	8-719-941-04	s	DIODE SB007-03CP
D453	8-719-941-04	s	DIODE SB007-03CP
D800	8-719-987-43	s	LED CL-150PG-CD
D801	8-719-987-43	s	LED CL-150PG-CD
FB101	1-543-644-11	s	BEAD, FERRITE (CHIP)
FB102	1-543-644-11	s	BEAD, FERRITE (CHIP)
FB104	1-543-644-11	s	BEAD, FERRITE (CHIP)
FB105	1-543-644-11	s	BEAD, FERRITE (CHIP)
FB106	1-543-644-11	s	BEAD, FERRITE (CHIP)
FB107	1-543-644-11	s	BEAD, FERRITE (CHIP)
FB108	1-543-644-11	s	BEAD, FERRITE (CHIP)
FB450	1-543-644-11	s	BEAD, FERRITE (CHIP)
FB451	1-543-644-11	s	BEAD, FERRITE (CHIP)
FB700	1-543-644-11	s	BEAD, FERRITE (CHIP)
FB702	1-543-644-11	s	BEAD, FERRITE (CHIP)
FB703	1-543-644-11	s	BEAD, FERRITE (CHIP)
FB704	1-543-644-11	s	BEAD, FERRITE (CHIP)
FB705	1-543-644-11	s	BEAD, FERRITE (CHIP)
FB706	1-543-644-11	s	BEAD, FERRITE (CHIP)
FB707	1-543-644-11	s	BEAD, FERRITE (CHIP)
IC100	8-759-058-43	s	IC NJM3404AV
IC101	8-759-710-88	s	IC NJM431U
IC102	8-752-078-34	s	IC CXB1342R
IC103	8-759-490-41	s	IC TC74VHCT541AFT(EL)
IC104	8-759-490-41	s	IC TC74VHCT541AFT(EL)
IC200	8-759-523-78	s	IC TC74VHC00FT(EL)
IC201	8-759-082-57	s	IC TC7W04FU
IC202	8-759-524-04	s	IC TC74VHC125FT (EL)
IC203	8-759-523-94	s	IC TC74VHC32FT(EL)
IC204	8-759-523-95	s	IC TC74VHC74FT(EL)
IC205	8-759-172-72	s	IC CXD8386AQ
IC206	8-759-392-01	s	IC TC7SH86FU (TE85R)
IC207	8-759-271-86	s	IC TC7SH04FU
IC208	8-759-523-84	s	IC TC74VHC14FT (EL)
IC209	8-759-447-77	s	IC TC7WH74FU (TR12R)
IC210	8-759-524-50	s	IC TC74VHC541FT(EL)
IC211	8-759-524-50	s	IC TC74VHC541FT(EL)
IC212	8-759-524-50	s	IC TC74VHC541FT(EL)
IC250	8-759-289-69	s	IC CXD8280AQ
IC252	8-759-523-97	s	IC TC74VHC123AFT(EL)

(SDI-23 BOARD)

Ref. No. or Q'ty	Part No.	SP	Description	
IC253	8-759-524-50	s	IC TC74VHC541FT(EL)	
IC254	8-759-524-50	s	IC TC74VHC541FT(EL)	
IC255	8-759-523-81	s	IC TC74VHC08FT(EL)	
IC256	8-759-523-97	s	IC TC74VHC123AFT(EL)	
IC300	8-759-491-46	s	IC TC74VHCT04AFT (EL)	
IC301	8-759-344-84	s	IC CXD8953Q	
IC302	8-759-524-22	s	IC TC74VHC175FT(EL)	
IC303	8-759-082-57	s	IC TC7W04FU	
IC304	8-759-082-57	s	IC TC7W04FU	
IC350	8-759-524-50	s	IC TC74VHC541FT(EL)	
IC351	8-759-524-50	s	IC TC74VHC541FT(EL)	
IC352	8-759-175-79	s	IC CXD8818R	
IC353	8-759-477-86	s	IC UPD485506G5-25-7JF	(E2)
IC354	8-759-477-86	s	IC UPD485506G5-25-7JF	(E2)
IC356	8-759-524-50	s	IC TC74VHC541FT(EL)	
IC400	8-752-360-90	s	IC CXD303-101Q	
IC406	8-759-175-57	s	IC CXD8820AR	
IC407	8-759-524-52	s	IC TC74VHC574FT(EL)	
IC408	8-759-524-52	s	IC TC74VHC574FT(EL)	
IC450	8-759-387-54	s	IC S-80727-SN-DQ-T1	
IC451	8-759-391-30	s	IC 74LVX3245QSCX	
IC452	8-759-277-63	s	IC TC7W14FU (TE12R)	
IC453	8-759-082-58	s	IC TC7W08FU	
IC454	8-759-082-57	s	IC TC7W04FU	
IC455	8-759-582-53	s	IC UPD78014FGC-632-AB8	
IC456	8-759-524-50	s	IC TC74VHC541FT(EL)	
IC457	8 759 430 21	s	IC MSM6524GS KR1	
IC500	8-759-524-27	s	IC TC74VHC244FT(EL)	
IC501	8-759-391-30	s	IC 74LVX3245QSCX	
IC502	8-759-524-50	s	IC TC74VHC541FT(EL)	
IC503	8-759-519-12	s	IC CXD8281Q	
IC550	8-759-472-67	s	IC 74VHCT574MTCX	
IC551	8-759-472-67	s	IC 74VHCT574MTCX	
IC552	8-759-172-73	s	IC CXD8385Q	
IC553	8-759-447-77	s	IC TC7WH74FU (TR12R)	
IC554	8-759-082-57	s	IC TC7W04FU	
IC555	8-759-524-18	s	IC TC74VHC163FT(EL)	
IC556	8-759-524-18	s	IC TC74VHC163FT(EL)	
IC557	8-759-082-59	s	IC TC7W32FU	
IC600	8-759-154-60	s	IC UPD71055GB-10-3B4	
IC601	8-759-344-84	s	IC CXD8953Q	
IC602	8-759-524-50	s	IC TC74VHC541FT(EL)	
IC603	8-759-524-50	s	IC TC74VHC541FT(EL)	
IC700	8-759-058-43	s	IC NJM3404AV	
IC701	8-759-710-88	s	IC NJM431U	
IC702	8-752-078-32	s	IC CXB1341R	
IC800	8-759-524-28	s	IC TC74VHC245FT(EL)	
IC801	8-759-524-50	s	IC TC74VHC541FT(EL)	
IC802	8-759-391-30	s	IC 74LVX3245QSCX	
IC803	8-759-271-86	s	IC TC7SH04FU	
IC804	8-759-524-07	s	IC TC74VHC138FT(EL)	
IC805	8-759-524-50	s	IC TC74VHC541FT(EL)	
IC806	8-759-524-28	s	IC TC74VHC245FT(EL)	
IC807	8-759-524-28	s	IC TC74VHC245FT(EL)	
IC808	8-759-082-57	s	IC TC7W04FU	
IC809	8-759-523-83	s	IC TC74VHC11FT(EL)	
IC810	8-759-154-60	s	IC UPD71055GB-10-3B4	
IC811	8-759-524-50	s	IC TC74VHC541FT(EL)	
IC812	8-759-523-79	s	IC TC74VHC02FT	

(SDI-23 BOARD)

Ref. No. or Q'ty	Part No.	SP	Description
L1	1-406-864-21	s	COIL,CHOKE 4.7UH
L2	1-406-864-21	s	COIL,CHOKE 4.7UH
L3	1-406-864-21	s	COIL,CHOKE 4.7UH
L100	1-410-797-11	s	CHIP INDUCTOR 0.015UH (3225)
Q100	8-729-106-68	s	TRANSISTOR 2SD1615A-GP
Q101	8-729-140-63	s	TRANSISTOR 2SA1611-M5M6
Q102	8-729-105-68	s	TRANSISTOR 2SC3356-K
Q103	8-729-105-68	s	TRANSISTOR 2SC3356-K
Q104	8-729-105-68	s	TRANSISTOR 2SC3356-K
Q450	8-729-140-63	s	TRANSISTOR 2SA1611-M5M6
Q700	8-729-106-68	s	TRANSISTOR 2SD1615A-GP
Q701	8-729-140-63	s	TRANSISTOR 2SA1611-M5M6
Q702	8-729-105-68	s	TRANSISTOR 2SC3356-K
Q703	8-729-105-68	s	TRANSISTOR 2SC3356-K
Q704	8-729-105-68	s	TRANSISTOR 2SC3356-K
Q705	8-729-105-68	s	TRANSISTOR 2SC3356-K
Q706	8-729-105-68	s	TRANSISTOR 2SC3356-K
Q707	8-729-105-68	s	TRANSISTOR 2SC3356-K
Q708	8-729-105-68	s	TRANSISTOR 2SC3356-K
Q709	8-729-105-68	s	TRANSISTOR 2SC3356-K
Q710	8-729-105-68	s	TRANSISTOR 2SC3356-K
Q711	8-729-105-68	s	TRANSISTOR 2SC3356-K
Q712	8-729-117-32	s	TRANSISTOR 2SC4177
Q713	8-729-117-32	s	TRANSISTOR 2SC4177
R100	1-218-711-11	s	RESISTOR,METAL 6.2K 1/16W
R101	1-218-701-11	s	RESISTOR,CHIP 2.4K 1/16W(1608)
R102	1 218 710 11	s	RESISTOR,CHIP 5.6K 1/16W(1608)
R103	1-218-678-11	s	RESISTOR CHIP 270 1/16W (1608)
R104	1-220-259-11	s	RESISTOR,CHIP 150 1/4W (3225)
R105	1-218-660-91	s	RESISTOR CHIP 47 1/16W (1608)
R106	1-218-660-91	s	RESISTOR CHIP 47 1/16W (1608)
R107	1-218-697-11	s	RESISTOR,CHIP 1.6K 1/16W(1608)
R108	1-218-709-11	s	RESISTOR,METAL 5.1K 1/16W
R109	1-218-712-11	s	RESISTOR,METAL 6.8K 1/16W
R110	1-216-864-11	s	RESISTOR,CHIP 0 1/16W (1608)
R111	1-216-864-11	s	RESISTOR,CHIP 0 1/16W (1608)
R112	1-218-700-11	s	RESISTOR,CHIP 2.2K 1/16W(1608)
R113	1-218-684-11	s	RESISTOR CHIP 470 1/16W (1608)
R114	1-218-684-11	s	RESISTOR CHIP 470 1/16W (1608)
R115	1-218-718-11	s	RESISTOR CHIP 12K 1/16W (1608)
R117	1-218-665-11	s	RESISTOR CHIP 75 1/16W (1608)
R118	1-218-700-11	s	RESISTOR,CHIP 2.2K 1/16W(1608)
R119	1-218-676-11	s	RESISTOR,CHIP 220 1/16W(1608)
R120	1-216-864-11	s	RESISTOR,CHIP 0 1/16W (1608)
R121	1-218-665-11	s	RESISTOR CHIP 75 1/16W (1608)
R122	1-218-665-11	s	RESISTOR CHIP 75 1/16W (1608)
R123	1-216-857-11	s	RESISTOR,CHIP 1.0M 1/16W 1608
R124	1-218-700-11	s	RESISTOR,CHIP 2.2K 1/16W(1608)
R126	1-218-665-11	s	RESISTOR CHIP 75 1/16W (1608)
R127	1-218-665-11	s	RESISTOR CHIP 75 1/16W (1608)
R128	1-218-644-11	s	RESISTOR,METAL 10 1/16W
R129	1-218-644-11	s	RESISTOR,METAL 10 1/16W
R130	1-218-644-11	s	RESISTOR,METAL 10 1/16W
R131	1-218-644-11	s	RESISTOR,METAL 10 1/16W
R133	1-218-678-11	s	RESISTOR CHIP 270 1/16W (1608)
R134	1-218-692-11	s	RESISTOR,CHIP 1.0K 1/16W(1608)
R135	1-218-678-11	s	RESISTOR CHIP 270 1/16W (1608)
R136	1-216-612-11	s	RESISTOR,CHIP 24 1/10W(2012)
R137	1-216-618-11	s	RESISTOR,CHIP 43 1/10W(2012)

(SDI-23 BOARD)

Ref. No. or Q'ty	Part No.	SP	Description
R138	1-216-623-11	s	RESISTOR,CHIP 68 1/10W(2012)
R139	1-216-612-11	s	RESISTOR,CHIP 24 1/10W(2012)
R140	1-216-649-11	s	RESISTOR,CHIP 820 1/10W (2012)
R141	1-218-660-91	s	RESISTOR CHIP 47 1/16W (1608)
R142	1-218-668-11	s	RESISTOR,CHIP 100 1/16W (1608)
R143	1-218-668-11	s	RESISTOR,CHIP 100 1/16W (1608)
R144	1-218-668-11	s	RESISTOR,CHIP 100 1/16W (1608)
R145	1-216-631-11	s	RESISTOR,CHIP 150 1/10W (2012)
R146	1-216-623-11	s	RESISTOR,CHIP 68 1/10W(2012)
R147	1-218-692-11	s	RESISTOR,CHIP 1.0K 1/16W(1608)
R148	1-218-660-91	s	RESISTOR CHIP 47 1/16W (1608)
R149	1-218-660-91	s	RESISTOR CHIP 47 1/16W (1608)
R200	1-218-660-91	s	RESISTOR CHIP 47 1/16W (1608)
R201	1-218-740-11	s	RESISTOR,CHIP 100K 1/16W(1608)
R202	1-218-660-91	s	RESISTOR CHIP 47 1/16W (1608)
R203	1-218-660-91	s	RESISTOR CHIP 47 1/16W (1608)
R204	1-218-660-91	s	RESISTOR CHIP 47 1/16W (1608)
R205	1-216-864-11	s	RESISTOR,CHIP 0 1/16W (1608)
R206	1-218-668-11	s	RESISTOR,CHIP 100 1/16W (1608)
R207	1-218-722-11	s	RESISTOR,CHIP 18K 1/16W 1608
R208	1-218-700-11	s	RESISTOR,CHIP 2.2K 1/16W(1608)
R209	1-218-718-11	s	RESISTOR CHIP 12K 1/16W (1608)
R210	1-216-854-11	s	RESISTOR,CHIP 560K 1/16W
R211	1-218-740-11	s	RESISTOR,CHIP 100K 1/16W(1608)
R212	1-218-660-91	s	RESISTOR CHIP 47 1/16W (1608)
R215	1-218-740-11	s	RESISTOR,CHIP 100K 1/16W(1608)
R216	1 216 864 11	s	RESISTOR,CHIP 0 1/16W (1608)
R217	1-218-740-11	s	RESISTOR,CHIP 100K 1/16W(1608)
R218	1-216-864-11	s	RESISTOR,CHIP 0 1/16W (1608)
R219	1-218-740-11	s	RESISTOR,CHIP 100K 1/16W(1608)
R220	1-218-660-91	s	RESISTOR CHIP 47 1/16W (1608)
R221	1-216-864-11	s	RESISTOR,CHIP 0 1/16W (1608)
R250	1-218-660-91	s	RESISTOR CHIP 47 1/16W (1608)
R251	1-216-854-11	s	RESISTOR,CHIP 560K 1/16W
R252	1-216-854-11	s	RESISTOR,CHIP 560K 1/16W
R253	1-216-854-11	s	RESISTOR,CHIP 560K 1/16W
R254	1-216-854-11	s	RESISTOR,CHIP 560K 1/16W
R300	1-218-660-91	s	RESISTOR CHIP 47 1/16W (1608)
R301	1-218-660-91	s	RESISTOR CHIP 47 1/16W (1608)
R302	1-218-668-11	s	RESISTOR,CHIP 100 1/16W (1608)
R303	1-218-668-11	s	RESISTOR,CHIP 100 1/16W (1608)
R304	1-216-647-11	s	RESISTOR,CHIP 680 1/10W (2012)
R305	1-216-647-11	s	RESISTOR,CHIP 680 1/10W (2012)
R306	1-216-647-11	s	RESISTOR,CHIP 680 1/10W (2012)
R307	1-216-647-11	s	RESISTOR,CHIP 680 1/10W (2012)
R308	1-216-647-11	s	RESISTOR,CHIP 680 1/10W (2012)
R309	1-216-647-11	s	RESISTOR,CHIP 680 1/10W (2012)
R350	1-216-864-11	s	RESISTOR,CHIP 0 1/16W (1608)
R351	1-218-660-91	s	RESISTOR CHIP 47 1/16W (1608)
R353	1-218-660-91	s	RESISTOR CHIP 47 1/16W (1608)
R354	1-216-864-11	s	RESISTOR,CHIP 0 1/16W (1608)
R355	1-218-668-11	s	RESISTOR,CHIP 100 1/16W (1608)
R400	1-218-660-91	s	RESISTOR CHIP 47 1/16W (1608)
R404	1-218-660-91	s	RESISTOR CHIP 47 1/16W (1608)
R405	1-218-660-91	s	RESISTOR CHIP 47 1/16W (1608)
R450	1-218-660-91	s	RESISTOR CHIP 47 1/16W (1608)
R451	1-218-740-11	s	RESISTOR,CHIP 100K 1/16W(1608)
R452	1-218-740-11	s	RESISTOR,CHIP 100K 1/16W(1608)
R453	1-218-668-11	s	RESISTOR,CHIP 100 1/16W (1608)

http://getMANUAL.com

(SDI-23 BOARD)

Ref. No. or Q'ty	Part No.	SP	Description
R454	1-218-740-11	s	RESISTOR,CHIP 100K 1/16W(1608)
R455	1-218-716-11	s	RESISTOR,CHIP 10K 1/16W(1608)
R456	1-218-692-11	s	RESISTOR,CHIP 1.0K 1/16W(1608)
R457	1-218-680-11	s	RESISTOR,CHIP 330 1/16W(1608)
R458	1-218-694-11	s	RESISTOR CHIP 1.2K1/16W(1608)
R459	1-218-692-11	s	RESISTOR,CHIP 1.0K 1/16W(1608)
R460	1-218-716-11	s	RESISTOR,CHIP 10K 1/16W(1608)
R461	1-218-716-11	s	RESISTOR,CHIP 10K 1/16W(1608)
R462	1-218-740-11	s	RESISTOR,CHIP 100K 1/16W(1608)
R463	1-218-692-11	s	RESISTOR,CHIP 1.0K 1/16W(1608)
R464	1-218-740-11	s	RESISTOR,CHIP 100K 1/16W(1608)
R465	1-216-864-11	s	RESISTOR,CHIP 0 1/16W (1608)
R466	1-218-692-11	s	RESISTOR,CHIP 1.0K 1/16W(1608)
R500	1-218-660-91	s	RESISTOR CHIP 47 1/16W (1608)
R501	1-218-660-91	s	RESISTOR CHIP 47 1/16W (1608)
R503	1-216-864-11	s	RESISTOR,CHIP 0 1/16W (1608)
R507	1-216-864-11	s	RESISTOR,CHIP 0 1/16W (1608)
R508	1-218-660-91	s	RESISTOR CHIP 47 1/16W (1608)
R509	1-216-864-11	s	RESISTOR,CHIP 0 1/16W (1608)
R550	1-218-660-91	s	RESISTOR CHIP 47 1/16W (1608)
R553	1-216-864-11	s	RESISTOR,CHIP 0 1/16W (1608)
R555	1-216-864-11	s	RESISTOR,CHIP 0 1/16W (1608)
R556	1-216-864-11	s	RESISTOR,CHIP 0 1/16W (1608)
R558	1-218-660-91	s	RESISTOR CHIP 47 1/16W (1608)
R560	1-216-864-11	s	RESISTOR,CHIP 0 1/16W (1608)
R562	1-218-660-91	s	RESISTOR CHIP 47 1/16W (1608)
R600	1-218-660-91	s	RESISTOR CHIP 47 1/16W (1608)
R700	1-218-711-11	s	RESISTOR,METAL 6.2K 1/16W
R701	1-218-701-11	s	RESISTOR,CHIP 2.4K 1/16W(1608)
R702	1-218-710-11	s	RESISTOR,CHIP 5.6K 1/16W(1608)
R703	1-218-678-11	s	RESISTOR CHIP 270 1/16W (1608)
R704	1-220-259-11	s	RESISTOR,CHIP 150 1/4W (3225)
R705	1-218-660-91	s	RESISTOR CHIP 47 1/16W (1608)
R706	1-218-660-91	s	RESISTOR CHIP 47 1/16W (1608)
R707	1-218-712-11	s	RESISTOR,METAL 6.8K 1/16W
R708	1-218-697-11	s	RESISTOR,CHIP 1.6K 1/16W(1608)
R709	1-218-709-11	s	RESISTOR,METAL 5.1K 1/16W
R710	1-216-864-11	s	RESISTOR,CHIP 0 1/16W (1608)
R711	1-218-684-11	s	RESISTOR CHIP 470 1/16W (1608)
R712	1-216-864-11	s	RESISTOR,CHIP 0 1/16W (1608)
R713	1-218-700-11	s	RESISTOR,CHIP 2.2K 1/16W(1608)
R714	1-218-720-11	s	RESISTOR,CHIP 15K 1/16W(1608)
R715	1-218-720-11	s	RESISTOR,CHIP 15K 1/16W(1608)
R716	1-218-718-11	s	RESISTOR CHIP 12K 1/16W (1608)
R718	1-218-700-11	s	RESISTOR,CHIP 2.2K 1/16W(1608)
R719	1-218-700-11	s	RESISTOR,CHIP 2.2K 1/16W(1608)
R720	1-218-660-91	s	RESISTOR CHIP 47 1/16W (1608)
R721	1-218-692-11	s	RESISTOR,CHIP 1.0K 1/16W(1608)
R722	1-218-660-91	s	RESISTOR CHIP 47 1/16W (1608)
R723	1-218-696-11	s	RESISTOR CHIP 1.5K 1/16W(1608)
R725	1-218-678-11	s	RESISTOR CHIP 270 1/16W (1608)
R726	1-218-660-91	s	RESISTOR CHIP 47 1/16W (1608)
R727	1-218-678-11	s	RESISTOR CHIP 270 1/16W (1608)
R728	1-218-660-91	s	RESISTOR CHIP 47 1/16W (1608)
R729	1-218-660-91	s	RESISTOR CHIP 47 1/16W (1608)
R730	1-216-610-11	s	RESISTOR,CHIP 20 1/10W(2012)
R731	1-216-618-11	s	RESISTOR,CHIP 43 1/10W(2012)
R732	1-218-678-11	s	RESISTOR CHIP 270 1/16W (1608)
R733	1-216-623-11	s	RESISTOR,CHIP 68 1/10W(2012)

(SDI-23 BOARD)

Ref. No. or Q'ty	Part No.	SP	Description
R734	1-218-674-11	s	RESISTOR CHIP 180 1/16W (1608)
R735	1-216-612-11	s	RESISTOR,CHIP 24 1/10W(2012)
R736	1-216-618-11	s	RESISTOR,CHIP 43 1/10W(2012)
R737	1-216-619-11	s	RESISTOR CHIP 47 1/10W(2012)
R738	1-216-613-11	s	RESISTOR,CHIP 27 1/10W(2012)
R739	1-216-613-11	s	RESISTOR,CHIP 27 1/10W(2012)
R740	1-218-711-11	s	RESISTOR,METAL 6.2K 1/16W
R741	1-218-716-11	s	RESISTOR,CHIP 10K 1/16W(1608)
R742	1-216-623-11	s	RESISTOR,CHIP 68 1/10W(2012)
R743	1-216-612-11	s	RESISTOR,CHIP 24 1/10W(2012)
R744	1-216-649-11	s	RESISTOR,CHIP 820 1/10W (2012)
R745	1-216-619-11	s	RESISTOR CHIP 47 1/10W(2012)
R746	1-216-613-11	s	RESISTOR,CHIP 27 1/10W(2012)
R747	1-218-660-91	s	RESISTOR CHIP 47 1/16W (1608)
R748	1-218-660-91	s	RESISTOR CHIP 47 1/16W (1608)
R749	1-218-660-91	s	RESISTOR CHIP 47 1/16W (1608)
R750	1-218-660-91	s	RESISTOR CHIP 47 1/16W (1608)
R751	1-216-631-11	s	RESISTOR,CHIP 150 1/10W (2012)
R752	1-216-295-91	s	RESISTOR,CHIP 0 (1/10W)
R753	1-216-627-11	s	RESISTOR,CHIP 100 1/10W (2012)
R754	1-216-631-11	s	RESISTOR,CHIP 150 1/10W (2012)
R755	1-216-295-91	s	RESISTOR,CHIP 0 (1/10W)
R756	1-216-627-11	s	RESISTOR,CHIP 100 1/10W (2012)
R757	1-218-692-11	s	RESISTOR,CHIP 1.0K 1/16W(1608)
R758	1-216-623-11	s	RESISTOR,CHIP 68 1/10W(2012)
R759	1-216-623-11	s	RESISTOR,CHIP 68 1/10W(2012)
R760	1-218-692-11	s	RESISTOR,CHIP 1.0K 1/16W(1608)
R800	1-216-647-11	s	RESISTOR,CHIP 680 1/10W (2012)
R801	1-216-647-11	s	RESISTOR,CHIP 680 1/10W (2012)
RB100	1-239-412-11	s	NETWORK, RESISTOR 100 (1608)
RB101	1-239-412-11	s	NETWORK, RESISTOR 100 (1608)
RB102	1-239-412-11	s	NETWORK, RESISTOR 100 (1608)
RB250	1-239-412-11	s	NETWORK, RESISTOR 100 (1608)
RB251	1-239-412-11	s	NETWORK, RESISTOR 100 (1608)
RB252	1-239-412-11	s	NETWORK, RESISTOR 100 (1608)
RB300	1-239-309-11	s	RESISTOR ARRAY,CHIP 100K
RB301	1-239-309-11	s	RESISTOR ARRAY,CHIP 100K
RB350	1-239-309-11	s	RESISTOR ARRAY,CHIP 100K
RB351	1-239-309-11	s	RESISTOR ARRAY,CHIP 100K
RB352	1-236-904-11	s	RESISTOR NETWORK 1K (1608)
RB353	1-239-412-11	s	NETWORK, RESISTOR 100 (1608)
RB354	1-239-412-11	s	NETWORK, RESISTOR 100 (1608)
RB400	1-239-412-11	s	NETWORK, RESISTOR 100 (1608)
RB401	1-239-412-11	s	NETWORK, RESISTOR 100 (1608)
RB402	1-239-412-11	s	NETWORK, RESISTOR 100 (1608)
RB403	1-239-412-11	s	NETWORK, RESISTOR 100 (1608)
RB450	1-236-907-11	s	RESISTOR BLOCK 100K (1608)
RB451	1-233-936-11	s	NETWORK RESISTOR 10 (1608)
RB452	1-236-907-11	s	RESISTOR BLOCK 100K (1608)
RB453	1-236-904-11	s	RESISTOR NETWORK 1K (1608)
RB454	1-239-412-11	s	NETWORK, RESISTOR 100 (1608)
RB500	1-239-309-11	s	RESISTOR ARRAY,CHIP 100K
RB501	1-236-907-11	s	RESISTOR BLOCK 100K (1608)
RB550	1-239-309-11	s	RESISTOR ARRAY,CHIP 100K
RB551	1-239-309-11	s	RESISTOR ARRAY,CHIP 100K
RB600	1-239-309-11	s	RESISTOR ARRAY,CHIP 100K
RB601	1-239-309-11	s	RESISTOR ARRAY,CHIP 100K
RB602	1-239-309-11	s	RESISTOR ARRAY,CHIP 100K
RB700	1-239-412-11	s	NETWORK, RESISTOR 100 (1608)

(SDI-23 BOARD)

Ref. No. or Q'ty	Part No.	SP	Description
RB701	1-239-412-11	s	NETWORK, RESISTOR 100 (1608)
RB702	1-239-412-11	s	NETWORK, RESISTOR 100 (1608)
RB800	1-239-309-11	s	RESISTOR ARRAY,CHIP 100K
RB801	1-239-309-11	s	RESISTOR ARRAY,CHIP 100K
RB802	1-239-309-11	s	RESISTOR ARRAY,CHIP 100K
RB803	1-233-936-11	s	NETWORK RESISTOR 10 (1608)
RB804	1-233-936-11	s	NETWORK RESISTOR 10 (1608)
RB805	1-233-936-11	s	NETWORK RESISTOR 10 (1608)
RB806	1-233-936-11	s	NETWORK RESISTOR 10 (1608)
RB807	1-233-936-11	s	NETWORK RESISTOR 10 (1608)
RB808	1-233-936-11	s	NETWORK RESISTOR 10 (1608)
RB809	1-239-309-11	s	RESISTOR ARRAY,CHIP 100K
RB810	1-236-907-11	s	RESISTOR BLOCK 100K (1608)
RB811	1-239-309-11	s	RESISTOR ARRAY,CHIP 100K
RB812	1-236-907-11	s	RESISTOR BLOCK 100K (1608)

SE-529 BOARD

Ref. No. or Q'ty	Part No.	SP	Description
1pc	A-8322-972-A	o	MOUNTED CIRCUIT BOARD, SE-529
C1	1-163-011-11	s	CAPACITOR,CHIP CERAMIC 1500PF
C2	1-164-004-11	s	CAPACITOR,CERAMIC 0.1MF/25V
C4	1-164-004-11	s	CAPACITOR,CERAMIC 0.1MF/25V
C5	1-164-004-11	s	CAPACITOR,CERAMIC 0.1MF/25V
C6	1-107-417-11	s	CAPACITOR ERECT 33MF/25V(105C)
C7	1-164-004-11	s	CAPACITOR,CERAMIC 0.1MF/25V
C8	1-163-011-11	s	CAPACITOR,CHIP CERAMIC 1500PF
C9	1-163-017-00	s	CAPACITOR,CHIP CERAMIC 4700PF
C10	1-107-417-11	s	CAPACITOR ERECT 33MF/25V(105C)
C11	1-164-004-11	s	CAPACITOR,CERAMIC 0.1MF/25V
C12	1-164-004-11	s	CAPACITOR,CERAMIC 0.1MF/25V
CN1	1-580-756-21	o	PIN, CONNECTOR 7P
CN2	1-580-055-21	o	PIN, CONNECTOR 2P
D1	8-719-106-53	s	DIODE RD10M-B2
D2	8-719-105-91	s	DIODE RD5.6M-B2
D3	8-719-066-98	s	DIODE RB051L-40
IC1	8-759-594-94	s	IC BA6286
IC2	8-759-521-35	s	IC TL5001CD
IC3	8-759-257-96	s	IC TC7S14FU (TE85R)
L1	1-414-392-21	s	INDUCTOR (SMD) 1.0UH
L2	1-414-392-21	s	INDUCTOR (SMD) 1.0UH
L3	1-424-642-11	s	COIL, CHOKE 47UH
PH1	8 749 010 00	s	PHOTO INTERRUPTER GP1S33
PH2	8-749-010-00	s	PHOTO INTERRUPTER GP1S33
PH3	8-749-010-00	s	PHOTO INTERRUPTER GP1S33
Q1	8-729-109-44	s	TRANSISTOR 2SK94
Q2	8-729-117-32	s	TRANSISTOR 2SC4177
Q3	8-729-117-32	s	TRANSISTOR 2SC4177
Q4	8-729-117-32	s	TRANSISTOR 2SC4177
Q5	8-729-117-32	s	TRANSISTOR 2SC4177
Q6	8-729-140-63	s	TRANSISTOR 2SA1611-M5M6
Q8	8-729-024-91	s	TRANSISTOR 2SC2712-GL-TE85L
Q9	8-729-117-32	s	TRANSISTOR 2SC4177
Q10	8-729-117-32	s	TRANSISTOR 2SC4177
Q11	8-729-036-15	s	TRANSISTOR SI6542DQ-TL
R1	1-220-228-11	s	RESISTOR CHIP 1.5 1/4W (3225)
R2	1-216-663-11	s	RESISTOR,CHIP 3.3K 1/10W(2012)
R3	1-218-764-11	s	RESISTOR,CHIP 330K 1/10W(2012)
R4	1-216-651-11	s	RESISTOR,CHIP 1K 1/10W(2012)
R5	1-216-691-11	s	RESISTOR CHIP 47K 1/10W(2012)
R6	1-216-667-11	s	RESISTOR,CHIP 4.7K 1/10W(2012)
R8	1-216-679-11	s	RESISTOR CHIP 15K 1/10W (2012)
R9	1-216-699-11	s	RESISTOR,CHIP 100K 1/10W(2012)
R10	1-216-699-11	s	RESISTOR,CHIP 100K 1/10W(2012)
R11	1-216-679-11	s	RESISTOR CHIP 15K 1/10W (2012)
R12	1-216-619-11	s	RESISTOR CHIP 47 1/10W(2012)
R13	1-216-651-11	s	RESISTOR,CHIP 1K 1/10W(2012)
R14	1-216-663-11	s	RESISTOR,CHIP 3.3K 1/10W(2012)
R15	1-216-651-11	s	RESISTOR,CHIP 1K 1/10W(2012)
R16	1-216-687-11	s	RESISTOR CHIP 33K 1/10W (2012)
R17	1-216-651-11	s	RESISTOR,CHIP 1K 1/10W(2012)
R18	1-216-651-11	s	RESISTOR,CHIP 1K 1/10W(2012)
R19	1-216-687-11	s	RESISTOR CHIP 33K 1/10W (2012)
R20	1-216-687-11	s	RESISTOR CHIP 33K 1/10W (2012)
R21	1-218-764-11	s	RESISTOR,CHIP 330K 1/10W(2012)

(SE-529 BOARD)

Ref. No. or Q'ty	Part No.	SP	Description
R22	1-218-764-11	s	RESISTOR,CHIP 330K 1/10W(2012)
R23	1-216-651-11	s	RESISTOR,CHIP 1K 1/10W(2012)
R24	1-216-651-11	s	RESISTOR,CHIP 1K 1/10W(2012)

SR-65 BOARD

Ref. No. or Q'ty	Part No.	SP	Description
1pc	A-8316-674-A	o	MOUNTED CIRCUIT BOARD, SR-65
C1	1-162-919-11	s	CAPACITOR,CERAMIC 22PF/50V CH
C2	1-104-851-11	s	CAPACITOR,TANTALUM 10MF/10V
C3	1-104-851-11	s	CAPACITOR,TANTALUM 10MF/10V
CN1	1-573-290-21	s	PIN,CONNECTOR (4P)(SMD)(1.5MM)
IC1	8-719-821-03	s	DIODE THS117
IC2	8-759-440-71	s	IC NJM2119M (TE1)
R1	1-218-690-11	s	RESISTOR CHIP 820 1/16W (1608)
R3	1-218-712-11	s	RESISTOR,METAL 6.8K 1/16W
R5	1-218-712-11	s	RESISTOR,METAL 6.8K 1/16W
R6	1-218-724-11	s	RESISTOR,CHIP 22K 1/16W(1608)
R7	1-218-724-11	s	RESISTOR,CHIP 22K 1/16W(1608)
R8	1-218-700-11	s	RESISTOR,CHIP 2.2K 1/16W(1608)
R9	1-218-748-11	s	RESISTOR,CHIP 220K 1/16W(1608)
R10	1-218-732-11	s	RESISTOR,CHIP 47K 1/16W(1608)
RV1	1-237-038-11	s	RESISTOR,ADJ,CERMET 50K
RV2	1-237-037-11	s	RESISTOR,ADJ,CERMET 20K

SV-194A BOARD

Ref. No. or Q'ty	Part No.	SP	Description
1pc	A-8323-004-A	o	MOUNTED CIRCUIT BOARD, SV-194A
1pc	A-8278-854-A	o	SWITCH ASSY,REC INHI (See the Exploded View.)
1pc	A-8278-724-A	o	HOLDER ASSY SENSOR(ID) (See the Exploded View.)
1pc	3-612-820-03	o	HOLDER,SV SENSOR
1pc	3-612-505-02	o	SHEET,SV
C1	1-126-397-11	s	CAPACITOR ELECT 33MF/25V(CHIP)
C2	1-126-394-11	s	CAPACITOR ELECT 10MF/16V(CHIP)
C3	1-126-394-11	s	CAPACITOR ELECT 10MF/16V(CHIP)
C4	1-126-394-11	s	CAPACITOR ELECT 10MF/16V(CHIP)
C5	1-126-394-11	s	CAPACITOR ELECT 10MF/16V(CHIP)
C6	1-126-394-11	s	CAPACITOR ELECT 10MF/16V(CHIP)
C7	1-126-396-11	s	CAPACITOR ELECT 47MF/16V(CHIP)
C8	1-126-396-11	s	CAPACITOR ELECT 47MF/16V(CHIP)
C9	1-126-396-11	s	CAPACITOR ELECT 47MF/16V(CHIP)
C10	1-126-396-11	s	CAPACITOR ELECT 47MF/16V(CHIP)
C11	1-104-609-11	s	CAPACITOR,ELECT 100MF/4V CHIP
C14	1-126-397-11	s	CAPACITOR ELECT 33MF/25V(CHIP)
C17	1-107-826-11	s	CAPACITOR,CHIP CERAMIC 0.1MF
C100	1-126-401-11	s	CAPACITOR,ELECT 1MF/50V(CHIP)
C101	1-165-176-11	s	CAPACITOR,CERAMIC 47000PF/16V
C102	1-165-176-11	s	CAPACITOR,CERAMIC 47000PF/16V
C103	1-165-176-11	s	CAPACITOR,CERAMIC 47000PF/16V
C104	1-162-927-11	s	CAPACITOR,CERAMIC 100PF/50V CH
C105	1-162-927-11	s	CAPACITOR,CERAMIC 100PF/50V CH
C106	1-107-826-11	s	CAPACITOR,CHIP CERAMIC 0.1MF
C107	1-162-927-11	s	CAPACITOR,CERAMIC 100PF/50V CH
C108	1-162-913-11	s	CAPACITOR,CHIP CERAMIC 8PF/50V
C109	1-162-913-11	s	CAPACITOR,CHIP CERAMIC 8PF/50V
C110	1-107-826-11	s	CAPACITOR,CHIP CERAMIC 0.1MF
C111	1-107-826-11	s	CAPACITOR,CHIP CERAMIC 0.1MF
C112	1-107-826-11	s	CAPACITOR,CHIP CERAMIC 0.1MF
C113	1-126-394-11	s	CAPACITOR ELECT 10MF/16V(CHIP)
C114	1-107-826-11	s	CAPACITOR,CHIP CERAMIC 0.1MF
C115	1-107-826-11	s	CAPACITOR,CHIP CERAMIC 0.1MF
C116	1-165-176-11	s	CAPACITOR,CERAMIC 47000PF/16V
C117	1-107-826-11	s	CAPACITOR,CHIP CERAMIC 0.1MF
C118	1-107-826-11	s	CAPACITOR,CHIP CERAMIC 0.1MF
C119	1-107-826-11	s	CAPACITOR,CHIP CERAMIC 0.1MF
C120	1-107-826-11	s	CAPACITOR,CHIP CERAMIC 0.1MF
C121	1-107-826-11	s	CAPACITOR,CHIP CERAMIC 0.1MF
C122	1-107-826-11	s	CAPACITOR,CHIP CERAMIC 0.1MF
C123	1-107-826-11	s	CAPACITOR,CHIP CERAMIC 0.1MF
C124	1-107-826-11	s	CAPACITOR,CHIP CERAMIC 0.1MF
C125	1-107-826-11	s	CAPACITOR,CHIP CERAMIC 0.1MF
C126	1-107-826-11	s	CAPACITOR,CHIP CERAMIC 0.1MF
C127	1-162-964-11	s	CAPACITOR,CERAMIC 1000PF/50V B
C128	1-107-826-11	s	CAPACITOR,CHIP CERAMIC 0.1MF
C129	1-107-826-11	s	CAPACITOR,CHIP CERAMIC 0.1MF
C200	1-162-964-11	s	CAPACITOR,CERAMIC 1000PF/50V B
C201	1-162-964-11	s	CAPACITOR,CERAMIC 1000PF/50V B
C202	1-162-964-11	s	CAPACITOR,CERAMIC 1000PF/50V B
C203	1-162-964-11	s	CAPACITOR,CERAMIC 1000PF/50V B
C204	1-107-826-11	s	CAPACITOR,CHIP CERAMIC 0.1MF
C205	1-107-826-11	s	CAPACITOR,CHIP CERAMIC 0.1MF
C206	1-162-964-11	s	CAPACITOR,CERAMIC 1000PF/50V B
C207	1-162-964-11	s	CAPACITOR,CERAMIC 1000PF/50V B
C208	1-162-964-11	s	CAPACITOR,CERAMIC 1000PF/50V B

(SV-194A BOARD)

Ref. No. or Q'ty	Part No.	SP	Description
C210	1-162-964-11	s	CAPACITOR,CERAMIC 1000PF/50V B
C211	1-162-964-11	s	CAPACITOR,CERAMIC 1000PF/50V B
C212	1-164-227-11	s	CAPACITOR,CERAMIC 0.022MF/25V
C213	1-107-826-11	s	CAPACITOR,CHIP CERAMIC 0.1MF
C214	1-162-968-11	s	CAPACITOR,CERAMIC 4700PF/50V B
C215	1-164-227-11	s	CAPACITOR,CERAMIC 0.022MF/25V
C216	1-164-227-11	s	CAPACITOR,CERAMIC 0.022MF/25V
C217	1-107-826-11	s	CAPACITOR,CHIP CERAMIC 0.1MF
C218	1-107-826-11	s	CAPACITOR,CHIP CERAMIC 0.1MF
C219	1-164-227-11	s	CAPACITOR,CERAMIC 0.022MF/25V
C220	1-162-970-11	s	CAPACITOR CERAMIC 0.01MF/25V B
C221	1-162-970-11	s	CAPACITOR CERAMIC 0.01MF/25V B
C223	1-107-826-11	s	CAPACITOR,CHIP CERAMIC 0.1MF
C224	1-107-826-11	s	CAPACITOR,CHIP CERAMIC 0.1MF
C226	1-107-826-11	s	CAPACITOR,CHIP CERAMIC 0.1MF
C227	1-107-826-11	s	CAPACITOR,CHIP CERAMIC 0.1MF
C230	1-107-826-11	s	CAPACITOR,CHIP CERAMIC 0.1MF
C231	1-107-826-11	s	CAPACITOR,CHIP CERAMIC 0.1MF
C232	1-107-826-11	s	CAPACITOR,CHIP CERAMIC 0.1MF
C235	1-107-826-11	s	CAPACITOR,CHIP CERAMIC 0.1MF
C236	1-107-826-11	s	CAPACITOR,CHIP CERAMIC 0.1MF
C300	1-107-826-11	s	CAPACITOR,CHIP CERAMIC 0.1MF
C301	1-107-826-11	s	CAPACITOR,CHIP CERAMIC 0.1MF
C302	1-107-826-11	s	CAPACITOR,CHIP CERAMIC 0.1MF
C303	1-107-826-11	s	CAPACITOR,CHIP CERAMIC 0.1MF
C304	1-107-826-11	s	CAPACITOR,CHIP CERAMIC 0.1MF
C305	1 107 826 11	s	CAPACITOR,CHIP CERAMIC 0.1MF
C306	1-107-826-11	s	CAPACITOR,CHIP CERAMIC 0.1MF
C307	1-107-826-11	s	CAPACITOR,CHIP CERAMIC 0.1MF
C308	1-107-826-11	s	CAPACITOR,CHIP CERAMIC 0.1MF
C309	1-107-826-11	s	CAPACITOR,CHIP CERAMIC 0.1MF
C400	1-162-927-11	s	CAPACITOR,CERAMIC 100PF/50V CH
C401	1-164-227-11	s	CAPACITOR,CERAMIC 0.022MF/25V
C402	1-125-565-11	s	CAPACITOR,DOUBLE LAYERS 5.5V
C403	1-115-419-11	s	CAPACITOR,CHIP CERAMIC3300PF
C404	1-115-419-11	s	CAPACITOR,CHIP CERAMIC3300PF
C405	1-164-227-11	s	CAPACITOR,CERAMIC 0.022MF/25V
C406	1-126-394-11	s	CAPACITOR ELECT 10MF/16V(CHIP)
C407	1-165-176-11	s	CAPACITOR,CERAMIC 47000PF/16V
C408	1-165-176-11	s	CAPACITOR,CERAMIC 47000PF/16V
C409	1-164-230-11	s	CAPACITOR,CERAMIC 220PF/50V
C410	1-162-927-11	s	CAPACITOR,CERAMIC 100PF/50V CH
C411	1-164-227-11	s	CAPACITOR,CERAMIC 0.022MF/25V
C412	1-164-227-11	s	CAPACITOR,CERAMIC 0.022MF/25V
C413	1-107-854-11	s	CAPACITOR TANTALUM 68MF/6.3V
C414	1-107-854-11	s	CAPACITOR TANTALUM 68MF/6.3V
C415	1-164-227-11	s	CAPACITOR,CERAMIC 0.022MF/25V
C416	1-164-245-11	s	CAPACITOR,CERAMIC 0.015MF/25V
C417	1-126-396-11	s	CAPACITOR ELECT 47MF/16V(CHIP)
C418	1-115-670-11	s	CAPACITOR ELECT 220MF/35V(CHIP
C419	1-126-399-11	s	CAPACITOR ELECT 10MF/35V(CHIP)
C420	1-164-227-11	s	CAPACITOR,CERAMIC 0.022MF/25V
C421	1-164-227-11	s	CAPACITOR,CERAMIC 0.022MF/25V
C422	1-164-227-11	s	CAPACITOR,CERAMIC 0.022MF/25V
C423	1-164-227-11	s	CAPACITOR,CERAMIC 0.022MF/25V
C424	1-164-227-11	s	CAPACITOR,CERAMIC 0.022MF/25V
C425	1-164-227-11	s	CAPACITOR,CERAMIC 0.022MF/25V
C500	1-126-394-11	s	CAPACITOR ELECT 10MF/16V(CHIP)
C501	1-165-176-11	s	CAPACITOR,CERAMIC 47000PF/16V

(SV-194A BOARD)

Ref. No. or Q'ty	Part No.	SP	Description
C502	1-164-227-11	s	CAPACITOR,CERAMIC 0.022MF/25V
C503	1-107-826-11	s	CAPACITOR,CHIP CERAMIC 0.1MF
C504	1-164-227-11	s	CAPACITOR,CERAMIC 0.022MF/25V
C505	1-107-826-11	s	CAPACITOR,CHIP CERAMIC 0.1MF
C506	1-107-826-11	s	CAPACITOR,CHIP CERAMIC 0.1MF
C507	1-104-559-11	s	CAPACITOR FILM 0.047MF/16V
C508	1-115-419-11	s	CAPACITOR,CHIP CERAMIC3300PF
C509	1-165-176-11	s	CAPACITOR,CERAMIC 47000PF/16V
C510	1-104-851-11	s	CAPACITOR,TANTALUM 10MF/10V
C511	1-162-927-11	s	CAPACITOR,CERAMIC 100PF/50V CH
C512	1-162-964-11	s	CAPACITOR,CERAMIC 1000PF/50V B
C513	1-164-227-11	s	CAPACITOR,CERAMIC 0.022MF/25V
C514	1-107-826-11	s	CAPACITOR,CHIP CERAMIC 0.1MF
C515	1-104-559-11	s	CAPACITOR FILM 0.047MF/16V
C516	1-162-964-11	s	CAPACITOR,CERAMIC 1000PF/50V B
C517	1-115-419-11	s	CAPACITOR,CHIP CERAMIC3300PF
C518	1-104-851-11	s	CAPACITOR,TANTALUM 10MF/10V
C519	1-162-927-11	s	CAPACITOR,CERAMIC 100PF/50V CH
C520	1-164-227-11	s	CAPACITOR,CERAMIC 0.022MF/25V
C521	1-126-394-11	s	CAPACITOR ELECT 10MF/16V(CHIP)
C522	1-162-970-11	s	CAPACITOR CERAMIC 0.01MF/25V B
C523	1-164-346-11	s	CAPACITOR CHIP CERAMIC 1MF/16V
C524	1-164-227-11	s	CAPACITOR,CERAMIC 0.022MF/25V
C525	1-162-970-11	s	CAPACITOR CERAMIC 0.01MF/25V B
C526	1-164-346-11	s	CAPACITOR CHIP CERAMIC 1MF/16V
C527	1-162-965-11	s	CAPACITOR,CERAMIC 1500PF/50V B
C528	1 162 965 11	s	CAPACITOR,CERAMIC 1500PF/50V B
C600	1-164-739-11	s	CAPACITOR CERAMIC 560PF (1608)
C601	1-162-967-11	s	CAPACITOR,CERAMIC 3300PF/50V B
C602	1-162-964-11	s	CAPACITOR,CERAMIC 1000PF/50V B
C603	1-162-927-11	s	CAPACITOR,CERAMIC 100PF/50V CH
C604	1-162-965-11	s	CAPACITOR,CERAMIC 1500PF/50V B
C605	1-162-919-11	s	CAPACITOR,CERAMIC 22PF/50V CH
C606	1-164-227-11	s	CAPACITOR,CERAMIC 0.022MF/25V
C607	1-126-397-11	s	CAPACITOR ELECT 33MF/25V(CHIP)
C608	1-162-928-11	s	CAPACITOR,CERAMIC 120PF/50V CH
C609	1-126-397-11	s	CAPACITOR ELECT 33MF/25V(CHIP)
C610	1-162-964-11	s	CAPACITOR,CERAMIC 1000PF/50V B
C611	1-164-227-11	s	CAPACITOR,CERAMIC 0.022MF/25V
C612	1-162-968-11	s	CAPACITOR,CERAMIC 4700PF/50V B
C613	1-126-397-11	s	CAPACITOR ELECT 33MF/25V(CHIP)
C614	1-164-227-11	s	CAPACITOR,CERAMIC 0.022MF/25V
C615	1-164-227-11	s	CAPACITOR,CERAMIC 0.022MF/25V
C616	1-126-394-11	s	CAPACITOR ELECT 10MF/16V(CHIP)
C617	1-162-967-11	s	CAPACITOR,CERAMIC 3300PF/50V B
C618	1-164-739-11	s	CAPACITOR CERAMIC 560PF (1608)
C619	1-162-964-11	s	CAPACITOR,CERAMIC 1000PF/50V B
C620	1-164-230-11	s	CAPACITOR,CERAMIC 220PF/50V
C622	1-164-227-11	s	CAPACITOR,CERAMIC 0.022MF/25V
C623	1-162-928-11	s	CAPACITOR,CERAMIC 120PF/50V CH
C624	1-162-927-11	s	CAPACITOR,CERAMIC 100PF/50V CH
C625	1-126-397-11	s	CAPACITOR ELECT 33MF/25V(CHIP)
C626	1-107-826-11	s	CAPACITOR,CHIP CERAMIC 0.1MF
C627	1-162-968-11	s	CAPACITOR,CERAMIC 4700PF/50V B
C628	1-126-397-11	s	CAPACITOR ELECT 33MF/25V(CHIP)
C630	1-115-467-11	s	CAPACITOR CERAMIC 0.22MF/10V B
C631	1-126-399-11	s	CAPACITOR ELECT 10MF/35V(CHIP)
C632	1-115-467-11	s	CAPACITOR CERAMIC 0.22MF/10V B
C633	1-107-826-11	s	CAPACITOR,CHIP CERAMIC 0.1MF

(SV-194A BOARD)

Ref. No. or Q'ty	Part No.	SP	Description
C634	1-104-851-11	s	CAPACITOR,TANTALUM 10MF/10V
C635	1-115-467-11	s	CAPACITOR CERAMIC 0.22MF/10V B
C636	1-115-467-11	s	CAPACITOR CERAMIC 0.22MF/10V B
C637	1-126-399-11	s	CAPACITOR ELECT 10MF/35V(CHIP)
C638	1-107-826-11	s	CAPACITOR,CHIP CERAMIC 0.1MF
C639	1-162-927-11	s	CAPACITOR,CERAMIC 100PF/50V CH
C640	1-165-176-11	s	CAPACITOR,CERAMIC 47000PF/16V
C641	1-162-923-11	s	CAPACITOR,CERAMIC 47PF/50V CH
C700	1-104-851-11	s	CAPACITOR,TANTALUM 10MF/10V
C701	1-104-851-11	s	CAPACITOR,TANTALUM 10MF/10V
C702	1-104-851-11	s	CAPACITOR,TANTALUM 10MF/10V
C703	1-104-851-11	s	CAPACITOR,TANTALUM 10MF/10V
C704	1-162-923-11	s	CAPACITOR,CERAMIC 47PF/50V CH
C705	1-104-559-11	s	CAPACITOR FILM 0.047MF/16V
C706	1-162-970-11	s	CAPACITOR CERAMIC 0.01MF/25V B
C707	1-162-970-11	s	CAPACITOR CERAMIC 0.01MF/25V B
C710	1-162-923-11	s	CAPACITOR,CERAMIC 47PF/50V CH
C711	1-162-970-11	s	CAPACITOR CERAMIC 0.01MF/25V B
C712	1-104-851-11	s	CAPACITOR,TANTALUM 10MF/10V
C713	1-162-928-11	s	CAPACITOR,CERAMIC 120PF/50V CH
C714	1-104-851-11	s	CAPACITOR,TANTALUM 10MF/10V
C715	1-162-965-11	s	CAPACITOR,CERAMIC 1500PF/50V B
C716	1-162-958-11	s	CAPACITOR,CERAMIC 270PF/50V SL
C717	1-135-072-21	s	CAPACITOR,TANTALUM 0.22MF/35V
C718	1-162-919-11	s	CAPACITOR,CERAMIC 22PF/50V CH
C719	1-164-227-11	s	CAPACITOR,CERAMIC 0.022MF/25V
C720	1 162 969 11	s	CAPACITOR,CERAMIC 6800PF/25V B
C721	1-162-970-11	s	CAPACITOR CERAMIC 0.01MF/25V B
C722	1-162-919-11	s	CAPACITOR,CERAMIC 22PF/50V CH
C723	1-126-397-11	s	CAPACITOR ELECT 33MF/25V(CHIP)
C724	1-164-230-11	s	CAPACITOR,CERAMIC 220PF/50V
C725	1-164-230-11	s	CAPACITOR,CERAMIC 220PF/50V
C726	1-162-968-11	s	CAPACITOR,CERAMIC 4700PF/50V B
C727	1-126-397-11	s	CAPACITOR ELECT 33MF/25V(CHIP)
C728	1-164-227-11	s	CAPACITOR,CERAMIC 0.022MF/25V
C729	1-107-826-11	s	CAPACITOR,CHIP CERAMIC 0.1MF
C730	1-107-826-11	s	CAPACITOR,CHIP CERAMIC 0.1MF
C731	1-164-227-11	s	CAPACITOR,CERAMIC 0.022MF/25V
C732	1-107-826-11	s	CAPACITOR,CHIP CERAMIC 0.1MF
C733	1-107-826-11	s	CAPACITOR,CHIP CERAMIC 0.1MF
C734	1-107-826-11	s	CAPACITOR,CHIP CERAMIC 0.1MF
C735	1-107-826-11	s	CAPACITOR,CHIP CERAMIC 0.1MF
C736	1-104-851-11	s	CAPACITOR,TANTALUM 10MF/10V
C737	1-164-227-11	s	CAPACITOR,CERAMIC 0.022MF/25V
C900	1-126-394-11	s	CAPACITOR ELECT 10MF/16V(CHIP)
C901	1-126-394-11	s	CAPACITOR ELECT 10MF/16V(CHIP)
C902	1-104-557-11	s	CAPACITOR,CHIP FILM 0.0033MF
C903	1-104-847-11	s	CAPACITOR TANTALUM 22MF/4V
C904	1-107-826-11	s	CAPACITOR,CHIP CERAMIC 0.1MF
C905	1-104-847-11	s	CAPACITOR TANTALUM 22MF/4V
C906	1-135-259-11	s	CAPACITOR TANTALUM 10MF/6.3VF
C907	1-164-230-11	s	CAPACITOR,CERAMIC 220PF/50V
C909	1-164-218-11	s	CAPACITOR,CERAMIC 180PF/50V CH
C950	1-126-394-11	s	CAPACITOR ELECT 10MF/16V(CHIP)
C951	1-107-826-11	s	CAPACITOR,CHIP CERAMIC 0.1MF
C952	1-162-968-11	s	CAPACITOR,CERAMIC 4700PF/50V B
C953	1-162-968-11	s	CAPACITOR,CERAMIC 4700PF/50V B
C954	1-126-395-11	s	CAPACITOR ELECT 22MF/16V(CHIP)
C955	1-109-898-11	s	CAPACITOR,CHIP CERAMIC 18000PF

(SV-194A BOARD)

Ref. No. or Q'ty	Part No.	SP	Description
C956	1-109-897-11	s	CAPACITOR,CHIP CERAMIC 0.015MF
C957	1-126-394-11	s	CAPACITOR ELECT 10MF/16V(CHIP)
C958	1-107-826-11	s	CAPACITOR,CHIP CERAMIC 0.1MF
C959	1-162-968-11	s	CAPACITOR,CERAMIC 4700PF/50V B
C960	1-162-968-11	s	CAPACITOR,CERAMIC 4700PF/50V B
C961	1-126-395-11	s	CAPACITOR ELECT 22MF/16V(CHIP)
C962	1-109-898-11	s	CAPACITOR,CHIP CERAMIC 18000PF
C963	1-109-897-11	s	CAPACITOR,CHIP CERAMIC 0.015MF
C964	1-162-970-11	s	CAPACITOR CERAMIC 0.01MF/25V B
C965	1-162-970-11	s	CAPACITOR CERAMIC 0.01MF/25V B
C966	1-162-968-11	s	CAPACITOR,CERAMIC 4700PF/50V B
C967	1-162-968-11	s	CAPACITOR,CERAMIC 4700PF/50V B
CN1	1-764-177-11	o	PIN, CONNECTOR (7P)(SMD)1.5MM
CN101	1-691-591-11	o	PIN, CONNECTOR (8P)(SMD)1.5MM
CN102	1-569-775-21	o	PIN, CONNECTOR 5P
CN201	1-760-388-11	o	CONNECTOR PIN (SMD)
CN202	1-691-551-11	o	PIN,CONNECTOR (SMD) (L TYPE)
CN301	1-764-441-21	s	CONNECTOR, FPC (30P)
CN302	1-764-441-21	s	CONNECTOR, FPC (30P)
CN303	1-764-441-21	s	CONNECTOR, FPC (30P)
CN304	1-695-209-21	s	PIN, CONNECTOR (PC BOARD) 15P
CN305	1-580-756-21	o	PIN, CONNECTOR 7P
CN401	1-573-290-21	s	PIN, CONNECTOR (4P)(SMD)1.5MM
CN601	1-573-768-21	o	PIN, CONNECTOR (5P)(SMD)1.5MM
CN602	1-573-290-21	s	PIN, CONNECTOR (4P)(SMD)1.5MM
CN701	1-695-320-21	s	PIN, CONNECTOR(1.5MM)SMD 2P
CN702	1 695 320 21	s	PIN, CONNECTOR(1.5MM)SMD 2P
CN703	1-695-320-21	s	PIN, CONNECTOR(1.5MM)SMD 2P
CN704	1-695-320-21	s	PIN, CONNECTOR(1.5MM)SMD 2P
CN705	1-573-290-21	s	PIN, CONNECTOR (4P)(SMD)(1.5MM
CN706	1-506-468-11	s	PIN, CONNECTOR 3P
CN801	1-766-383-11	o	PIN, CONNECTOR (12P)(SMD)1.5MM
CN901	1-766-383-11	o	PIN, CONNECTOR (12P)(SMD)1.5MM
D100	8-719-820-41	s	DIODE 1SS302
D101	8-719-820-41	s	DIODE 1SS302
D102	8-719-820-41	s	DIODE 1SS302
D103	8-719-938-72	s	DIODE SB01-05CP (RECTI)
D104	8-719-938-72	s	DIODE SB01-05CP (RECTI)
D106	8-719-820-41	s	DIODE 1SS302
D107	8-719-987-43	s	LED CL-150PG-CD
D108	8-719-987-41	s	LED CL-150Y-CD
D109	8-719-987-41	s	LED CL-150Y-CD
D200	8-719-024-81	s	DIODE 1SS300-TE85L
D201	8-719-987-43	s	LED CL-150PG-CD
D400	8-719-974-51	s	DIODE SB20-03P
D401	8-719-404-35	s	DIODE MA141WK
D402	8-719-404-35	s	DIODE MA141WK
D403	8-719-404-35	s	DIODE MA141WK
D404	8-719-106-53	s	DIODE RD10M-B2
D500	8-719-404-35	s	DIODE MA141WK
D501	8-719-404-35	s	DIODE MA141WK
D502	8-719-404-35	s	DIODE MA141WK
D503	8-719-404-35	s	DIODE MA141WK
D600	8-719-106-53	s	DIODE RD10M-B2
D601	8-719-048-17	s	DIODE MBRS130LT3
D602	8-719-048-17	s	DIODE MBRS130LT3
D603	8-719-106-88	s	DIODE RD15M-B1
D605	8-719-048-17	s	DIODE MBRS130LT3

(SV-194A BOARD)

Ref. No. or Q'ty	Part No.	SP	Description
D606	8-719-048-17	s	DIODE MBRS130LT3
D607	8-719-157-42	s	DIODE RD8.2M-B
D608	8-719-404-35	s	DIODE MA141WK
D609	8-719-404-35	s	DIODE MA141WK
D610	8-719-105-91	s	DIODE RD5.6M-B2
D611	8-719-404-35	s	DIODE MA141WK
D612	8-719-404-35	s	DIODE MA141WK
D613	8-719-820-41	s	DIODE 1SS302
D700	8-719-404-35	s	DIODE MA141WK
D702	8-719-048-17	s	DIODE MBRS130LT3
D950	8-719-820-41	s	DIODE 1SS302
D951	8-719-820-41	s	DIODE 1SS302
D952	8-719-820-41	s	DIODE 1SS302
D953	8-719-820-41	s	DIODE 1SS302
IC1	8-759-196-96	s	IC TC7SH08FU (TE85R)
IC100	8-759-530-05	s	IC TC4053BFT (EL.N)
IC101	8-759-337-40	s	IC NJM2904V(TE2)
IC102	8-759-523-00	s	IC TC74HC4051AFT(EL)
IC103	8-759-348-69	s	IC HD6415108RF10
IC104	8-759-081-48	s	IC TC74VHC08F
IC105	8-759-081-42	s	IC TC74VHC00F
IC106	8-759-530-05	s	IC TC4053BFT (EL.N)
IC107	8-759-545-80	s	IC LC3564BM-70-TLM
IC108	8-759-491-46	s	IC TC74VHCT04AFT (EL)
IC109	8-759-524-08	s	IC TC74VHC139FT(EL)
IC110	8-759-186-38	s	IC TC74VHC32F
IC111	8 759 545 80	s	IC LC3564BM 70 TLM
IC112	8-759-186-38	s	IC TC74VHC32F
IC113	8-759-523-78	s	IC TC74VHC00FT(EL)
IC114	8-759-645-42	s	IC SV194-IC114-SV-V3.20
IC115	8-759-523-81	s	IC TC74VHC08FT(EL)
IC116	8-752-381-84	s	IC CXD1095BQ
IC200	8-759-338-95	s	IC NJM2903V (TE2)
IC201	8-759-523-00	s	IC TC74HC4051AFT(EL)
IC202	8-759-523-96	s	IC TC74VHC86FT (EL)
IC203	8-759-530-05	s	IC TC4053BFT (EL.N)
IC204	8-759-009-51	s	IC MC14538BF
IC205	8-759-926-37	s	IC SN74HC193ANS
IC206	8-759-491-46	s	IC TC74VHCT04AFT (EL)
IC207	8-759-271-86	s	IC TC7SH04FU
IC209	8-752-343-05	s	IC CXD2202Q
IC210	8-759-523-95	s	IC TC74VHC74FT(EL)
IC212	8-752-897-72	o	IC CXP80P624AQ-1-010
IC213	8-759-174-16	s	IC TC74VHC244F
IC215	8-759-523-78	s	IC TC74VHC00FT(EL)
IC216	8-759-269-65	s	IC SN74HCT245ANS (E20)
IC300	8-759-973-43	s	IC MB8421-90LPFQ
IC301	8-759-391-30	s	IC 74LVX3245QSCX
IC302	8-759-391-30	s	IC 74LVX3245QSCX
IC303	8-759-391-30	s	IC 74LVX3245QSCX
IC304	8-752-381-84	s	IC CXD1095BQ
IC305	8-759-269-65	s	IC SN74HCT245ANS (E20)
IC306	8-759-523-84	s	IC TC74VHC14FT (EL)
IC400	8-759-338-95	s	IC NJM2903V (TE2)
IC401	8-759-463-91	s	IC UPD75106GF-J20-3BE
IC402	8-759-543-17	s	IC S-80833ALUP-EAX-T2
IC403	8-759-464-95	s	IC AK6420AF-E2
IC404	8-759-530-05	s	IC TC4053BFT (EL.N)
IC405	8-759-805-32	s	IC LA7205M

(SV-194A BOARD)

Ref. No. or Q'ty	Part No.	SP	Description
IC407	8-759-710-77	s	IC NJM4560MD
IC408	8-759-710-77	s	IC NJM4560MD
IC409	8-743-914-00	s	IC BX-3914(HYBRID)
IC411	8-759-530-05	s	IC TC4053BFT (EL.N)
IC412	8-759-523-78	s	IC TC74VHC00FT(EL)
IC500	8-759-635-27	s	IC M62352GP
IC501	8-759-337-40	s	IC NJM2904V(TE2)
IC502	8-759-337-41	s	IC NJM2902V (TE2)
IC503	8-759-338-95	s	IC NJM2903V (TE2)
IC504	8-759-338-95	s	IC NJM2903V (TE2)
IC505	8-759-338-95	s	IC NJM2903V (TE2)
IC600	8-759-388-63	s	IC NJU7064V (TE2)
IC601	8-759-338-95	s	IC NJM2903V (TE2)
IC602	8-759-276-89	s	IC BA6285FP (E2)
IC603	8-759-388-63	s	IC NJU7064V (TE2)
IC604	8-759-338-95	s	IC NJM2903V (TE2)
IC605	8-759-009-51	s	IC MC14538BF
IC606	8-759-337-40	s	IC NJM2904V(TE2)
IC700	8-759-440-71	s	IC NJM2119M (TE1)
IC701	8-759-388-63	s	IC NJU7064V (TE2)
IC702	8-759-388-62	s	IC NJU7062M (TE2)
IC703	8-759-530-05	s	IC TC4053BFT (EL.N)
IC704	8-759-338-95	s	IC NJM2903V (TE2)
IC705	8-759-388-62	s	IC NJU7062M (TE2)
IC706	8-759-710-77	s	IC NJM4560MD
IC707	8-759-530-05	s	IC TC4053BFT (EL.N)
IC708	8 759 388 62	s	IC NJU7062M (TE2)
IC709	8-759-082-61	s	IC TC4W53FU
IC710	8-759-440-71	s	IC NJM2119M (TE1)
IC711	8-759-082-61	s	IC TC4W53FU
IC712	8-759-489-87	s	IC BA6444FP
IC900	8-759-195-81	s	IC TC7S86FU
IC901	8-759-530-05	s	IC TC4053BFT (EL.N)
IC902	8-759-710-28	s	IC NJM4565M-A
IC903	8-759-338-95	s	IC NJM2903V (TE2)
IC904	8-759-082-61	s	IC TC4W53FU
L1	1-409-579-11	s	COIL, CHOKE 8.2UH
L2	1-409-579-11	s	COIL, CHOKE 8.2UH
L3	1-409-579-11	s	COIL, CHOKE 8.2UH
L4	1-409-579-11	s	COIL, CHOKE 8.2UH
L5	1-409-579-11	s	COIL, CHOKE 8.2UH
L400	1-410-393-11	s	CHIP INDUCTOR 100UH (3225)
L401	1-410-393-11	s	CHIP INDUCTOR 100UH (3225)
L500	1-410-381-11	s	CHIP INDUCTOR 10UH (3225)
L501	1-410-381-11	s	CHIP INDUCTOR 10UH (3225)
L600	1-409-579-11	s	COIL, CHOKE 8.2UH
L601	1-416-617-11	s	COIL, CHOKE 100UH
L602	1-411-755-11	s	COIL, CHOKE 47UH
L603	1-411-755-11	s	COIL, CHOKE 47UH
L604	1-410-381-11	s	CHIP INDUCTOR 10UH (3225)
L605	1-409-579-11	s	COIL, CHOKE 8.2UH
L606	1-409-722-11	s	COIL, CHOKE 220UH
L700	1-409-579-11	s	COIL, CHOKE 8.2UH
L701	1-409-722-11	s	COIL, CHOKE 220UH
L950	1-411-755-11	s	COIL, CHOKE 47UH
L951	1-411-755-11	s	COIL, CHOKE 47UH
LV950	1-414-007-11	s	COIL, VARIABLE

(SV-194A BOARD)

Ref. No. or Q'ty	Part No.	SP	Description
M3	3-611-385-01	o	PIN,DETECTION
M4	3-611-405-01	o	SPRING,COMPRESSION
M4	4-963-480-01	s	SPRING(DOOR),COMPRESSION
PH300	8-749-010-00	s	PHOTO INTERRUPTER GP1S33
PH301	8-719-988-15	s	PHOTO REFRECTOR PR-11-C
PH302	8-719-988-15	s	PHOTO REFRECTOR PR-11-C
PH303	8-719-988-15	s	PHOTO REFRECTOR PR-11-C
PH304	8-719-988-15	s	PHOTO REFRECTOR PR-11-C
PH500	8-719-939-23	s	PHOTO SENSOR GP2S09C
PH501	8-719-939-23	s	PHOTO SENSOR GP2S09C
Q1	8-729-040-75	s	TRANSISTOR SI4953DY
Q2	8-729-029-14	s	TRANSISTOR DTC144EUA-T106
Q300	8-729-117-32	s	TRANSISTOR 2SC4177
Q301	8-729-117-32	s	TRANSISTOR 2SC4177
Q302	8-729-117-32	s	TRANSISTOR 2SC4177
Q303	8-729-117-32	s	TRANSISTOR 2SC4177
Q304	8-729-117-32	s	TRANSISTOR 2SC4177
Q400	8-729-117-32	s	TRANSISTOR 2SC4177
Q401	8-729-140-63	s	TRANSISTOR 2SA1611-M5M6
Q402	8-729-029-14	s	TRANSISTOR DTC144EUA-T106
Q403	8-729-029-14	s	TRANSISTOR DTC144EUA-T106
Q404	8-729-029-14	s	TRANSISTOR DTC144EUA-T106
Q405	8-729-140-63	s	TRANSISTOR 2SA1611-M5M6
Q406	8-729-140-63	s	TRANSISTOR 2SA1611-M5M6
Q407	8-729-013-37	s	TRANSISTOR 2SC4213-AB-TE85L
Q500	8 729 117 32	s	TRANSISTOR 2SC4177
Q501	8-729-117-32	s	TRANSISTOR 2SC4177
Q600	8-729-040-75	s	TRANSISTOR SI4953DY
Q601	8-729-029-14	s	TRANSISTOR DTC144EUA-T106
Q602	8-729-117-32	s	TRANSISTOR 2SC4177
Q603	8-729-140-63	s	TRANSISTOR 2SA1611-M5M6
Q604	8-729-117-32	s	TRANSISTOR 2SC4177
Q605	8-729-109-44	s	TRANSISTOR 2SK94
Q606	8-729-117-32	s	TRANSISTOR 2SC4177
Q607	8-729-140-63	s	TRANSISTOR 2SA1611-M5M6
Q608	8-729-120-22	s	TRANSISTOR 2SD1614-T1XK
Q609	8-729-029-14	s	TRANSISTOR DTC144EUA-T106
Q610	8-729-117-32	s	TRANSISTOR 2SC4177
Q611	8-729-140-63	s	TRANSISTOR 2SA1611-M5M6
Q612	8-729-040-75	s	TRANSISTOR SI4953DY
Q613	8-729-140-63	s	TRANSISTOR 2SA1611-M5M6
Q614	8-729-109-44	s	TRANSISTOR 2SK94
Q615	8-729-024-45	s	TRANSISTOR 2SK2315TY
Q616	8-729-120-22	s	TRANSISTOR 2SD1614-T1XK
Q617	8-729-117-32	s	TRANSISTOR 2SC4177
Q618	8-729-117-32	s	TRANSISTOR 2SC4177
Q619	8-729-024-50	s	TRANSISTOR SI9936DY
Q621	8-729-043-74	s	TRANSISTOR SI4435DY-T1-REVA
Q622	8-729-117-32	s	TRANSISTOR 2SC4177
Q700	8-729-140-63	s	TRANSISTOR 2SA1611-M5M6
Q701	8-729-013-37	s	TRANSISTOR 2SC4213-AB-TE85L
Q702	8-729-029-14	s	TRANSISTOR DTC144EUA-T106
Q703	8-729-029-14	s	TRANSISTOR DTC144EUA-T106
Q704	8-729-028-91	s	TRANSISTOR DTA144EUA-T106
Q705	8-729-117-32	s	TRANSISTOR 2SC4177
Q706	8-729-117-32	s	TRANSISTOR 2SC4177
Q707	8-729-140-63	s	TRANSISTOR 2SA1611-M5M6
Q708	8-729-040-75	s	TRANSISTOR SI4953DY

(SV-194A BOARD)

Ref. No. or Q'ty	Part No.	SP	Description
Q709	8-729-140-63	s	TRANSISTOR 2SA1611-M5M6
Q710	8-729-120-22	s	TRANSISTOR 2SD1614-T1XK
Q711	8-729-029-14	s	TRANSISTOR DTC144EUA-T106
Q712	8-729-029-14	s	TRANSISTOR DTC144EUA-T106
Q900	8-729-117-32	s	TRANSISTOR 2SC4177
Q901	8-729-140-63	s	TRANSISTOR 2SA1611-M5M6
Q950	8-729-028-91	s	TRANSISTOR DTA144EUA-T106
Q951	8-729-029-14	s	TRANSISTOR DTC144EUA-T106
Q952	8-729-824-34	s	TRANSISTOR 2SJ187
Q953	8-729-013-37	s	TRANSISTOR 2SC4213-AB-TE85L
Q954	8-729-013-37	s	TRANSISTOR 2SC4213-AB-TE85L
Q955	8-729-028-91	s	TRANSISTOR DTA144EUA-T106
Q956	8-729-029-14	s	TRANSISTOR DTC144EUA-T106
Q957	8-729-824-34	s	TRANSISTOR 2SJ187
Q958	8-729-141-75	s	TRANSISTOR 2SD596DV345
Q959	8-729-141-75	s	TRANSISTOR 2SD596DV345
R1	1-216-863-11	s	RESISTOR,CHIP 3.3M 1/16W 1608
R4	1-216-864-11	s	RESISTOR,CHIP 0 1/16W (1608)
R5	1-216-864-11	s	RESISTOR,CHIP 0 1/16W (1608)
R6	1-218-692-11	s	RESISTOR,CHIP 1.0K 1/16W(1608)
R7	1-218-740-11	s	RESISTOR,CHIP 100K 1/16W(1608)
R8	1-218-740-11	s	RESISTOR,CHIP 100K 1/16W(1608)
R10	1-216-864-11	s	RESISTOR,CHIP 0 1/16W (1608)
R11	1-216-864-11	s	RESISTOR,CHIP 0 1/16W (1608)
R12	1-216-864-11	s	RESISTOR,CHIP 0 1/16W (1608)
R13	1-216-864-11	s	RESISTOR,CHIP 0 1/16W (1608)
R14	1-216-864-11	s	RESISTOR,CHIP 0 1/16W (1608)
R15	1-216-864-11	s	RESISTOR,CHIP 0 1/16W (1608)
R16	1-216-864-11	s	RESISTOR,CHIP 0 1/16W (1608)
R17	1-216-864-11	s	RESISTOR,CHIP 0 1/16W (1608)
R18	1-216-864-11	s	RESISTOR,CHIP 0 1/16W (1608)
R100	1-218-740-11	s	RESISTOR,CHIP 100K 1/16W(1608)
R101	1-218-740-11	s	RESISTOR,CHIP 100K 1/16W(1608)
R102	1-218-716-11	s	RESISTOR,CHIP 10K 1/16W(1608)
R103	1-218-716-11	s	RESISTOR,CHIP 10K 1/16W(1608)
R104	1-218-708-11	s	RESISTOR,CHIP 4.7K 1/16W(1608)
R105	1-218-728-11	s	RESISTOR,METAL 33K 1/16W
R106	1-218-708-11	s	RESISTOR,CHIP 4.7K 1/16W(1608)
R107	1-218-752-11	s	RESISTOR,CHIP 330K 1/16W(1608)
R108	1-218-716-11	s	RESISTOR,CHIP 10K 1/16W(1608)
R109	1-218-716-11	s	RESISTOR,CHIP 10K 1/16W(1608)
R110	1-218-716-11	s	RESISTOR,CHIP 10K 1/16W(1608)
R111	1-218-716-11	s	RESISTOR,CHIP 10K 1/16W(1608)
R112	1-218-716-11	s	RESISTOR,CHIP 10K 1/16W(1608)
R113	1-218-732-11	s	RESISTOR,CHIP 47K 1/16W(1608)
R114	1-218-732-11	s	RESISTOR,CHIP 47K 1/16W(1608)
R115	1-218-716-11	s	RESISTOR,CHIP 10K 1/16W(1608)
R116	1-218-732-11	s	RESISTOR,CHIP 47K 1/16W(1608)
R117	1-218-700-11	s	RESISTOR,CHIP 2.2K 1/16W(1608)
R118	1-218-716-11	s	RESISTOR,CHIP 10K 1/16W(1608)
R119	1-218-732-11	s	RESISTOR,CHIP 47K 1/16W(1608)
R120	1-218-692-11	s	RESISTOR,CHIP 1.0K 1/16W(1608)
R121	1-218-732-11	s	RESISTOR,CHIP 47K 1/16W(1608)
R122	1-218-732-11	s	RESISTOR,CHIP 47K 1/16W(1608)
R123	1-218-732-11	s	RESISTOR,CHIP 47K 1/16W(1608)
R124	1-218-692-11	s	RESISTOR,CHIP 1.0K 1/16W(1608)
R125	1-216-864-11	s	RESISTOR,CHIP 0 1/16W (1608)
R126	1-218-716-11	s	RESISTOR,CHIP 10K 1/16W(1608)

(SV-194A BOARD)

Ref. No. or Q'ty	Part No.	SP	Description
R127	1-218-716-11	s	RESISTOR,CHIP 10K 1/16W(1608)
R130	1-216-864-11	s	RESISTOR,CHIP 0 1/16W (1608)
R131	1-216-864-11	s	RESISTOR,CHIP 0 1/16W (1608)
R132	1-218-692-11	s	RESISTOR,CHIP 1.0K 1/16W(1608)
R133	1-218-716-11	s	RESISTOR,CHIP 10K 1/16W(1608)
R134	1-218-716-11	s	RESISTOR,CHIP 10K 1/16W(1608)
R135	1-218-732-11	s	RESISTOR,CHIP 47K 1/16W(1608)
R136	1-218-716-11	s	RESISTOR,CHIP 10K 1/16W(1608)
R137	1-218-716-11	s	RESISTOR,CHIP 10K 1/16W(1608)
R138	1-218-716-11	s	RESISTOR,CHIP 10K 1/16W(1608)
R139	1-218-716-11	s	RESISTOR,CHIP 10K 1/16W(1608)
R140	1-218-668-11	s	RESISTOR,CHIP 100 1/16W (1608)
R141	1-218-668-11	s	RESISTOR,CHIP 100 1/16W (1608)
R142	1-218-716-11	s	RESISTOR,CHIP 10K 1/16W(1608)
R143	1-218-700-11	s	RESISTOR,CHIP 2.2K 1/16W(1608)
R144	1-218-700-11	s	RESISTOR,CHIP 2.2K 1/16W(1608)
R145	1-218-732-11	s	RESISTOR,CHIP 47K 1/16W(1608)
R146	1-218-716-11	s	RESISTOR,CHIP 10K 1/16W(1608)
R147	1-218-716-11	s	RESISTOR,CHIP 10K 1/16W(1608)
R148	1-218-692-11	s	RESISTOR,CHIP 1.0K 1/16W(1608)
R149	1-218-732-11	s	RESISTOR,CHIP 47K 1/16W(1608)
R150	1-218-716-11	s	RESISTOR,CHIP 10K 1/16W(1608)
R151	1-218-692-11	s	RESISTOR,CHIP 1.0K 1/16W(1608)
R153	1-218-716-11	s	RESISTOR,CHIP 10K 1/16W(1608)
R154	1-218-732-11	s	RESISTOR,CHIP 47K 1/16W(1608)
R156	1-218-716-11	s	RESISTOR,CHIP 10K 1/16W(1608)
R157	1-218-732-11	s	RESISTOR,CHIP 47K 1/16W(1608)
R200	1-218-740-11	s	RESISTOR,CHIP 100K 1/16W(1608)
R201	1-216-864-11	s	RESISTOR,CHIP 0 1/16W (1608)
R202	1-216-864-11	s	RESISTOR,CHIP 0 1/16W (1608)
R203	1-218-716-11	s	RESISTOR,CHIP 10K 1/16W(1608)
R204	1-218-668-11	s	RESISTOR,CHIP 100 1/16W (1608)
R205	1-218-716-11	s	RESISTOR,CHIP 10K 1/16W(1608)
R206	1-218-716-11	s	RESISTOR,CHIP 10K 1/16W(1608)
R207	1-218-716-11	s	RESISTOR,CHIP 10K 1/16W(1608)
R208	1-218-716-11	s	RESISTOR,CHIP 10K 1/16W(1608)
R209	1-218-700-11	s	RESISTOR,CHIP 2.2K 1/16W(1608)
R210	1-218-724-11	s	RESISTOR,CHIP 22K 1/16W(1608)
R211	1-218-724-11	s	RESISTOR,CHIP 22K 1/16W(1608)
R212	1-218-700-11	s	RESISTOR,CHIP 2.2K 1/16W(1608)
R213	1-218-740-11	s	RESISTOR,CHIP 100K 1/16W(1608)
R214	1-218-740-11	s	RESISTOR,CHIP 100K 1/16W(1608)
R215	1-216-864-11	s	RESISTOR,CHIP 0 1/16W (1608)
R216	1-218-716-11	s	RESISTOR,CHIP 10K 1/16W(1608)
R217	1-218-716-11	s	RESISTOR,CHIP 10K 1/16W(1608)
R218	1-216-864-11	s	RESISTOR,CHIP 0 1/16W (1608)
R219	1-216-864-11	s	RESISTOR,CHIP 0 1/16W (1608)
R220	1-218-752-11	s	RESISTOR,CHIP 330K 1/16W(1608)
R221	1-218-740-11	s	RESISTOR,CHIP 100K 1/16W(1608)
R222	1-218-700-11	s	RESISTOR,CHIP 2.2K 1/16W(1608)
R223	1-218-700-11	s	RESISTOR,CHIP 2.2K 1/16W(1608)
R224	1-216-864-11	s	RESISTOR,CHIP 0 1/16W (1608)
R225	1-216-864-11	s	RESISTOR,CHIP 0 1/16W (1608)
R226	1-218-692-11	s	RESISTOR,CHIP 1.0K 1/16W(1608)
R227	1-218-692-11	s	RESISTOR,CHIP 1.0K 1/16W(1608)
R228	1-218-668-11	s	RESISTOR,CHIP 100 1/16W (1608)
R229	1-218-748-11	s	RESISTOR,CHIP 220K 1/16W(1608)
R230	1-218-748-11	s	RESISTOR,CHIP 220K 1/16W(1608)
R231	1-218-740-11	s	RESISTOR,CHIP 100K 1/16W(1608)

(SV-194A BOARD)

Ref. No. or Q'ty	Part No.	SP	Description
R232	1-218-728-11	s	RESISTOR,METAL 33K 1/16W
R233	1-218-668-11	s	RESISTOR,CHIP 100 1/16W (1608)
R234	1-218-724-11	s	RESISTOR,CHIP 22K 1/16W(1608)
R235	1-218-668-11	s	RESISTOR,CHIP 100 1/16W (1608)
R236	1-218-724-11	s	RESISTOR,CHIP 22K 1/16W(1608)
R237	1-216-864-11	s	RESISTOR,CHIP 0 1/16W (1608)
R239	1-218-692-11	s	RESISTOR,CHIP 1.0K 1/16W(1608)
R256	1-218-724-11	s	RESISTOR,CHIP 22K 1/16W(1608)
R257	1-218-716-11	s	RESISTOR,CHIP 10K 1/16W(1608)
R258	1-218-716-11	s	RESISTOR,CHIP 10K 1/16W(1608)
R259	1-218-716-11	s	RESISTOR,CHIP 10K 1/16W(1608)
R260	1-218-716-11	s	RESISTOR,CHIP 10K 1/16W(1608)
R261	1-218-716-11	s	RESISTOR,CHIP 10K 1/16W(1608)
R262	1-218-716-11	s	RESISTOR,CHIP 10K 1/16W(1608)
R263	1-218-716-11	s	RESISTOR,CHIP 10K 1/16W(1608)
R264	1-218-716-11	s	RESISTOR,CHIP 10K 1/16W(1608)
R265	1-218-700-11	s	RESISTOR,CHIP 2.2K 1/16W(1608)
R266	1-218-692-11	s	RESISTOR,CHIP 1.0K 1/16W(1608)
R267	1-218-692-11	s	RESISTOR,CHIP 1.0K 1/16W(1608)
R268	1-218-692-11	s	RESISTOR,CHIP 1.0K 1/16W(1608)
R269	1-218-692-11	s	RESISTOR,CHIP 1.0K 1/16W(1608)
R270	1-218-716-11	s	RESISTOR,CHIP 10K 1/16W(1608)
R271	1-218-716-11	s	RESISTOR,CHIP 10K 1/16W(1608)
R272	1-218-716-11	s	RESISTOR,CHIP 10K 1/16W(1608)
R273	1-218-716-11	s	RESISTOR,CHIP 10K 1/16W(1608)
R274	1-218-716-11	s	RESISTOR,CHIP 10K 1/16W(1608)
R275	1 218 716 11	s	RESISTOR,CHIP 10K 1/16W(1608)
R276	1-218-716-11	s	RESISTOR,CHIP 10K 1/16W(1608)
R277	1-216-864-11	s	RESISTOR,CHIP 0 1/16W (1608)
R279	1-218-692-11	s	RESISTOR,CHIP 1.0K 1/16W(1608)
R300	1-218-732-11	s	RESISTOR,CHIP 47K 1/16W(1608)
R301	1-216-864-11	s	RESISTOR,CHIP 0 1/16W (1608)
R302	1-216-864-11	s	RESISTOR,CHIP 0 1/16W (1608)
R303	1-216-864-11	s	RESISTOR,CHIP 0 1/16W (1608)
R304	1-216-864-11	s	RESISTOR,CHIP 0 1/16W (1608)
R305	1-216-864-11	s	RESISTOR,CHIP 0 1/16W (1608)
R306	1-216-864-11	s	RESISTOR,CHIP 0 1/16W (1608)
R307	1-216-864-11	s	RESISTOR,CHIP 0 1/16W (1608)
R308	1-216-864-11	s	RESISTOR,CHIP 0 1/16W (1608)
R309	1-216-864-11	s	RESISTOR,CHIP 0 1/16W (1608)
R310	1-216-864-11	s	RESISTOR,CHIP 0 1/16W (1608)
R311	1-216-864-11	s	RESISTOR,CHIP 0 1/16W (1608)
R312	1-216-864-11	s	RESISTOR,CHIP 0 1/16W (1608)
R313	1-216-864-11	s	RESISTOR,CHIP 0 1/16W (1608)
R314	1-216-864-11	s	RESISTOR,CHIP 0 1/16W (1608)
R315	1-218-684-11	s	RESISTOR CHIP 470 1/16W (1608)
R316	1-216-864-11	s	RESISTOR,CHIP 0 1/16W (1608)
R317	1-216-864-11	s	RESISTOR,CHIP 0 1/16W (1608)
R318	1-216-864-11	s	RESISTOR,CHIP 0 1/16W (1608)
R319	1-216-864-11	s	RESISTOR,CHIP 0 1/16W (1608)
R320	1-216-864-11	s	RESISTOR,CHIP 0 1/16W (1608)
R321	1-216-864-11	s	RESISTOR,CHIP 0 1/16W (1608)
R322	1-216-864-11	s	RESISTOR,CHIP 0 1/16W (1608)
R323	1-216-864-11	s	RESISTOR,CHIP 0 1/16W (1608)
R324	1-216-864-11	s	RESISTOR,CHIP 0 1/16W (1608)
R325	1-218-732-11	s	RESISTOR,CHIP 47K 1/16W(1608)
R326	1-218-732-11	s	RESISTOR,CHIP 47K 1/16W(1608)
R327	1-218-732-11	s	RESISTOR,CHIP 47K 1/16W(1608)
R328	1-218-716-11	s	RESISTOR,CHIP 10K 1/16W(1608)

(SV-194A BOARD)

Ref. No. or Q'ty	Part No.	SP	Description
R329	1-218-716-11	s	RESISTOR,CHIP 10K 1/16W(1608)
R330	1-218-684-11	s	RESISTOR CHIP 470 1/16W (1608)
R331	1-218-692-11	s	RESISTOR,CHIP 1.0K 1/16W(1608)
R332	1-216-864-11	s	RESISTOR,CHIP 0 1/16W (1608)
R333	1-216-864-11	s	RESISTOR,CHIP 0 1/16W (1608)
R334	1-218-694-11	s	RESISTOR CHIP 1.2K1/16W(1608)
R335	1-218-740-11	s	RESISTOR,CHIP 100K 1/16W(1608)
R336	1-218-740-11	s	RESISTOR,CHIP 100K 1/16W(1608)
R337	1-218-740-11	s	RESISTOR,CHIP 100K 1/16W(1608)
R338	1-218-740-11	s	RESISTOR,CHIP 100K 1/16W(1608)
R339	1-218-752-11	s	RESISTOR,CHIP 330K 1/16W(1608)
R340	1-218-740-11	s	RESISTOR,CHIP 100K 1/16W(1608)
R341	1-218-740-11	s	RESISTOR,CHIP 100K 1/16W(1608)
R342	1-218-740-11	s	RESISTOR,CHIP 100K 1/16W(1608)
R343	1-218-740-11	s	RESISTOR,CHIP 100K 1/16W(1608)
R344	1-218-748-11	s	RESISTOR,CHIP 220K 1/16W(1608)
R345	1-218-732-11	s	RESISTOR,CHIP 47K 1/16W(1608)
R346	1-216-864-11	s	RESISTOR,CHIP 0 1/16W (1608)
R347	1-218-732-11	s	RESISTOR,CHIP 47K 1/16W(1608)
R348	1-218-732-11	s	RESISTOR,CHIP 47K 1/16W(1608)
R349	1-218-732-11	s	RESISTOR,CHIP 47K 1/16W(1608)
R350	1-218-732-11	s	RESISTOR,CHIP 47K 1/16W(1608)
R351	1-218-676-11	s	RESISTOR,CHIP 220 1/16W(1608)
R352	1-218-676-11	s	RESISTOR,CHIP 220 1/16W(1608)
R353	1-218-668-11	s	RESISTOR,CHIP 100 1/16W (1608)
R354	1-218-668-11	s	RESISTOR,CHIP 100 1/16W (1608)
R400	1 218 708 11	s	RESISTOR,CHIP 4.7K 1/16W(1608)
R401	1-218-712-11	s	RESISTOR,METAL 6.8K 1/16W
R402	1-218-690-11	s	RESISTOR CHIP 820 1/16W (1608)
R403	1-218-730-11	s	RESISTOR METAL FILM CHIP 39K
R404	1-218-708-11	s	RESISTOR,CHIP 4.7K 1/16W(1608)
R405	1-218-744-11	s	RESISTOR,METAL 150K 1/16
R406	1-216-853-11	s	RESISTOR,CHIP 470K 1/16W(1608)
R407	1-218-716-11	s	RESISTOR,CHIP 10K 1/16W(1608)
R408	1-218-732-11	s	RESISTOR,CHIP 47K 1/16W(1608)
R409	1-218-732-11	s	RESISTOR,CHIP 47K 1/16W(1608)
R410	1-218-732-11	s	RESISTOR,CHIP 47K 1/16W(1608)
R413	1-218-732-11	s	RESISTOR,CHIP 47K 1/16W(1608)
R414	1-218-732-11	s	RESISTOR,CHIP 47K 1/16W(1608)
R415	1-218-716-11	s	RESISTOR,CHIP 10K 1/16W(1608)
R416	1-218-740-11	s	RESISTOR,CHIP 100K 1/16W(1608)
R417	1-218-740-11	s	RESISTOR,CHIP 100K 1/16W(1608)
R418	1-218-716-11	s	RESISTOR,CHIP 10K 1/16W(1608)
R419	1-218-732-11	s	RESISTOR,CHIP 47K 1/16W(1608)
R421	1-218-716-11	s	RESISTOR,CHIP 10K 1/16W(1608)
R422	1-218-716-11	s	RESISTOR,CHIP 10K 1/16W(1608)
R423	1-218-740-11	s	RESISTOR,CHIP 100K 1/16W(1608)
R424	1-218-687-11	s	RESISTOR CHIP 620 1/16W (1608)
R425	1-218-708-11	s	RESISTOR,CHIP 4.7K 1/16W(1608)
R426	1-218-716-11	s	RESISTOR,CHIP 10K 1/16W(1608)
R427	1-218-716-11	s	RESISTOR,CHIP 10K 1/16W(1608)
R428	1-218-732-11	s	RESISTOR,CHIP 47K 1/16W(1608)
R429	1-218-730-11	s	RESISTOR METAL FILM CHIP 39K
R430	1-218-708-11	s	RESISTOR,CHIP 4.7K 1/16W(1608)
R431	1-218-726-11	s	RESISTOR CHIP 27K 1/16W (1608)
R432	1-218-732-11	s	RESISTOR,CHIP 47K 1/16W(1608)
R433	1-218-732-11	s	RESISTOR,CHIP 47K 1/16W(1608)
R434	1-218-732-11	s	RESISTOR,CHIP 47K 1/16W(1608)
R435	1-218-724-11	s	RESISTOR,CHIP 22K 1/16W(1608)

(SV-194A BOARD)

Ref. No. or Q'ty	Part No.	SP	Description
R436	1-218-732-11	s	RESISTOR,CHIP 47K 1/16W(1608)
R437	1-218-693-11	s	RESISTOR,CHIP 1.1K 1/16W(1608)
R438	1-216-857-11	s	RESISTOR,CHIP 1.0M 1/16W 1608
R439	1-218-716-11	s	RESISTOR,CHIP 10K 1/16W(1608)
R440	1-218-740-11	s	RESISTOR,CHIP 100K 1/16W(1608)
R441	1-216-857-11	s	RESISTOR,CHIP 1.0M 1/16W 1608
R442	1-218-716-11	s	RESISTOR,CHIP 10K 1/16W(1608)
R443	1-218-716-11	s	RESISTOR,CHIP 10K 1/16W(1608)
R444	1-218-676-11	s	RESISTOR,CHIP 220 1/16W(1608)
R445	1-218-718-11	s	RESISTOR CHIP 12K 1/16W (1608)
R446	1-218-716-11	s	RESISTOR,CHIP 10K 1/16W(1608)
R447	1-216-863-11	s	RESISTOR,CHIP 3.3M 1/16W 1608
R448	1-218-716-11	s	RESISTOR,CHIP 10K 1/16W(1608)
R449	1-218-716-11	s	RESISTOR,CHIP 10K 1/16W(1608)
R450	1-218-712-11	s	RESISTOR,METAL 6.8K 1/16W
R451	1-218-708-11	s	RESISTOR,CHIP 4.7K 1/16W(1608)
R452	1-218-692-11	s	RESISTOR,CHIP 1.0K 1/16W(1608)
R500	1-218-732-11	s	RESISTOR,CHIP 47K 1/16W(1608)
R502	1-218-716-11	s	RESISTOR,CHIP 10K 1/16W(1608)
R503	1-218-716-11	s	RESISTOR,CHIP 10K 1/16W(1608)
R504	1-218-724-11	s	RESISTOR,CHIP 22K 1/16W(1608)
R505	1-218-724-11	s	RESISTOR,CHIP 22K 1/16W(1608)
R506	1-218-736-11	s	RESISTOR,CHIP 68K 1/16W(1608)
R507	1-218-736-11	s	RESISTOR,CHIP 68K 1/16W(1608)
R508	1-218-710-11	s	RESISTOR,CHIP 5.6K 1/16W(1608)
R509	1-218-736-11	s	RESISTOR,CHIP 68K 1/16W(1608)
R510	1-218-736-11	s	RESISTOR,CHIP 68K 1/16W(1608)
R511	1-218-732-11	s	RESISTOR,CHIP 47K 1/16W(1608)
R512	1-218-740-11	s	RESISTOR,CHIP 100K 1/16W(1608)
R513	1-218-740-11	s	RESISTOR,CHIP 100K 1/16W(1608)
R514	1-218-728-11	s	RESISTOR,METAL 33K 1/16W
R515	1-218-716-11	s	RESISTOR,CHIP 10K 1/16W(1608)
R517	1-216-857-11	s	RESISTOR,CHIP 1.0M 1/16W 1608
R518	1-218-716-11	s	RESISTOR,CHIP 10K 1/16W(1608)
R519	1-218-716-11	s	RESISTOR,CHIP 10K 1/16W(1608)
R520	1-218-724-11	s	RESISTOR,CHIP 22K 1/16W(1608)
R521	1-218-724-11	s	RESISTOR,CHIP 22K 1/16W(1608)
R522	1-218-724-11	s	RESISTOR,CHIP 22K 1/16W(1608)
R523	1-218-724-11	s	RESISTOR,CHIP 22K 1/16W(1608)
R524	1-218-740-11	s	RESISTOR,CHIP 100K 1/16W(1608)
R525	1-218-716-11	s	RESISTOR,CHIP 10K 1/16W(1608)
R526	1-218-736-11	s	RESISTOR,CHIP 68K 1/16W(1608)
R527	1-218-736-11	s	RESISTOR,CHIP 68K 1/16W(1608)
R528	1-218-736-11	s	RESISTOR,CHIP 68K 1/16W(1608)
R529	1-218-736-11	s	RESISTOR,CHIP 68K 1/16W(1608)
R530	1-218-716-11	s	RESISTOR,CHIP 10K 1/16W(1608)
R531	1-218-700-11	s	RESISTOR,CHIP 2.2K 1/16W(1608)
R532	1-218-710-11	s	RESISTOR,CHIP 5.6K 1/16W(1608)
R533	1-218-716-11	s	RESISTOR,CHIP 10K 1/16W(1608)
R534	1-218-740-11	s	RESISTOR,CHIP 100K 1/16W(1608)
R535	1-218-716-11	s	RESISTOR,CHIP 10K 1/16W(1608)
R536	1-218-740-11	s	RESISTOR,CHIP 100K 1/16W(1608)
R537	1-218-728-11	s	RESISTOR,METAL 33K 1/16W
R538	1-218-724-11	s	RESISTOR,CHIP 22K 1/16W(1608)
R539	1-218-724-11	s	RESISTOR,CHIP 22K 1/16W(1608)
R540	1-216-857-11	s	RESISTOR,CHIP 1.0M 1/16W 1608
R541	1-218-740-11	s	RESISTOR,CHIP 100K 1/16W(1608)
R542	1-218-716-11	s	RESISTOR,CHIP 10K 1/16W(1608)
R543	1-218-700-11	s	RESISTOR,CHIP 2.2K 1/16W(1608)

(SV-194A BOARD)

Ref. No. or Q'ty	Part No.	SP	Description
R544	1-218-732-11	s	RESISTOR,CHIP 47K 1/16W(1608)
R545	1-218-724-11	s	RESISTOR,CHIP 22K 1/16W(1608)
R546	1-218-724-11	s	RESISTOR,CHIP 22K 1/16W(1608)
R547	1-218-707-11	s	RESISTOR,CHIP 4.3K 1/16W(1608)
R548	1-216-857-11	s	RESISTOR,CHIP 1.0M 1/16W 1608
R549	1-218-689-11	s	RESISTOR CHIP 750 1/16W (1608)
R551	1-218-700-11	s	RESISTOR,CHIP 2.2K 1/16W(1608)
R552	1-218-752-11	s	RESISTOR,CHIP 330K 1/16W(1608)
R554	1-218-752-11	s	RESISTOR,CHIP 330K 1/16W(1608)
R556	1-218-716-11	s	RESISTOR,CHIP 10K 1/16W(1608)
R557	1-218-716-11	s	RESISTOR,CHIP 10K 1/16W(1608)
R558	1-218-732-11	s	RESISTOR,CHIP 47K 1/16W(1608)
R559	1-218-724-11	s	RESISTOR,CHIP 22K 1/16W(1608)
R560	1-218-724-11	s	RESISTOR,CHIP 22K 1/16W(1608)
R561	1-218-707-11	s	RESISTOR,CHIP 4.3K 1/16W(1608)
R562	1-216-857-11	s	RESISTOR,CHIP 1.0M 1/16W 1608
R563	1-218-700-11	s	RESISTOR,CHIP 2.2K 1/16W(1608)
R565	1-216-854-11	s	RESISTOR,CHIP 560K 1/16W
R566	1-218-716-11	s	RESISTOR,CHIP 10K 1/16W(1608)
R567	1-218-716-11	s	RESISTOR,CHIP 10K 1/16W(1608)
R568	1-216-854-11	s	RESISTOR,CHIP 560K 1/16W
R600	1-218-732-11	s	RESISTOR,CHIP 47K 1/16W(1608)
R601	1-218-732-11	s	RESISTOR,CHIP 47K 1/16W(1608)
R602	1-218-732-11	s	RESISTOR,CHIP 47K 1/16W(1608)
R603	1-218-720-11	s	RESISTOR,CHIP 15K 1/16W(1608)
R604	1-216-864-11	s	RESISTOR,CHIP 0 1/16W (1608)
R605	1-218-724-11	s	RESISTOR,CHIP 22K 1/16W(1608)
R606	1-218-734-11	s	RESISTOR,CHIP 56K 1/16W(1608)
R607	1-218-724-11	s	RESISTOR,CHIP 22K 1/16W(1608)
R608	1-216-853-11	s	RESISTOR,CHIP 470K 1/16W(1608)
R609	1-216-854-11	s	RESISTOR,CHIP 560K 1/16W
R610	1-216-854-11	s	RESISTOR,CHIP 560K 1/16W
R611	1-218-708-11	s	RESISTOR,CHIP 4.7K 1/16W(1608)
R612	1-218-732-11	s	RESISTOR,CHIP 47K 1/16W(1608)
R613	1-218-724-11	s	RESISTOR,CHIP 22K 1/16W(1608)
R614	1-218-716-11	s	RESISTOR,CHIP 10K 1/16W(1608)
R615	1-218-700-11	s	RESISTOR,CHIP 2.2K 1/16W(1608)
R616	1-218-236-91	s	RESISTOR,CHIP 1.0
R617	1-218-700-11	s	RESISTOR,CHIP 2.2K 1/16W(1608)
R618	1-218-716-11	s	RESISTOR,CHIP 10K 1/16W(1608)
R619	1-218-716-11	s	RESISTOR,CHIP 10K 1/16W(1608)
R620	1-218-644-11	s	RESISTOR,METAL 10 1/16W
R621	1-218-736-11	s	RESISTOR,CHIP 68K 1/16W(1608)
R622	1-218-704-11	s	RESISTOR,CHIP 3.3K 1/16W(1608)
R623	1-218-704-11	s	RESISTOR,CHIP 3.3K 1/16W(1608)
R624	1-218-736-11	s	RESISTOR,CHIP 68K 1/16W(1608)
R625	1-218-676-11	s	RESISTOR,CHIP 220 1/16W(1608)
R626	1-218-676-11	s	RESISTOR,CHIP 220 1/16W(1608)
R627	1-218-726-11	s	RESISTOR CHIP 27K 1/16W (1608)
R628	1-218-726-11	s	RESISTOR CHIP 27K 1/16W (1608)
R629	1-218-692-11	s	RESISTOR,CHIP 1.0K 1/16W(1608)
R630	1-218-231-11	s	RESISTOR,CHIP 1 1/2W (4532)
R631	1-218-231-11	s	RESISTOR,CHIP 1 1/2W (4532)
R632	1-218-700-11	s	RESISTOR,CHIP 2.2K 1/16W(1608)
R633	1-218-716-11	s	RESISTOR,CHIP 10K 1/16W(1608)
R634	1-218-700-11	s	RESISTOR,CHIP 2.2K 1/16W(1608)
R635	1-218-728-11	s	RESISTOR,METAL 33K 1/16W
R636	1-218-716-11	s	RESISTOR,CHIP 10K 1/16W(1608)
R637	1-218-732-11	s	RESISTOR,CHIP 47K 1/16W(1608)

http://getMANUAL.com

(SV-194A BOARD)

Ref. No. or Q'ty	Part No.	SP	Description
R638	1-218-732-11	s	RESISTOR,CHIP 47K 1/16W(1608)
R639	1-218-732-11	s	RESISTOR,CHIP 47K 1/16W(1608)
R640	1-218-724-11	s	RESISTOR,CHIP 22K 1/16W(1608)
R641	1-216-853-11	s	RESISTOR,CHIP 470K 1/16W(1608)
R642	1-216-853-11	s	RESISTOR,CHIP 470K 1/16W(1608)
R644	1-218-740-11	s	RESISTOR,CHIP 100K 1/16W(1608)
R645	1-218-724-11	s	RESISTOR,CHIP 22K 1/16W(1608)
R646	1-216-854-11	s	RESISTOR,CHIP 560K 1/16W
R647	1-218-708-11	s	RESISTOR,CHIP 4.7K 1/16W(1608)
R648	1-218-732-11	s	RESISTOR,CHIP 47K 1/16W(1608)
R649	1-218-740-11	s	RESISTOR,CHIP 100K 1/16W(1608)
R650	1-218-716-11	s	RESISTOR,CHIP 10K 1/16W(1608)
R651	1-218-724-11	s	RESISTOR,CHIP 22K 1/16W(1608)
R652	1-218-644-11	s	RESISTOR,METAL 10 1/16W
R653	1-218-724-11	s	RESISTOR,CHIP 22K 1/16W(1608)
R654	1-218-692-11	s	RESISTOR,CHIP 1.0K 1/16W(1608)
R655	1-218-740-11	s	RESISTOR,CHIP 100K 1/16W(1608)
R656	1-218-724-11	s	RESISTOR,CHIP 22K 1/16W(1608)
R657	1-218-716-11	s	RESISTOR,CHIP 10K 1/16W(1608)
R658	1-218-716-11	s	RESISTOR,CHIP 10K 1/16W(1608)
R659	1-218-236-91	s	RESISTOR,CHIP 1.0
R660	1-218-236-91	s	RESISTOR,CHIP 1.0
R661	1-218-236-91	s	RESISTOR,CHIP 1.0
R662	1-218-236-91	s	RESISTOR,CHIP 1.0
R663	1-216-864-11	s	RESISTOR,CHIP 0 1/16W (1608)
R664	1-218-732-11	s	RESISTOR,CHIP 47K 1/16W(1608)
R665	1-218-716-11	s	RESISTOR,CHIP 10K 1/16W(1608)
R666	1-218-722-11	s	RESISTOR,CHIP 18K 1/16W 1608
R667	1-218-740-11	s	RESISTOR,CHIP 100K 1/16W(1608)
R668	1-218-716-11	s	RESISTOR,CHIP 10K 1/16W(1608)
R669	1-218-692-11	s	RESISTOR,CHIP 1.0K 1/16W(1608)
R671	1-218-740-11	s	RESISTOR,CHIP 100K 1/16W(1608)
R672	1-218-708-11	s	RESISTOR,CHIP 4.7K 1/16W(1608)
R673	1-218-732-11	s	RESISTOR,CHIP 47K 1/16W(1608)
R675	1-218-704-11	s	RESISTOR,CHIP 3.3K 1/16W(1608)
R676	1-218-740-11	s	RESISTOR,CHIP 100K 1/16W(1608)
R677	1-218-716-11	s	RESISTOR,CHIP 10K 1/16W(1608)
R678	1-218-740-11	s	RESISTOR,CHIP 100K 1/16W(1608)
R679	1-218-740-11	s	RESISTOR,CHIP 100K 1/16W(1608)
R680	1-218-740-11	s	RESISTOR,CHIP 100K 1/16W(1608)
R681	1-218-732-11	s	RESISTOR,CHIP 47K 1/16W(1608)
R682	1-218-734-11	s	RESISTOR,CHIP 56K 1/16W(1608)
R683	1-216-864-11	s	RESISTOR,CHIP 0 1/16W (1608)
R684	1-218-728-11	s	RESISTOR,METAL 33K 1/16W
R685	1-218-730-11	s	RESISTOR METAL FILM CHIP 39K
R686	1-218-751-11	s	RESISTOR,CHIP 300K 1/16W(1608)
R687	1-218-744-11	s	RESISTOR,METAL 150K 1/16
R688	1-218-716-11	s	RESISTOR,CHIP 10K 1/16W(1608)
R689	1-218-716-11	s	RESISTOR,CHIP 10K 1/16W(1608)
R690	1-218-716-11	s	RESISTOR,CHIP 10K 1/16W(1608)
R691	1-218-740-11	s	RESISTOR,CHIP 100K 1/16W(1608)
R692	1-218-708-11	s	RESISTOR,CHIP 4.7K 1/16W(1608)
R693	1-218-720-11	s	RESISTOR,CHIP 15K 1/16W(1608)
R694	1-218-717-11	s	RESISTOR,CHIP 11K 1/16W (1608)
R695	1-218-716-11	s	RESISTOR,CHIP 10K 1/16W(1608)
R700	1-218-692-11	s	RESISTOR,CHIP 1.0K 1/16W(1608)
R701	1-218-692-11	s	RESISTOR,CHIP 1.0K 1/16W(1608)
R702	1-218-716-11	s	RESISTOR,CHIP 10K 1/16W(1608)
R703	1-218-732-11	s	RESISTOR,CHIP 47K 1/16W(1608)

(SV-194A BOARD)

Ref. No. or Q'ty	Part No.	SP	Description
R704	1-218-740-11	s	RESISTOR,CHIP 100K 1/16W(1608)
R705	1-218-728-11	s	RESISTOR,METAL 33K 1/16W
R706	1-218-742-11	s	RESISTOR,METAL 120K 1/16
R707	1-218-732-11	s	RESISTOR,CHIP 47K 1/16W(1608)
R708	1-218-742-11	s	RESISTOR,METAL 120K 1/16
R709	1-218-732-11	s	RESISTOR,CHIP 47K 1/16W(1608)
R710	1-218-740-11	s	RESISTOR,CHIP 100K 1/16W(1608)
R711	1-218-732-11	s	RESISTOR,CHIP 47K 1/16W(1608)
R712	1-218-716-11	s	RESISTOR,CHIP 10K 1/16W(1608)
R713	1-218-716-11	s	RESISTOR,CHIP 10K 1/16W(1608)
R714	1-218-716-11	s	RESISTOR,CHIP 10K 1/16W(1608)
R715	1-218-724-11	s	RESISTOR,CHIP 22K 1/16W(1608)
R716	1-218-728-11	s	RESISTOR,METAL 33K 1/16W
R717	1-218-740-11	s	RESISTOR,CHIP 100K 1/16W(1608)
R718	1-218-740-11	s	RESISTOR,CHIP 100K 1/16W(1608)
R719	1-218-740-11	s	RESISTOR,CHIP 100K 1/16W(1608)
R720	1-218-692-11	s	RESISTOR,CHIP 1.0K 1/16W(1608)
R721	1-218-716-11	s	RESISTOR,CHIP 10K 1/16W(1608)
R722	1-218-740-11	s	RESISTOR,CHIP 100K 1/16W(1608)
R723	1-216-853-11	s	RESISTOR,CHIP 470K 1/16W(1608)
R724	1-216-853-11	s	RESISTOR,CHIP 470K 1/16W(1608)
R726	1-216-857-11	s	RESISTOR,CHIP 1.0M 1/16W 1608
R727	1-216-854-11	s	RESISTOR,CHIP 560K 1/16W
R728	1-218-708-11	s	RESISTOR,CHIP 4.7K 1/16W(1608)
R729	1-218-732-11	s	RESISTOR,CHIP 47K 1/16W(1608)
R730	1-218-732-11	s	RESISTOR,CHIP 47K 1/16W(1608)
R731	1-218-716-11	s	RESISTOR,CHIP 10K 1/16W(1608)
R732	1-218-732-11	s	RESISTOR,CHIP 47K 1/16W(1608)
R733	1-218-732-11	s	RESISTOR,CHIP 47K 1/16W(1608)
R734	1-218-732-11	s	RESISTOR,CHIP 47K 1/16W(1608)
R735	1-218-732-11	s	RESISTOR,CHIP 47K 1/16W(1608)
R736	1-218-732-11	s	RESISTOR,CHIP 47K 1/16W(1608)
R737	1-218-727-11	s	RESISTOR,CHIP 30K 1/16W(1608)
R738	1-218-742-11	s	RESISTOR,METAL 120K 1/16
R740	1-218-716-11	s	RESISTOR,CHIP 10K 1/16W(1608)
R741	1-218-732-11	s	RESISTOR,CHIP 47K 1/16W(1608)
R742	1-218-668-11	s	RESISTOR,CHIP 100 1/16W (1608)
R743	1-218-732-11	s	RESISTOR,CHIP 47K 1/16W(1608)
R744	1-218-732-11	s	RESISTOR,CHIP 47K 1/16W(1608)
R745	1-218-724-11	s	RESISTOR,CHIP 22K 1/16W(1608)
R746	1-218-716-11	s	RESISTOR,CHIP 10K 1/16W(1608)
R747	1-218-712-11	s	RESISTOR,METAL 6.8K 1/16W
R748	1-218-644-11	s	RESISTOR,METAL 10 1/16W
R749	1-218-730-11	s	RESISTOR METAL FILM CHIP 39K
R750	1-218-692-11	s	RESISTOR,CHIP 1.0K 1/16W(1608)
R751	1-218-730-11	s	RESISTOR METAL FILM CHIP 39K
R752	1-218-730-11	s	RESISTOR METAL FILM CHIP 39K
R753	1-218-730-11	s	RESISTOR METAL FILM CHIP 39K
R754	1-218-231-11	s	RESISTOR,CHIP 1 1/2W (4532)
R755	1-218-231-11	s	RESISTOR,CHIP 1 1/2W (4532)
R756	1-218-732-11	s	RESISTOR,CHIP 47K 1/16W(1608)
R757	1-218-712-11	s	RESISTOR,METAL 6.8K 1/16W
R758	1-218-714-11	s	RESISTOR,CHIP 8.2K 1/16W(1608)
R759	1-218-708-11	s	RESISTOR,CHIP 4.7K 1/16W(1608)
R760	1-218-728-11	s	RESISTOR,METAL 33K 1/16W
R761	1-218-704-11	s	RESISTOR,CHIP 3.3K 1/16W(1608)
R762	1-218-700-11	s	RESISTOR,CHIP 2.2K 1/16W(1608)
R763	1-218-708-11	s	RESISTOR,CHIP 4.7K 1/16W(1608)
R764	1-218-708-11	s	RESISTOR,CHIP 4.7K 1/16W(1608)

(SV-194A BOARD)

Ref. No. or Q'ty	Part No.	SP	Description
R765	1-218-716-11	s	RESISTOR,CHIP 10K 1/16W(1608)
R768	1-218-676-11	s	RESISTOR,CHIP 220 1/16W(1608)
R769	1-218-676-11	s	RESISTOR,CHIP 220 1/16W(1608)
R770	1-218-716-11	s	RESISTOR,CHIP 10K 1/16W(1608)
R771	1-218-740-11	s	RESISTOR,CHIP 100K 1/16W(1608)
R773	1-218-716-11	s	RESISTOR,CHIP 10K 1/16W(1608)
R774	1-218-732-11	s	RESISTOR,CHIP 47K 1/16W(1608)
R775	1-218-716-11	s	RESISTOR,CHIP 10K 1/16W(1608)
R776	1-218-716-11	s	RESISTOR,CHIP 10K 1/16W(1608)
R777	1-218-716-11	s	RESISTOR,CHIP 10K 1/16W(1608)
R900	1-218-740-11	s	RESISTOR,CHIP 100K 1/16W(1608)
R901	1-218-692-11	s	RESISTOR,CHIP 1.0K 1/16W(1608)
R902	1-218-708-11	s	RESISTOR,CHIP 4.7K 1/16W(1608)
R903	1-218-708-11	s	RESISTOR,CHIP 4.7K 1/16W(1608)
R904	1-218-740-11	s	RESISTOR,CHIP 100K 1/16W(1608)
R905	1-216-853-11	s	RESISTOR,CHIP 470K 1/16W(1608)
R906	1-218-696-11	s	RESISTOR CHIP 1.5K 1/16W(1608)
R907	1-218-644-11	s	RESISTOR,METAL 10 1/16W
R908	1-218-684-11	s	RESISTOR CHIP 470 1/16W (1608)
R909	1-218-696-11	s	RESISTOR CHIP 1.5K 1/16W(1608)
R910	1-218-744-11	s	RESISTOR,METAL 150K 1/16
R911	1-218-704-11	s	RESISTOR,CHIP 3.3K 1/16W(1608)
R912	1-218-748-11	s	RESISTOR,CHIP 220K 1/16W(1608)
R913	1-218-748-11	s	RESISTOR,CHIP 220K 1/16W(1608)
R914	1-218-716-11	s	RESISTOR,CHIP 10K 1/16W(1608)
R915	1-218-716-11	s	RESISTOR,CHIP 10K 1/16W(1608)
R916	1 216 855 11	s	RESISTOR,CHIP 680K 1/16W 1608
R917	1-218-708-11	s	RESISTOR,CHIP 4.7K 1/16W(1608)
R918	1-218-708-11	s	RESISTOR,CHIP 4.7K 1/16W(1608)
R919	1-218-716-11	s	RESISTOR,CHIP 10K 1/16W(1608)
R920	1-218-740-11	s	RESISTOR,CHIP 100K 1/16W(1608)
R921	1-218-692-11	s	RESISTOR,CHIP 1.0K 1/16W(1608)
R922	1-216-857-11	s	RESISTOR,CHIP 1.0M 1/16W 1608
R950	1-218-732-11	s	RESISTOR,CHIP 47K 1/16W(1608)
R951	1-218-740-11	s	RESISTOR,CHIP 100K 1/16W(1608)
R952	1-218-732-11	s	RESISTOR,CHIP 47K 1/16W(1608)
R953	1-218-732-11	s	RESISTOR,CHIP 47K 1/16W(1608)
R954	1-216-298-00	s	RESISTOR,CHIP 2.2 1/10(2012)
R955	1-216-298-00	s	RESISTOR,CHIP 2.2 1/10(2012)
R956	1-218-236-91	s	RESISTOR,CHIP 1.0
R957	1-218-732-11	s	RESISTOR,CHIP 47K 1/16W(1608)
R958	1-218-716-11	s	RESISTOR,CHIP 10K 1/16W(1608)
R959	1-218-724-11	s	RESISTOR,CHIP 22K 1/16W(1608)
R960	1-218-724-11	s	RESISTOR,CHIP 22K 1/16W(1608)
R961	1-216-298-00	s	RESISTOR,CHIP 2.2 1/10(2012)
R962	1-216-298-00	s	RESISTOR,CHIP 2.2 1/10(2012)
R963	1-218-236-91	s	RESISTOR,CHIP 1.0
R964	1-218-720-11	s	RESISTOR,CHIP 15K 1/16W(1608)
R965	1-218-720-11	s	RESISTOR,CHIP 15K 1/16W(1608)
RB100	1-239-308-11	s	RESISTOR ARRAY,CHIP 47K
RB200	1-239-306-11	s	RESISTOR ARRAY,CHIP 10K
RB201	1-239-412-11	s	NETWORK, RESISTOR 100 (1608)
RB202	1-236-904-11	s	RESISTOR NETWORK 1K (1608)
RB203	1-236-904-11	s	RESISTOR NETWORK 1K (1608)
RB204	1-236-904-11	s	RESISTOR NETWORK 1K (1608)
RB205	1-239-306-11	s	RESISTOR ARRAY,CHIP 10K
RB300	1-239-308-11	s	RESISTOR ARRAY,CHIP 47K
RB301	1-239-308-11	s	RESISTOR ARRAY,CHIP 47K
RB302	1-239-308-11	s	RESISTOR ARRAY,CHIP 47K

(SV-194A BOARD)

Ref. No. or Q'ty	Part No.	SP	Description
RB303	1-236-904-11	s	RESISTOR NETWORK 1K (1608)
RB304	1-236-904-11	s	RESISTOR NETWORK 1K (1608)
RB305	1-236-904-11	s	RESISTOR NETWORK 1K (1608)
RB400	1-239-308-11	s	RESISTOR ARRAY,CHIP 47K
RV100	1-237-036-11	s	RESISTOR,ADJ,CERMET 10K
S100	1-572-971-31	s	SWITCH,SLIDE
S101	1-572-474-11	s	SWITCH,TACTILE
S400	1-572-719-11	s	SWITCH,PUSH(1 KEY)
S401	1-572-719-11	s	SWITCH,PUSH(1 KEY)
S402	1-572-719-11	s	SWITCH,PUSH(1 KEY)
S403	1-572-719-11	s	SWITCH,PUSH(1 KEY)
S404	1-572-719-11	s	SWITCH,PUSH(1 KEY)
S405	1-572-719-11	s	SWITCH,PUSH(1 KEY)
S406	1-572-719-11	s	SWITCH,PUSH(1 KEY)
T950	1-424-511-11	s	TRANSFORMER,FE
T951	1-424-511-11	s	TRANSFORMER,FE
X100	1-760-273-11	s	VIBRATOR, CRYSTAL
X400	1-579-928-11	s	VIBRATOR CERAMIC (2.27MHZ)

SW-21 BOARD

Ref. No. or Q'ty	Part No.	SP	Description
1pc	A-8322-899-A	o	MOUNTED CIRCUIT BOARD, SW-21
4pcs	4-352-844-01	o	PIN, LEAD, COATING
C1	1-164-227-11	s	CAPACITOR,CERAMIC 0.022MF/25V
C2	1-164-227-11	s	CAPACITOR,CERAMIC 0.022MF/25V
C4	1-164-227-11	s	CAPACITOR,CERAMIC 0.022MF/25V
C5	1-164-227-11	s	CAPACITOR,CERAMIC 0.022MF/25V
C6	1-164-227-11	s	CAPACITOR,CERAMIC 0.022MF/25V
C7	1-164-227-11	s	CAPACITOR,CERAMIC 0.022MF/25V
C8	1-104-913-11	s	CAPACITOR,CHIP TANTAL 10MF/16V
C9	1-107-686-11	s	CAPACITOR,CHIP ELECT 4.7MF/16V
C10	1-126-397-11	s	CAPACITOR ELECT 33MF/25V(CHIP)
C11	1-135-177-21	s	CAPACITOR TANTALUM 1MF/25V
C12	1-164-227-11	s	CAPACITOR,CERAMIC 0.022MF/25V
C14	1-126-397-11	s	CAPACITOR ELECT 33MF/25V(CHIP)
C15	1-164-227-11	s	CAPACITOR,CERAMIC 0.022MF/25V
C18	1-164-227-11	s	CAPACITOR,CERAMIC 0.022MF/25V
C19	1-164-227-11	s	CAPACITOR,CERAMIC 0.022MF/25V
C21	1-126-397-11	s	CAPACITOR ELECT 33MF/25V(CHIP)
C22	1-164-227-11	s	CAPACITOR,CERAMIC 0.022MF/25V
C23	1-164-227-11	s	CAPACITOR,CERAMIC 0.022MF/25V
C25	1-135-177-21	s	CAPACITOR TANTALUM 1MF/25V
C26	1-164-227-11	s	CAPACITOR,CERAMIC 0.022MF/25V
C27	1-117-193-11	s	CAPACITOR,3 TERMINAL 1.5MF/50V
C28	1-164-227-11	s	CAPACITOR,CERAMIC 0.022MF/25V
C30	1-164-227-11	s	CAPACITOR,CERAMIC 0.022MF/25V
C31	1-107-689-21	s	CAPACITOR TANTALUM 1MF/35V
C32	1 164 227 11	s	CAPACITOR,CERAMIC 0.022MF/25V
C33	1-164-227-11	s	CAPACITOR,CERAMIC 0.022MF/25V
C34	1-104-913-11	s	CAPACITOR,CHIP TANTAL 10MF/16V
C35	1-164-227-11	s	CAPACITOR,CERAMIC 0.022MF/25V
C36	1-115-416-11	s	CAPACITOR,CERAMIC 1000PF/25V
C37	1-115-416-11	s	CAPACITOR,CERAMIC 1000PF/25V
C38	1-162-919-11	s	CAPACITOR,CERAMIC 22PF/50V CH
C39	1-162-919-11	s	CAPACITOR,CERAMIC 22PF/50V CH
C40	1-115-416-11	s	CAPACITOR,CERAMIC 1000PF/25V
C41	1-104-913-11	s	CAPACITOR,CHIP TANTAL 10MF/16V
C42	1-164-227-11	s	CAPACITOR,CERAMIC 0.022MF/25V
C43	1-164-227-11	s	CAPACITOR,CERAMIC 0.022MF/25V
C44	1-115-416-11	s	CAPACITOR,CERAMIC 1000PF/25V
C45	1-104-913-11	s	CAPACITOR,CHIP TANTAL 10MF/16V
C46	1-164-227-11	s	CAPACITOR,CERAMIC 0.022MF/25V
C49	1-164-227-11	s	CAPACITOR,CERAMIC 0.022MF/25V
C50	1-164-227-11	s	CAPACITOR,CERAMIC 0.022MF/25V
C51	1-165-176-11	s	CAPACITOR,CERAMIC 47000PF/16V
C52	1-107-686-11	s	CAPACITOR,CHIP ELECT 4.7MF/16V
CN3	1-691-591-11	o	PIN, CONNECTOR (8P)(SMD)1.5MM
CN4	1-573-806-21	s	PIN, CONNECTOR (6P)(SMD)1.5MM
CN5	1-573-290-21	s	PIN, CONNECTOR (4P)(SMD)1.5MM
CN6	1-766-383-11	o	PIN, CONNECTOR (12P)(SMD)1.5MM
CN11	1-691-591-11	o	PIN, CONNECTOR (8P)(SMD)1.5MM
CN100	1-778-551-11	o	PIN, CONNECTOR 20P
D1	8-719-981-56	s	DIODE SB05W05CP (RECTI)
D2	8-719-981-56	s	DIODE SB05W05CP (RECTI)
D3	8-719-066-98	s	DIODE RB051L-40
D6	8-719-938-72	s	DIODE SB01-05CP (RECTI)
D7	8-719-941-86	s	DIODE DAN202U
D8	8-719-981-56	s	DIODE SB05W05CP (RECTI)

(SW-21 BOARD)

Ref. No. or Q'ty	Part No.	SP	Description
D9	8-719-981-56	s	DIODE SB05W05CP (RECTI)
D10	8-719-820-41	s	DIODE 1SS302
IC1	8-759-058-45	s	IC NJM3403AV
IC3	8-759-058-45	s	IC NJM3403AV
IC6	8-759-058-45	s	IC NJM3403AV
IC12	8-759-521-35	s	IC TL5001CD
IC15	8-759-196-96	s	IC TC7SH08FU (TE85R)
IC16	8-759-564-49	s	IC TC7W53FU-TE12R
IC17	8-759-259-18	s	IC MB3793-42PNF
IC18	8-759-184-64	s	IC TC4W66FU
IC20	8-759-165-37	s	IC X24164SIC7000
IC23	8-759-149-10	s	IC UPD4702G
IC24	8-759-710-88	s	IC NJM431U
L1	1-424-642-11	s	COIL, CHOKE 47UH
L3	1-424-642-11	s	COIL, CHOKE 47UH
Q1	8-729-117-32	s	TRANSISTOR 2SC4177
Q2	8-729-140-63	s	TRANSISTOR 2SA1611-M5M6
Q3	8-729-029-14	s	TRANSISTOR DTC144EUA-T106
Q4	8-729-045-53	s	TRANSISTOR SI4431DY-T1
Q5	8-729-141-75	s	TRANSISTOR 2SD596DV345
Q6	8-729-028-91	s	TRANSISTOR DTA144EUA-T106
Q7	8-729-029-14	s	TRANSISTOR DTC144EUA-T106
Q9	8-729-028-91	s	TRANSISTOR DTA144EUA-T106
Q11	8-729-028-91	s	TRANSISTOR DTA144EUA-T106
R1	1 218 724 11	s	RESISTOR,CHIP 22K 1/16W(1608)
R2	1-218-740-11	s	RESISTOR,CHIP 100K 1/16W(1608)
R3	1-218-668-11	s	RESISTOR,CHIP 100 1/16W (1608)
R4	1-218-692-11	s	RESISTOR,CHIP 1.0K 1/16W(1608)
R5	1-218-716-11	s	RESISTOR,CHIP 10K 1/16W(1608)
R6	1-218-690-11	s	RESISTOR CHIP 820 1/16W (1608)
R7	1-218-668-11	s	RESISTOR,CHIP 100 1/16W (1608)
R8	1-218-740-11	s	RESISTOR,CHIP 100K 1/16W(1608)
R9	1-218-692-11	s	RESISTOR,CHIP 1.0K 1/16W(1608)
R11	1-218-724-11	s	RESISTOR,CHIP 22K 1/16W(1608)
R12	1-218-740-11	s	RESISTOR,CHIP 100K 1/16W(1608)
R13	1-218-748-11	s	RESISTOR,CHIP 220K 1/16W(1608)
R14	1-218-716-11	s	RESISTOR,CHIP 10K 1/16W(1608)
R15	1-218-740-11	s	RESISTOR,CHIP 100K 1/16W(1608)
R16	1-218-708-11	s	RESISTOR,CHIP 4.7K 1/16W(1608)
R17	1-218-736-11	s	RESISTOR,CHIP 68K 1/16W(1608)
R18	1-218-720-11	s	RESISTOR,CHIP 15K 1/16W(1608)
R20	1-218-692-11	s	RESISTOR,CHIP 1.0K 1/16W(1608)
R22	1-218-740-11	s	RESISTOR,CHIP 100K 1/16W(1608)
R23	1-218-740-11	s	RESISTOR,CHIP 100K 1/16W(1608)
R25	1-218-644-11	s	RESISTOR,METAL 10 1/16W
R26	1-218-740-11	s	RESISTOR,CHIP 100K 1/16W(1608)
R27	1-218-692-11	s	RESISTOR,CHIP 1.0K 1/16W(1608)
R28	1-218-668-11	s	RESISTOR,CHIP 100 1/16W (1608)
R29	1-218-668-11	s	RESISTOR,CHIP 100 1/16W (1608)
R30	1-218-692-11	s	RESISTOR,CHIP 1.0K 1/16W(1608)
R32	1-218-740-11	s	RESISTOR,CHIP 100K 1/16W(1608)
R37	1-218-726-11	s	RESISTOR CHIP 27K 1/16W (1608)
R38	1-218-748-11	s	RESISTOR,CHIP 220K 1/16W(1608)
R39	1-218-708-11	s	RESISTOR,CHIP 4.7K 1/16W(1608)
R40	1-218-692-11	s	RESISTOR,CHIP 1.0K 1/16W(1608)
R41	1-218-740-11	s	RESISTOR,CHIP 100K 1/16W(1608)
R42	1-218-724-11	s	RESISTOR,CHIP 22K 1/16W(1608)

(SW-21 BOARD)

Ref. No. or Q'ty	Part No.	SP	Description
R43	1-218-740-11	s	RESISTOR,CHIP 100K 1/16W(1608)
R44	1-218-668-11	s	RESISTOR,CHIP 100 1/16W (1608)
R45	1-218-720-11	s	RESISTOR,CHIP 15K 1/16W(1608)
R46	1-218-692-11	s	RESISTOR,CHIP 1.0K 1/16W(1608)
R47	1-218-736-11	s	RESISTOR,CHIP 68K 1/16W(1608)
R48	1-218-720-11	s	RESISTOR,CHIP 15K 1/16W(1608)
R50	1-218-740-11	s	RESISTOR,CHIP 100K 1/16W(1608)
R51	1-218-714-11	s	RESISTOR,CHIP 8.2K 1/16W(1608)
R52	1-218-740-11	s	RESISTOR,CHIP 100K 1/16W(1608)
R53	1-217-671-11	s	RESISTOR CHIP 1 1/10W(2125)
R54	1-217-671-11	s	RESISTOR CHIP 1 1/10W(2125)
R55	1-217-671-11	s	RESISTOR CHIP 1 1/10W(2125)
R56	1-217-671-11	s	RESISTOR CHIP 1 1/10W(2125)
R58	1-218-692-11	s	RESISTOR,CHIP 1.0K 1/16W(1608)
R59	1-218-692-11	s	RESISTOR,CHIP 1.0K 1/16W(1608)
R60	1-218-740-11	s	RESISTOR,CHIP 100K 1/16W(1608)
R61	1-218-692-11	s	RESISTOR,CHIP 1.0K 1/16W(1608)
R62	1-218-740-11	s	RESISTOR,CHIP 100K 1/16W(1608)
R63	1-218-740-11	s	RESISTOR,CHIP 100K 1/16W(1608)
R64	1-218-668-11	s	RESISTOR,CHIP 100 1/16W (1608)
R65	1-218-692-11	s	RESISTOR,CHIP 1.0K 1/16W(1608)
R68	1-218-740-11	s	RESISTOR,CHIP 100K 1/16W(1608)
R69	1-218-740-11	s	RESISTOR,CHIP 100K 1/16W(1608)
R72	1-218-668-11	s	RESISTOR,CHIP 100 1/16W (1608)
R73	1-218-668-11	s	RESISTOR,CHIP 100 1/16W (1608)
R74	1-218-668-11	s	RESISTOR,CHIP 100 1/16W (1608)
R75	1-218-668-11	s	RESISTOR,CHIP 100 1/16W (1608)
R76	1-218-728-11	s	RESISTOR,METAL 33K 1/16W
R77	1-218-728-11	s	RESISTOR,METAL 33K 1/16W
R78	1-218-728-11	s	RESISTOR,METAL 33K 1/16W
R79	1-218-668-11	s	RESISTOR,CHIP 100 1/16W (1608)
R80	1-218-668-11	s	RESISTOR,CHIP 100 1/16W (1608)
R81	1-218-718-11	s	RESISTOR CHIP 12K 1/16W (1608)
R82	1-218-716-11	s	RESISTOR,CHIP 10K 1/16W(1608)
R84	1-218-728-11	s	RESISTOR,METAL 33K 1/16W
R85	1-218-728-11	s	RESISTOR,METAL 33K 1/16W
R86	1-218-716-11	s	RESISTOR,CHIP 10K 1/16W(1608)
R87	1-218-716-11	s	RESISTOR,CHIP 10K 1/16W(1608)
R88	1-218-718-11	s	RESISTOR CHIP 12K 1/16W (1608)
R89	1-218-708-11	s	RESISTOR,CHIP 4.7K 1/16W(1608)
R90	1-218-716-11	s	RESISTOR,CHIP 10K 1/16W(1608)
R91	1-218-718-11	s	RESISTOR CHIP 12K 1/16W (1608)
R92	1-218-716-11	s	RESISTOR,CHIP 10K 1/16W(1608)
R96	1-218-716-11	s	RESISTOR,CHIP 10K 1/16W(1608)
R123	1-218-668-11	s	RESISTOR,CHIP 100 1/16W (1608)
R130	1-218-668-11	s	RESISTOR,CHIP 100 1/16W (1608)
R146	1-218-680-11	s	RESISTOR,CHIP 330 1/16W(1608)
R149	1-218-692-11	s	RESISTOR,CHIP 1.0K 1/16W(1608)
R150	1-218-692-11	s	RESISTOR,CHIP 1.0K 1/16W(1608)
R155	1-218-740-11	s	RESISTOR,CHIP 100K 1/16W(1608)
R156	1-218-740-11	s	RESISTOR,CHIP 100K 1/16W(1608)
R157	1-218-668-11	s	RESISTOR,CHIP 100 1/16W (1608)
R158	1-218-716-11	s	RESISTOR,CHIP 10K 1/16W(1608)
RB1	1-239-436-11	s	RESISTOR,NETWORK 33K (1608)
RB2	1-239-412-11	s	NETWORK, RESISTOR 100 (1608)
RB4	1-239-436-11	s	RESISTOR,NETWORK 33K (1608)
RB5	1-239-436-11	s	RESISTOR,NETWORK 33K (1608)
RB6	1-239-436-11	s	RESISTOR,NETWORK 33K (1608)

(SW-21 BOARD)

Ref. No. or Q'ty	Part No.	SP	Description
RB7	1-239-436-11	s	RESISTOR,NETWORK 33K (1608)
RB8	1-236-907-11	s	RESISTOR BLOCK 100K (1608)
RB9	1-239-412-11	s	NETWORK, RESISTOR 100 (1608)
RB10	1-236-904-11	s	RESISTOR NETWORK 1K (1608)
RB11	1-236-907-11	s	RESISTOR BLOCK 100K (1608)
RB12	1-236-904-11	s	RESISTOR NETWORK 1K (1608)
RB13	1-236-907-11	s	RESISTOR BLOCK 100K (1608)
RB14	1-236-904-11	s	RESISTOR NETWORK 1K (1608)
RB15	1-236-907-11	s	RESISTOR BLOCK 100K (1608)
RB16	1-236-907-11	s	RESISTOR BLOCK 100K (1608)
RV1	1-225-566-11	s	RES, VAR, CARBON 50K
RV2	1-225-566-11	s	RES, VAR, CARBON 50K
RV3	1-225-566-11	s	RES, VAR, CARBON 50K
RV4	1-225-566-11	s	RES, VAR, CARBON 50K
S1	1-570-865-11	s	SWITCH, SLIDE (1-1-2)
S2	1-570-865-11	s	SWITCH, SLIDE (1-1-2)
S3	1-570-865-11	s	SWITCH, SLIDE (1-1-2)
S4	1-570-865-11	s	SWITCH, SLIDE (1-1-2)
S5	1-570-865-11	s	SWITCH, SLIDE (1-1-2)
S6	1-570-865-11	s	SWITCH, SLIDE (1-1-2)
S7	1-570-865-11	s	SWITCH, SLIDE (1-1-2)
S8	1-570-865-11	s	SWITCH, SLIDE (1-1-2)
S9	1-570-865-11	s	SWITCH, SLIDE (1-1-2)
S10	1-692-881-41	s	SWITCH, SLIDE
X1	1-760-465-11	s	VIBRATOR, CRYSTAL

SW-22 BOARD

Ref. No. or Q'ty	Part No.	SP	Description
1pc	A-8322-973-A	o	MOUNTED CIRCUIT BOARD, SW-22
1pc	4-937-336-32	o	HOLDER, LED
CN3	1-691-591-11	o	PIN,CONNECTOR (8P)(SMD)(1.5MM)
D1	8-719-076-36	s	DIODE TLGE160
R1	1-216-635-11	s	RESISTOR CHIP 220 1/10W (2012)
S1	1-572-725-11	s	SWITCH,TACTILE
S2	1-572-725-11	s	SWITCH,TACTILE
S3	1-572-725-11	s	SWITCH,TACTILE
S4	1-572-725-11	s	SWITCH,TACTILE
S5	1-572-725-11	s	SWITCH,TACTILE
S6	1-572-725-11	s	SWITCH,TACTILE

SW-23 BOARD

Ref. No. or Q'ty	Part No.	SP	Description
1pc	A-8322-974-A	o	MOUNTED CIRCUIT BOARD, SW-23
CN4	1-573-806-21	s	PIN,CONNECTOR (6P)(SMD)(1.5MM)
D1	8-719-059-71	s	DIODE BR5305S
R1	1-216-635-11	s	RESISTOR CHIP 220 1/10W (2012)
S1	1-570-865-11	s	SWITCH, SLIDE (1-1-2)
S2	1-570-865-11	s	SWITCH, SLIDE (1-1-2)
S3	1-570-854-11	s	SWITCH, SLIDE (1-1-3)

SY-259B BOARD

Ref. No. or Q'ty	Part No.	SP	Description
1pc	A-8322-897-A	o	MOUNTED CIRCUIT BOARD, SY-259B
5pcs	3-729-061-01	s	SCREW (M2X4.5) (TYPE 1)(STEEL)
2pcs	3-603-737-01	o	LEVER,BOARD
1pc	⚠ 1-767-156-11	s	OSCILLATOR,CRYSTAL(IN BATTERY)
C1	1-107-826-11	s	CAPACITOR,CHIP CERAMIC 0.1MF
C2	1-107-826-11	s	CAPACITOR,CHIP CERAMIC 0.1MF
C3	1-107-826-11	s	CAPACITOR,CHIP CERAMIC 0.1MF
C4	1-107-826-11	s	CAPACITOR,CHIP CERAMIC 0.1MF
C5	1-107-826-11	s	CAPACITOR,CHIP CERAMIC 0.1MF
C101	1-107-826-11	s	CAPACITOR,CHIP CERAMIC 0.1MF
C102	1-107-826-11	s	CAPACITOR,CHIP CERAMIC 0.1MF
C103	1-107-826-11	s	CAPACITOR,CHIP CERAMIC 0.1MF
C104	1-107-826-11	s	CAPACITOR,CHIP CERAMIC 0.1MF
C105	1-107-826-11	s	CAPACITOR,CHIP CERAMIC 0.1MF
C106	1-107-826-11	s	CAPACITOR,CHIP CERAMIC 0.1MF
C108	1-107-826-11	s	CAPACITOR,CHIP CERAMIC 0.1MF
C109	1-107-826-11	s	CAPACITOR,CHIP CERAMIC 0.1MF
C110	1-107-826-11	s	CAPACITOR,CHIP CERAMIC 0.1MF
C111	1-107-826-11	s	CAPACITOR,CHIP CERAMIC 0.1MF
C112	1-107-826-11	s	CAPACITOR,CHIP CERAMIC 0.1MF
C113	1-107-826-11	s	CAPACITOR,CHIP CERAMIC 0.1MF
C114	1-107-826-11	s	CAPACITOR,CHIP CERAMIC 0.1MF
C115	1-107-826-11	s	CAPACITOR,CHIP CERAMIC 0.1MF
C116	1-107-826-11	s	CAPACITOR,CHIP CERAMIC 0.1MF
C117	1-107-826-11	s	CAPACITOR,CHIP CERAMIC 0.1MF
C118	1-162-923-11	s	CAPACITOR,CERAMIC 47PF/50V CH
C119	1 162 923 11	s	CAPACITOR,CERAMIC 47PF/50V CH
C120	1-107-826-11	s	CAPACITOR,CHIP CERAMIC 0.1MF
C121	1-107-826-11	s	CAPACITOR,CHIP CERAMIC 0.1MF
C122	1-107-826-11	s	CAPACITOR,CHIP CERAMIC 0.1MF
C123	1-107-826-11	s	CAPACITOR,CHIP CERAMIC 0.1MF
C124	1-107-826-11	s	CAPACITOR,CHIP CERAMIC 0.1MF
C125	1-107-826-11	s	CAPACITOR,CHIP CERAMIC 0.1MF
C126	1-107-826-11	s	CAPACITOR,CHIP CERAMIC 0.1MF
C127	1-107-826-11	s	CAPACITOR,CHIP CERAMIC 0.1MF
C128	1-107-826-11	s	CAPACITOR,CHIP CERAMIC 0.1MF
C129	1-107-826-11	s	CAPACITOR,CHIP CERAMIC 0.1MF
C130	1-107-826-11	s	CAPACITOR,CHIP CERAMIC 0.1MF
C131	1-107-826-11	s	CAPACITOR,CHIP CERAMIC 0.1MF
C132	1-107-826-11	s	CAPACITOR,CHIP CERAMIC 0.1MF
C133	1-107-826-11	s	CAPACITOR,CHIP CERAMIC 0.1MF
C134	1-107-826-11	s	CAPACITOR,CHIP CERAMIC 0.1MF
C135	1-107-826-11	s	CAPACITOR,CHIP CERAMIC 0.1MF
C136	1-107-826-11	s	CAPACITOR,CHIP CERAMIC 0.1MF
C137	1-107-826-11	s	CAPACITOR,CHIP CERAMIC 0.1MF
C138	1-107-826-11	s	CAPACITOR,CHIP CERAMIC 0.1MF
C141	1-107-826-11	s	CAPACITOR,CHIP CERAMIC 0.1MF
C144	1-113-991-11	s	CAPACITOR TANTALUM 33MF/16V
C145	1-113-991-11	s	CAPACITOR TANTALUM 33MF/16V
C146	1-113-991-11	s	CAPACITOR TANTALUM 33MF/16V
C200	1-107-826-11	s	CAPACITOR,CHIP CERAMIC 0.1MF
C201	1-107-826-11	s	CAPACITOR,CHIP CERAMIC 0.1MF
C202	1-107-826-11	s	CAPACITOR,CHIP CERAMIC 0.1MF
C203	1-107-826-11	s	CAPACITOR,CHIP CERAMIC 0.1MF
C204	1-162-915-11	s	CAPACITOR,CERAMIC 10PF/50V CH
C205	1-162-915-11	s	CAPACITOR,CERAMIC 10PF/50V CH
C206	1-162-915-11	s	CAPACITOR,CERAMIC 10PF/50V CH
C207	1-162-915-11	s	CAPACITOR,CERAMIC 10PF/50V CH
C208	1-107-826-11	s	CAPACITOR,CHIP CERAMIC 0.1MF

(SY-259B BOARD)

Ref. No. or Q'ty	Part No.	SP	Description
C209	1-107-826-11	s	CAPACITOR,CHIP CERAMIC 0.1MF
C210	1-107-826-11	s	CAPACITOR,CHIP CERAMIC 0.1MF
C211	1-107-826-11	s	CAPACITOR,CHIP CERAMIC 0.1MF
C212	1-107-826-11	s	CAPACITOR,CHIP CERAMIC 0.1MF
C213	1-107-826-11	s	CAPACITOR,CHIP CERAMIC 0.1MF
C214	1-107-826-11	s	CAPACITOR,CHIP CERAMIC 0.1MF
C215	1-107-826-11	s	CAPACITOR,CHIP CERAMIC 0.1MF
C216	1-107-826-11	s	CAPACITOR,CHIP CERAMIC 0.1MF
C217	1-107-826-11	s	CAPACITOR,CHIP CERAMIC 0.1MF
C218	1-107-826-11	s	CAPACITOR,CHIP CERAMIC 0.1MF
C219	1-107-826-11	s	CAPACITOR,CHIP CERAMIC 0.1MF
C220	1-107-826-11	s	CAPACITOR,CHIP CERAMIC 0.1MF
C221	1-107-826-11	s	CAPACITOR,CHIP CERAMIC 0.1MF
C222	1-107-826-11	s	CAPACITOR,CHIP CERAMIC 0.1MF
C223	1-107-826-11	s	CAPACITOR,CHIP CERAMIC 0.1MF
C224	1-107-826-11	s	CAPACITOR,CHIP CERAMIC 0.1MF
C225	1-107-826-11	s	CAPACITOR,CHIP CERAMIC 0.1MF
C226	1-107-826-11	s	CAPACITOR,CHIP CERAMIC 0.1MF
C300	1-107-826-11	s	CAPACITOR,CHIP CERAMIC 0.1MF
C302	1-107-826-11	s	CAPACITOR,CHIP CERAMIC 0.1MF
C304	1-107-826-11	s	CAPACITOR,CHIP CERAMIC 0.1MF
C305	1-126-394-11	s	CAPACITOR ELECT 10MF/16V(CHIP)
C306	1-107-826-11	s	CAPACITOR,CHIP CERAMIC 0.1MF
C307	1-107-826-11	s	CAPACITOR,CHIP CERAMIC 0.1MF
C308	1-107-826-11	s	CAPACITOR,CHIP CERAMIC 0.1MF
C309	1-107-826-11	s	CAPACITOR,CHIP CERAMIC 0.1MF
C310	1 107 826 11	s	CAPACITOR,CHIP CERAMIC 0.1MF
C311	1-107-826-11	s	CAPACITOR,CHIP CERAMIC 0.1MF
C312	1-107-826-11	s	CAPACITOR,CHIP CERAMIC 0.1MF
C313	1-107-826-11	s	CAPACITOR,CHIP CERAMIC 0.1MF
C314	1-107-826-11	s	CAPACITOR,CHIP CERAMIC 0.1MF
C315	1-113-991-11	s	CAPACITOR TANTALUM 33MF/16V
C316	1-107-826-11	s	CAPACITOR,CHIP CERAMIC 0.1MF
C317	1-126-394-11	s	CAPACITOR ELECT 10MF/16V(CHIP)
C318	1-107-826-11	s	CAPACITOR,CHIP CERAMIC 0.1MF
C330	1-104-913-11	s	CAPACITOR,CHIP TANTAL 10MF/16V
C400	1-107-826-11	s	CAPACITOR,CHIP CERAMIC 0.1MF
C401	1-107-826-11	s	CAPACITOR,CHIP CERAMIC 0.1MF
C402	1-107-826-11	s	CAPACITOR,CHIP CERAMIC 0.1MF
C403	1-107-826-11	s	CAPACITOR,CHIP CERAMIC 0.1MF
C404	1-107-826-11	s	CAPACITOR,CHIP CERAMIC 0.1MF
C405	1-107-826-11	s	CAPACITOR,CHIP CERAMIC 0.1MF
C406	1-107-826-11	s	CAPACITOR,CHIP CERAMIC 0.1MF
C407	1-115-581-11	s	CAPACITOR CHIP ELECT 100MF/16V
C408	1-115-581-11	s	CAPACITOR CHIP ELECT 100MF/16V
C409	1-107-826-11	s	CAPACITOR,CHIP CERAMIC 0.1MF
C410	1-115-581-11	s	CAPACITOR CHIP ELECT 100MF/16V
C411	1-115-581-11	s	CAPACITOR CHIP ELECT 100MF/16V
C412	1-107-826-11	s	CAPACITOR,CHIP CERAMIC 0.1MF
C413	1-115-581-11	s	CAPACITOR CHIP ELECT 100MF/16V
C414	1-115-581-11	s	CAPACITOR CHIP ELECT 100MF/16V
C415	1-107-826-11	s	CAPACITOR,CHIP CERAMIC 0.1MF
C416	1-115-581-11	s	CAPACITOR CHIP ELECT 100MF/16V
C417	1-115-581-11	s	CAPACITOR CHIP ELECT 100MF/16V
C418	1-107-826-11	s	CAPACITOR,CHIP CERAMIC 0.1MF
C419	1-107-826-11	s	CAPACITOR,CHIP CERAMIC 0.1MF
C420	1-107-826-11	s	CAPACITOR,CHIP CERAMIC 0.1MF
C421	1-107-826-11	s	CAPACITOR,CHIP CERAMIC 0.1MF
C422	1-107-826-11	s	CAPACITOR,CHIP CERAMIC 0.1MF

(SY-259B BOARD)

Ref. No. or Q'ty	Part No.	SP	Description
C500	1-107-826-11	s	CAPACITOR,CHIP CERAMIC 0.1MF
C501	1-107-826-11	s	CAPACITOR,CHIP CERAMIC 0.1MF
C502	1-107-826-11	s	CAPACITOR,CHIP CERAMIC 0.1MF
C503	1-107-826-11	s	CAPACITOR,CHIP CERAMIC 0.1MF
C504	1-107-826-11	s	CAPACITOR,CHIP CERAMIC 0.1MF
C505	1-107-826-11	s	CAPACITOR,CHIP CERAMIC 0.1MF
C506	1-104-823-11	s	CAPACITOR,CHIP TANTAL 47MF/16V
CN1	1-779-746-21	s	CONNECTOR, BOARD TO BOARD 50P
CN2	1-580-056-21	o	PIN, CONNECTOR 3P
CN3	1-569-775-21	o	PIN, CONNECTOR 5P
CN4	1-580-057-11	o	PIN, CONNECTOR 4P
CN12	1-695-453-11	s	CONNECTOR,BOARD TO BOARD 50P
D100	8-719-024-81	s	DIODE 1SS300-TE85L
D200	8-719-024-81	s	DIODE 1SS300-TE85L
D201	8-719-987-43	s	LED CL-150PG-CD
D202	8-719-987-43	s	LED CL-150PG-CD
D203	8-719-987-43	s	LED CL-150PG-CD
D204	8-719-989-22	s	LED CL-150R-CD
IC1	8-759-271-86	s	IC TC7SH04FU
IC2	8-759-485-20	s	IC M5M5408ATP-55LL-EL
IC3	8-759-485-20	s	IC M5M5408ATP-55LL-EL
IC4	8-759-485-20	s	IC M5M5408ATP-55LL-EL
IC5	8-759-485-20	s	IC M5M5408ATP-55LL-EL
IC100	8-759-252-55	s	IC S-80745SL-A9
IC101	8-759-277-63	s	IC TC7W14FU (TE12R)
IC102	8 759 524 27	s	IC TC74VHC244FT(EL)
IC103	8-759-082-57	s	IC TC7W04FU
IC104	8-759-082-58	s	IC TC7W08FU
IC105	8-759-524-18	s	IC TC74VHC163FT(EL)
IC106	8-759-485-19	s	IC IDT79R3041-20PF
IC107	8-759-524-28	s	IC TC74VHC245FT(EL)
IC108	8-759-524-51	s	IC TC74VHC573FT (EL)
IC109	8-759-524-51	s	IC TC74VHC573FT (EL)
IC110	8-759-524-51	s	IC TC74VHC573FT (EL)
IC111	8-759-524-51	s	IC TC74VHC573FT (EL)
IC112	8-759-296-31	s	IC M48T18-100MH1TR
IC113	8-759-271-86	s	IC TC7SH04FU
IC115	8-759-082-59	s	IC TC7W32FU
IC117	8-759-429-27	s	IC CXD9001AR
IC118	8-759-447-77	s	IC TC7WH74FU (TR12R)
IC119	8-759-271-86	s	IC TC7SH04FU
IC120	8-759-524-08	s	IC TC74VHC139FT(EL)
IC121	8-759-196-96	s	IC TC7SH08FU (TE85R)
IC122	8-759-196-97	s	IC TC7SH32FU (TE85R)
IC123	8-759-196-97	s	IC TC7SH32FU (TE85R)
IC126	8-759-049-79	s	IC SN74HC245APWR
IC127	8-759-051-49	s	IC SN74HCT541APW (R)
IC200	8-759-082-59	s	IC TC7W32FU
IC201	8-759-190-79	s	IC UPD72001GC-11-3B6
IC202	8-759-082-57	s	IC TC7W04FU
IC203	8-759-524-25	o	IC TC7WH241FU(TE12R)
IC204	8-759-092-26	s	IC DS3691M
IC206	8-759-082-58	s	IC TC7W08FU
IC207	8-759-923-64	s	IC AM26LS32ACNS
IC208	8-759-196-96	s	IC TC7SH08FU (TE85R)
IC209	8-759-049-76	s	IC SN74HC244APW (E05)
IC210	8-759-082-61	s	IC TC4W53FU
IC211	8-759-049-96	s	IC SN74HC32APW

(SY-259B BOARD)

Ref. No. or Q'ty	Part No.	SP	Description
IC212	8-759-082-58	s	IC TC7W08FU
IC213	8-759-252-59	s	IC MAX202CSE
IC214	8-759-082-61	s	IC TC4W53FU
IC300	8-759-049-98	s	IC SN74HC74APW
IC301	8-759-049-60	s	IC SN74HC08APW
IC302	8-759-050-00	s	IC SN74HC86APW
IC303	8-759-271-86	s	IC TC7SH04FU
IC304	8-759-049-96	s	IC SN74HC32APW
IC305	8-759-050-12	s	IC SN74HC174APW (E05)
IC306	8-759-049-60	s	IC SN74HC08APW
IC307	8-759-545-80	s	IC LC3564BM-70-TLM
IC308	8-759-175-56	s	IC CXD8804Q
IC309	8-759-539-53	s	IC MB90096PF-G-139-BND(ER)
IC330	8-759-497-38	s	IC LTC1458CG-E2
IC400	8-759-973-43	s	IC MB8421-90LPFQ
IC401	8-759-271-86	s	IC TC7SH04FU
IC402	8-759-391-30	s	IC 74LVX3245QSCX
IC403	8-759-391-30	s	IC 74LVX3245QSCX
IC404	8-759-391-30	s	IC 74LVX3245QSCX
IC500	8-759-049-88	s	IC SN74HCT245APW (E05)
IC501	8-759-049-88	s	IC SN74HCT245APW (E05)
IC502	8-759-049-88	s	IC SN74HCT245APW (E05)
IC503	8-759-049-88	s	IC SN74HCT245APW (E05)
IC504	8-759-049-88	s	IC SN74HCT245APW (E05)
IS114	1-540-151-21	s	SOCKET, IC
IS116	1-540-151-21	s	SOCKET, IC
L400	1-409-579-11	s	COIL, CHOKE 8.2UH
L401	1-409-579-11	s	COIL, CHOKE 8.2UH
Q200	8-729-924-62	s	TRANSISTOR DTC113ZU
Q201	8-729-924-62	s	TRANSISTOR DTC113ZU
Q202	8-729-924-62	s	TRANSISTOR DTC113ZU
Q203	8-729-924-62	s	TRANSISTOR DTC113ZU
R100	1-218-660-91	s	RESISTOR CHIP 47 1/16W (1608)
R101	1-218-708-11	s	RESISTOR,CHIP 4.7K 1/16W(1608)
R102	1-218-668-11	s	RESISTOR,CHIP 100 1/16W (1608)
R103	1-218-716-11	s	RESISTOR,CHIP 10K 1/16W(1608)
R104	1-216-864-11	s	RESISTOR,CHIP 0 1/16W (1608)
R105	1-218-732-11	s	RESISTOR,CHIP 47K 1/16W(1608)
R106	1-218-716-11	s	RESISTOR,CHIP 10K 1/16W(1608)
R107	1-218-716-11	s	RESISTOR,CHIP 10K 1/16W(1608)
R108	1-218-716-11	s	RESISTOR,CHIP 10K 1/16W(1608)
R109	1-218-692-11	s	RESISTOR,CHIP 1.0K 1/16W(1608)
R110	1-218-716-11	s	RESISTOR,CHIP 10K 1/16W(1608)
R111	1-218-716-11	s	RESISTOR,CHIP 10K 1/16W(1608)
R112	1-218-716-11	s	RESISTOR,CHIP 10K 1/16W(1608)
R113	1-218-716-11	s	RESISTOR,CHIP 10K 1/16W(1608)
R114	1-218-716-11	s	RESISTOR,CHIP 10K 1/16W(1608)
R115	1-218-716-11	s	RESISTOR,CHIP 10K 1/16W(1608)
R116	1-218-708-11	s	RESISTOR,CHIP 4.7K 1/16W(1608)
R117	1-218-708-11	s	RESISTOR,CHIP 4.7K 1/16W(1608)
R118	1-218-708-11	s	RESISTOR,CHIP 4.7K 1/16W(1608)
R119	1-218-708-11	s	RESISTOR,CHIP 4.7K 1/16W(1608)
R120	1-218-708-11	s	RESISTOR,CHIP 4.7K 1/16W(1608)
R121	1-218-660-91	s	RESISTOR CHIP 47 1/16W (1608)
R122	1-218-660-91	s	RESISTOR CHIP 47 1/16W (1608)
R123	1-218-668-11	s	RESISTOR,CHIP 100 1/16W (1608)
R124	1-218-716-11	s	RESISTOR,CHIP 10K 1/16W(1608)

(SY-259B BOARD)

Ref. No. or Q'ty	Part No.	SP	Description
R125	1-218-716-11	s	RESISTOR,CHIP 10K 1/16W(1608)
R126	1-218-716-11	s	RESISTOR,CHIP 10K 1/16W(1608)
R133	1-216-864-11	s	RESISTOR,CHIP 0 1/16W (1608)
R135	1-216-864-11	s	RESISTOR,CHIP 0 1/16W (1608)
R136	1-216-864-11	s	RESISTOR,CHIP 0 1/16W (1608)
R137	1-216-864-11	s	RESISTOR,CHIP 0 1/16W (1608)
R138	1-218-716-11	s	RESISTOR,CHIP 10K 1/16W(1608)
R139	1-218-716-11	s	RESISTOR,CHIP 10K 1/16W(1608)
R140	1-218-668-11	s	RESISTOR,CHIP 100 1/16W (1608)
R142	1-218-652-11	s	RESISTOR,CHIP 22 1/16W (1608)
R144	1-218-668-11	s	RESISTOR,CHIP 100 1/16W (1608)
R200	1-218-716-11	s	RESISTOR,CHIP 10K 1/16W(1608)
R201	1-218-704-11	s	RESISTOR,CHIP 3.3K 1/16W(1608)
R202	1-218-716-11	s	RESISTOR,CHIP 10K 1/16W(1608)
R203	1-218-716-11	s	RESISTOR,CHIP 10K 1/16W(1608)
R204	1-218-716-11	s	RESISTOR,CHIP 10K 1/16W(1608)
R205	1-218-716-11	s	RESISTOR,CHIP 10K 1/16W(1608)
R206	1-218-668-11	s	RESISTOR,CHIP 100 1/16W (1608)
R207	1-218-692-11	s	RESISTOR,CHIP 1.0K 1/16W(1608)
R208	1-218-732-11	s	RESISTOR,CHIP 47K 1/16W(1608)
R209	1-218-652-11	s	RESISTOR,CHIP 22 1/16W (1608)
R214	1-218-740-11	s	RESISTOR,CHIP 100K 1/16W(1608)
R215	1-218-740-11	s	RESISTOR,CHIP 100K 1/16W(1608)
R216	1-218-732-11	s	RESISTOR,CHIP 47K 1/16W(1608)
R217	1-218-720-11	s	RESISTOR,CHIP 15K 1/16W(1608)
R218	1-218-720-11	s	RESISTOR,CHIP 15K 1/16W(1608)
R219	1-218-740-11	s	RESISTOR,CHIP 100K 1/16W(1608)
R220	1-218-740-11	s	RESISTOR,CHIP 100K 1/16W(1608)
R221	1-218-720-11	s	RESISTOR,CHIP 15K 1/16W(1608)
R222	1-218-720-11	s	RESISTOR,CHIP 15K 1/16W(1608)
R225	1-218-652-11	s	RESISTOR,CHIP 22 1/16W (1608)
R226	1-218-652-11	s	RESISTOR,CHIP 22 1/16W (1608)
R231	1-218-716-11	s	RESISTOR,CHIP 10K 1/16W(1608)
R243	1-218-716-11	s	RESISTOR,CHIP 10K 1/16W(1608)
R244	1-218-716-11	s	RESISTOR,CHIP 10K 1/16W(1608)
R245	1-218-732-11	s	RESISTOR,CHIP 47K 1/16W(1608)
R246	1-218-716-11	s	RESISTOR,CHIP 10K 1/16W(1608)
R247	1-218-716-11	s	RESISTOR,CHIP 10K 1/16W(1608)
R248	1-218-716-11	s	RESISTOR,CHIP 10K 1/16W(1608)
R249	1-218-716-11	s	RESISTOR,CHIP 10K 1/16W(1608)
R250	1-218-716-11	s	RESISTOR,CHIP 10K 1/16W(1608)
R251	1-218-716-11	s	RESISTOR,CHIP 10K 1/16W(1608)
R252	1-216-864-11	s	RESISTOR,CHIP 0 1/16W (1608)
R253	1-218-716-11	s	RESISTOR,CHIP 10K 1/16W(1608)
R254	1-218-716-11	s	RESISTOR,CHIP 10K 1/16W(1608)
R255	1-218-740-11	s	RESISTOR,CHIP 100K 1/16W(1608)
R256	1-218-740-11	s	RESISTOR,CHIP 100K 1/16W(1608)
R257	1-218-740-11	s	RESISTOR,CHIP 100K 1/16W(1608)
R258	1-218-668-11	s	RESISTOR,CHIP 100 1/16W (1608)
R259	1-218-740-11	s	RESISTOR,CHIP 100K 1/16W(1608)
R260	1-218-692-11	s	RESISTOR,CHIP 1.0K 1/16W(1608)
R261	1-218-732-11	s	RESISTOR,CHIP 47K 1/16W(1608)
R262	1-218-652-11	s	RESISTOR,CHIP 22 1/16W (1608)
R263	1-218-652-11	s	RESISTOR,CHIP 22 1/16W (1608)
R264	1-218-732-11	s	RESISTOR,CHIP 47K 1/16W(1608)
R265	1-218-732-11	s	RESISTOR,CHIP 47K 1/16W(1608)
R266	1-218-732-11	s	RESISTOR,CHIP 47K 1/16W(1608)
R268	1-218-692-11	s	RESISTOR,CHIP 1.0K 1/16W(1608)
R269	1-218-732-11	s	RESISTOR,CHIP 47K 1/16W(1608)

(SY-259B BOARD)

Ref. No. or Q'ty	Part No.	SP	Description
R270	1-218-732-11	s	RESISTOR,CHIP 47K 1/16W(1608)
R272	1-218-692-11	s	RESISTOR,CHIP 1.0K 1/16W(1608)
R273	1-218-692-11	s	RESISTOR,CHIP 1.0K 1/16W(1608)
R274	1-218-692-11	s	RESISTOR,CHIP 1.0K 1/16W(1608)
R275	1-218-652-11	s	RESISTOR,CHIP 22 1/16W (1608)
R276	1-218-652-11	s	RESISTOR,CHIP 22 1/16W (1608)
R277	1-218-652-11	s	RESISTOR,CHIP 22 1/16W (1608)
R281	1-218-652-11	s	RESISTOR,CHIP 22 1/16W (1608)
R282	1-218-652-11	s	RESISTOR,CHIP 22 1/16W (1608)
R283	1-218-652-11	s	RESISTOR,CHIP 22 1/16W (1608)
R284	1-218-652-11	s	RESISTOR,CHIP 22 1/16W (1608)
R285	1-218-692-11	s	RESISTOR,CHIP 1.0K 1/16W(1608)
R286	1-218-716-11	s	RESISTOR,CHIP 10K 1/16W(1608)
R287	1-218-668-11	s	RESISTOR,CHIP 100 1/16W (1608)
R288	1-218-692-11	s	RESISTOR,CHIP 1.0K 1/16W(1608)
R289	1-218-716-11	s	RESISTOR,CHIP 10K 1/16W(1608)
R300	1-218-740-11	s	RESISTOR,CHIP 100K 1/16W(1608)
R301	1-218-668-11	s	RESISTOR,CHIP 100 1/16W (1608)
R302	1-218-652-11	s	RESISTOR,CHIP 22 1/16W (1608)
R303	1-218-668-11	s	RESISTOR,CHIP 100 1/16W (1608)
R304	1-218-668-11	s	RESISTOR,CHIP 100 1/16W (1608)
R307	1-216-864-11	s	RESISTOR,CHIP 0 1/16W (1608)
R308	1-216-864-11	s	RESISTOR,CHIP 0 1/16W (1608)
R309	1-216-864-11	s	RESISTOR,CHIP 0 1/16W (1608)
R310	1-218-732-11	s	RESISTOR,CHIP 47K 1/16W(1608)
R311	1-216-864-11	s	RESISTOR,CHIP 0 1/16W (1608)
R312	1-218-668-11	s	RESISTOR,CHIP 100 1/16W (1608)
R313	1-218-668-11	s	RESISTOR,CHIP 100 1/16W (1608)
R314	1-218-668-11	s	RESISTOR,CHIP 100 1/16W (1608)
R315	1-218-668-11	s	RESISTOR,CHIP 100 1/16W (1608)
R316	1-218-668-11	s	RESISTOR,CHIP 100 1/16W (1608)
R317	1-218-732-11	s	RESISTOR,CHIP 47K 1/16W(1608)
R318	1-216-864-11	s	RESISTOR,CHIP 0 1/16W (1608)
R319	1-218-652-11	s	RESISTOR,CHIP 22 1/16W (1608)
R320	1-218-652-11	s	RESISTOR,CHIP 22 1/16W (1608)
R321	1-216-864-11	s	RESISTOR,CHIP 0 1/16W (1608)
R322	1-218-668-11	s	RESISTOR,CHIP 100 1/16W (1608)
R323	1-218-732-11	s	RESISTOR,CHIP 47K 1/16W(1608)
R324	1-218-652-11	s	RESISTOR,CHIP 22 1/16W (1608)
R325	1-216-864-11	s	RESISTOR,CHIP 0 1/16W (1608)
R326	1-216-864-11	s	RESISTOR,CHIP 0 1/16W (1608)
R327	1-216-864-11	s	RESISTOR,CHIP 0 1/16W (1608)
R330	1-216-864-11	s	RESISTOR,CHIP 0 1/16W (1608)
R331	1-218-704-11	s	RESISTOR,CHIP 3.3K 1/16W(1608)
R332	1-216-864-11	s	RESISTOR,CHIP 0 1/16W (1608)
R333	1-216-864-11	s	RESISTOR,CHIP 0 1/16W (1608)
R334	1-218-683-11	s	RESISTOR CHIP 430 1/16W (1608)
R335	1-218-680-11	s	RESISTOR,CHIP 330 1/16W(1608)
R400	1-216-864-11	s	RESISTOR,CHIP 0 1/16W (1608)
R401	1-218-668-11	s	RESISTOR,CHIP 100 1/16W (1608)
R402	1-216-864-11	s	RESISTOR,CHIP 0 1/16W (1608)
R403	1-218-668-11	s	RESISTOR,CHIP 100 1/16W (1608)
R404	1-216-864-11	s	RESISTOR,CHIP 0 1/16W (1608)
R405	1-216-864-11	s	RESISTOR,CHIP 0 1/16W (1608)
R406	1-216-864-11	s	RESISTOR,CHIP 0 1/16W (1608)
R407	1-216-864-11	s	RESISTOR,CHIP 0 1/16W (1608)
R408	1-216-864-11	s	RESISTOR,CHIP 0 1/16W (1608)
R409	1-216-864-11	s	RESISTOR,CHIP 0 1/16W (1608)
R410	1-216-864-11	s	RESISTOR,CHIP 0 1/16W (1608)

(SY-259B BOARD)

Ref. No. or Q'ty	Part No.	SP	Description
R411	1-216-864-11	s	RESISTOR,CHIP 0 1/16W (1608)
R412	1-216-864-11	s	RESISTOR,CHIP 0 1/16W (1608)
R413	1-218-660-91	s	RESISTOR CHIP 47 1/16W (1608)
R414	1-218-660-91	s	RESISTOR CHIP 47 1/16W (1608)
R415	1-218-660-91	s	RESISTOR CHIP 47 1/16W (1608)
R418	1-218-668-11	s	RESISTOR,CHIP 100 1/16W (1608)
R419	1-218-668-11	s	RESISTOR,CHIP 100 1/16W (1608)
R420	1-218-668-11	s	RESISTOR,CHIP 100 1/16W (1608)
R421	1-216-864-11	s	RESISTOR,CHIP 0 1/16W (1608)
R422	1-218-668-11	s	RESISTOR,CHIP 100 1/16W (1608)
R423	1-218-668-11	s	RESISTOR,CHIP 100 1/16W (1608)
R424	1-218-668-11	s	RESISTOR,CHIP 100 1/16W (1608)
R425	1-218-668-11	s	RESISTOR,CHIP 100 1/16W (1608)
R426	1-218-668-11	s	RESISTOR,CHIP 100 1/16W (1608)
R427	1-218-668-11	s	RESISTOR,CHIP 100 1/16W (1608)
R428	1-218-668-11	s	RESISTOR,CHIP 100 1/16W (1608)
R429	1-218-668-11	s	RESISTOR,CHIP 100 1/16W (1608)
R430	1-218-732-11	s	RESISTOR,CHIP 47K 1/16W(1608)
R431	1-216-864-11	s	RESISTOR,CHIP 0 1/16W (1608)
R432	1-216-864-11	s	RESISTOR,CHIP 0 1/16W (1608)
R500	1-218-692-11	s	RESISTOR,CHIP 1.0K 1/16W(1608)
R501	1-218-692-11	s	RESISTOR,CHIP 1.0K 1/16W(1608)
R502	1-218-692-11	s	RESISTOR,CHIP 1.0K 1/16W(1608)
R503	1-218-668-11	s	RESISTOR,CHIP 100 1/16W (1608)
R504	1-216-864-11	s	RESISTOR,CHIP 0 1/16W (1608)
R505	1-218-716-11	s	RESISTOR,CHIP 10K 1/16W(1608)
R506	1-218-740-11	s	RESISTOR,CHIP 100K 1/16W(1608)
R507	1-218-740-11	s	RESISTOR,CHIP 100K 1/16W(1608)
R508	1-218-740-11	s	RESISTOR,CHIP 100K 1/16W(1608)
R509	1-218-668-11	s	RESISTOR,CHIP 100 1/16W (1608)
R510	1-218-692-11	s	RESISTOR,CHIP 1.0K 1/16W(1608)
R511	1-218-668-11	s	RESISTOR,CHIP 100 1/16W (1608)
R512	1-218-668-11	s	RESISTOR,CHIP 100 1/16W (1608)
RB100	1-236-908-11	s	RESISTOR,NETWORK 10K (3216)
RB101	1-233-270-11	o	RESISTOR,NETWORK (8 GANG) 10K
RB103	1-233-663-91	s	NETWORK, RES (8 GANG) 4.7K
RB104	1-233-663-91	s	NETWORK, RES (8 GANG) 4.7K
RB105	1-233-663-91	s	NETWORK, RES (8 GANG) 4.7K
RB106	1-233-663-91	s	NETWORK, RES (8 GANG) 4.7K
RB107	1-233-477-11	s	NETWORK, RES (8 GANG) 1K
RB108	1-233-663-91	s	NETWORK, RES (8 GANG) 4.7K
RB109	1-233-663-91	s	NETWORK, RES (8 GANG) 4.7K
RB110	1-233-663-91	s	NETWORK, RES (8 GANG) 4.7K
RB111	1-233-663-91	s	NETWORK, RES (8 GANG) 4.7K
RB200	1-233-270-11	o	RESISTOR, NETWORK (8 GANG) 10K
RB201	1-233-665-11	s	NETWORK, RES (8 GANG) 47K
RB202	1-233-665-11	s	NETWORK, RES (8 GANG) 47K
RB203	1-233-665-11	s	NETWORK, RES (8 GANG) 47K
RB301	1-233-665-11	s	NETWORK, RES (8 GANG) 47K
RB302	1-233-665-11	s	NETWORK, RES (8 GANG) 47K
RB304	1-233-665-11	s	NETWORK, RES (8 GANG) 47K
RB400	1-233-665-11	s	NETWORK, RES (8 GANG) 47K
RB401	1-233-665-11	s	NETWORK, RES (8 GANG) 47K
RB402	1-233-665-11	s	NETWORK, RES (8 GANG) 47K
RB403	1-233-665-11	s	NETWORK, RES (8 GANG) 47K
RB404	1-233-665-11	s	NETWORK, RES (8 GANG) 47K
RB405	1-233-665-11	s	NETWORK, RES (8 GANG) 47K
RB500	1-239-412-11	s	NETWORK, RESISTOR 100 (1608)

(SY-259B BOARD)

Ref. No. or Q'ty	Part No.	SP	Description
RB501	1-239-412-11	s	NETWORK, RESISTOR 100 (1608)
RB502	1-239-412-11	s	NETWORK, RESISTOR 100 (1608)
RB503	1-239-412-11	s	NETWORK, RESISTOR 100 (1608)
RB504	1-239-412-11	s	NETWORK, RESISTOR 100 (1608)
RB505	1-239-412-11	s	NETWORK, RESISTOR 100 (1608)
RB506	1-239-412-11	s	NETWORK, RESISTOR 100 (1608)
RB507	1-233-665-11	s	NETWORK, RES (8 GANG) 47K
S100	1-572-474-11	s	SWITCH, TACTILE
S200	1-572-473-11	s	SWITCH, TACTILE
S201	1-692-271-31	s	SWITCH, SLIDE
S202	1-692-271-31	s	SWITCH, SLIDE
X100	1-760-528-11	s	OSCILLATOR, CRYSTAL
X200	1-767-716-11	s	OSCILLATOR, CRYSTAL

SY-260 BOARD

Ref. No. or Q'ty	Part No.	SP	Description
1pc	A-8316-680-A	o	MOUNTED CIRCUIT BOARD, SY-260
5pcs	3-729-061-01	s	SCREW (M2X4.5) (TYPE 1)(STEEL)
2pcs	3-603-737-01	o	LEVER,BOARD
5pcs	3-729-061-01	s	SCREW (M2X4.5) (TYPE 1)(STEEL)
C1	1-107-826-11	s	CAPACITOR,CHIP CERAMIC 0.1MF
C2	1-107-826-11	s	CAPACITOR,CHIP CERAMIC 0.1MF
C3	1-107-826-11	s	CAPACITOR,CHIP CERAMIC 0.1MF
C4	1-107-826-11	s	CAPACITOR,CHIP CERAMIC 0.1MF
C5	1-107-826-11	s	CAPACITOR,CHIP CERAMIC 0.1MF
C101	1-107-826-11	s	CAPACITOR,CHIP CERAMIC 0.1MF
C102	1-107-826-11	s	CAPACITOR,CHIP CERAMIC 0.1MF
C103	1-104-851-11	s	CAPACITOR,TANTALUM 10MF/10V
C104	1-164-227-11	s	CAPACITOR,CERAMIC 0.022MF/25V
C105	1-107-826-11	s	CAPACITOR,CHIP CERAMIC 0.1MF
C106	1-107-826-11	s	CAPACITOR,CHIP CERAMIC 0.1MF
C107	1-107-826-11	s	CAPACITOR,CHIP CERAMIC 0.1MF
C108	1-107-826-11	s	CAPACITOR,CHIP CERAMIC 0.1MF
C109	1-107-826-11	s	CAPACITOR,CHIP CERAMIC 0.1MF
C111	1-107-826-11	s	CAPACITOR,CHIP CERAMIC 0.1MF
C112	1-107-826-11	s	CAPACITOR,CHIP CERAMIC 0.1MF
C113	1-107-826-11	s	CAPACITOR,CHIP CERAMIC 0.1MF
C114	1-107-826-11	s	CAPACITOR,CHIP CERAMIC 0.1MF
C115	1-107-826-11	s	CAPACITOR,CHIP CERAMIC 0.1MF
C116	1-107-826-11	s	CAPACITOR,CHIP CERAMIC 0.1MF
C117	1-107-826-11	s	CAPACITOR,CHIP CERAMIC 0.1MF
C118	1-107-826-11	s	CAPACITOR,CHIP CERAMIC 0.1MF
C119	1 107 826 11	s	CAPACITOR,CHIP CERAMIC 0.1MF
C120	1-107-826-11	s	CAPACITOR,CHIP CERAMIC 0.1MF
C121	1-162-923-11	s	CAPACITOR,CERAMIC 47PF/50V CH
C122	1-162-923-11	s	CAPACITOR,CERAMIC 47PF/50V CH
C123	1-107-826-11	s	CAPACITOR,CHIP CERAMIC 0.1MF
C124	1-107-826-11	s	CAPACITOR,CHIP CERAMIC 0.1MF
C125	1-107-826-11	s	CAPACITOR,CHIP CERAMIC 0.1MF
C126	1-107-826-11	s	CAPACITOR,CHIP CERAMIC 0.1MF
C127	1-107-826-11	s	CAPACITOR,CHIP CERAMIC 0.1MF
C128	1-107-826-11	s	CAPACITOR,CHIP CERAMIC 0.1MF
C129	1-107-826-11	s	CAPACITOR,CHIP CERAMIC 0.1MF
C130	1-107-826-11	s	CAPACITOR,CHIP CERAMIC 0.1MF
C131	1-107-826-11	s	CAPACITOR,CHIP CERAMIC 0.1MF
C132	1-107-826-11	s	CAPACITOR,CHIP CERAMIC 0.1MF
C133	1-107-826-11	s	CAPACITOR,CHIP CERAMIC 0.1MF
C134	1-107-826-11	s	CAPACITOR,CHIP CERAMIC 0.1MF
C135	1-107-826-11	s	CAPACITOR,CHIP CERAMIC 0.1MF
C136	1-107-826-11	s	CAPACITOR,CHIP CERAMIC 0.1MF
C138	1-107-826-11	s	CAPACITOR,CHIP CERAMIC 0.1MF
C140	1-107-826-11	s	CAPACITOR,CHIP CERAMIC 0.1MF
C141	1-107-826-11	s	CAPACITOR,CHIP CERAMIC 0.1MF
C142	1-107-826-11	s	CAPACITOR,CHIP CERAMIC 0.1MF
C145	1-113-991-11	s	CAPACITOR TANTALUM 33MF/16V
C146	1-113-991-11	s	CAPACITOR TANTALUM 33MF/16V
C201	1-162-919-11	s	CAPACITOR,CERAMIC 22PF/50V CH
C202	1-162-919-11	s	CAPACITOR,CERAMIC 22PF/50V CH
C203	1-107-826-11	s	CAPACITOR,CHIP CERAMIC 0.1MF
C204	1-107-826-11	s	CAPACITOR,CHIP CERAMIC 0.1MF
C205	1-107-826-11	s	CAPACITOR,CHIP CERAMIC 0.1MF
C206	1-107-826-11	s	CAPACITOR,CHIP CERAMIC 0.1MF
C207	1-107-826-11	s	CAPACITOR,CHIP CERAMIC 0.1MF
C208	1-107-826-11	s	CAPACITOR,CHIP CERAMIC 0.1MF
C209	1-107-826-11	s	CAPACITOR,CHIP CERAMIC 0.1MF

(SY-260 BOARD)

Ref. No. or Q'ty	Part No.	SP	Description
C210	1-107-826-11	s	CAPACITOR,CHIP CERAMIC 0.1MF
C211	1-107-826-11	s	CAPACITOR,CHIP CERAMIC 0.1MF
C212	1-107-826-11	s	CAPACITOR,CHIP CERAMIC 0.1MF
C213	1-107-826-11	s	CAPACITOR,CHIP CERAMIC 0.1MF
C214	1-107-826-11	s	CAPACITOR,CHIP CERAMIC 0.1MF
C215	1-107-826-11	s	CAPACITOR,CHIP CERAMIC 0.1MF
C216	1-107-826-11	s	CAPACITOR,CHIP CERAMIC 0.1MF
C217	1-107-826-11	s	CAPACITOR,CHIP CERAMIC 0.1MF
C218	1-107-826-11	s	CAPACITOR,CHIP CERAMIC 0.1MF
C219	1-107-826-11	s	CAPACITOR,CHIP CERAMIC 0.1MF
C220	1-107-826-11	s	CAPACITOR,CHIP CERAMIC 0.1MF
C221	1-107-826-11	s	CAPACITOR,CHIP CERAMIC 0.1MF
C222	1-107-826-11	s	CAPACITOR,CHIP CERAMIC 0.1MF
C223	1-107-826-11	s	CAPACITOR,CHIP CERAMIC 0.1MF
C224	1-113-991-11	s	CAPACITOR TANTALUM 33MF/16V
C226	1-113-991-11	s	CAPACITOR TANTALUM 33MF/16V
C301	1-107-826-11	s	CAPACITOR,CHIP CERAMIC 0.1MF
C302	1-107-826-11	s	CAPACITOR,CHIP CERAMIC 0.1MF
C303	1-107-826-11	s	CAPACITOR,CHIP CERAMIC 0.1MF
C304	1-107-826-11	s	CAPACITOR,CHIP CERAMIC 0.1MF
C305	1-107-826-11	s	CAPACITOR,CHIP CERAMIC 0.1MF
C310	1-107-826-11	s	CAPACITOR,CHIP CERAMIC 0.1MF
C311	1-113-991-11	s	CAPACITOR TANTALUM 33MF/16V
C312	1-107-826-11	s	CAPACITOR,CHIP CERAMIC 0.1MF
C401	1-107-826-11	s	CAPACITOR,CHIP CERAMIC 0.1MF
C402	1-107-826-11	s	CAPACITOR,CHIP CERAMIC 0.1MF
C403	1 107 826 11	s	CAPACITOR,CHIP CERAMIC 0.1MF
C410	1-107-826-11	s	CAPACITOR,CHIP CERAMIC 0.1MF
C411	1-107-826-11	s	CAPACITOR,CHIP CERAMIC 0.1MF
C412	1-107-826-11	s	CAPACITOR,CHIP CERAMIC 0.1MF
C413	1-107-826-11	s	CAPACITOR,CHIP CERAMIC 0.1MF
C414	1-113-991-11	s	CAPACITOR TANTALUM 33MF/16V
C415	1-107-826-11	s	CAPACITOR,CHIP CERAMIC 0.1MF
C450	1-107-826-11	s	CAPACITOR,CHIP CERAMIC 0.1MF
C451	1-107-826-11	s	CAPACITOR,CHIP CERAMIC 0.1MF
C452	1-107-826-11	s	CAPACITOR,CHIP CERAMIC 0.1MF
C453	1-107-826-11	s	CAPACITOR,CHIP CERAMIC 0.1MF
C454	1-107-826-11	s	CAPACITOR,CHIP CERAMIC 0.1MF
C455	1-107-826-11	s	CAPACITOR,CHIP CERAMIC 0.1MF
C456	1-107-826-11	s	CAPACITOR,CHIP CERAMIC 0.1MF
C457	1-107-826-11	s	CAPACITOR,CHIP CERAMIC 0.1MF
C458	1-107-826-11	s	CAPACITOR,CHIP CERAMIC 0.1MF
C459	1-107-826-11	s	CAPACITOR,CHIP CERAMIC 0.1MF
C501	1-115-581-11	s	CAPACITOR CHIP ELECT 100MF/16V
C502	1-115-581-11	s	CAPACITOR CHIP ELECT 100MF/16V
C503	1-107-826-11	s	CAPACITOR,CHIP CERAMIC 0.1MF
C504	1-115-581-11	s	CAPACITOR CHIP ELECT 100MF/16V
C505	1-115-581-11	s	CAPACITOR CHIP ELECT 100MF/16V
C506	1-107-826-11	s	CAPACITOR,CHIP CERAMIC 0.1MF
C507	1-115-581-11	s	CAPACITOR CHIP ELECT 100MF/16V
C508	1-115-581-11	s	CAPACITOR CHIP ELECT 100MF/16V
C509	1-107-826-11	s	CAPACITOR,CHIP CERAMIC 0.1MF
C510	1-115-581-11	s	CAPACITOR CHIP ELECT 100MF/16V
C511	1-115-581-11	s	CAPACITOR CHIP ELECT 100MF/16V
C512	1-107-826-11	s	CAPACITOR,CHIP CERAMIC 0.1MF
CN22	1-695-453-11	s	CONNECTOR,BOARD TO BOARD 50P
CN202	1-569-775-21	o	PIN, CONNECTOR 5P
CN203	1-580-056-21	o	PIN, CONNECTOR 3P

(SY-260 BOARD)

Ref. No. or Q'ty	Part No.	SP	Description
D101	8-719-024-81	s	DIODE 1SS300-TE85L
D201	8-719-987-43	s	LED CL-150PG-CD
D202	8-719-987-43	s	LED CL-150PG-CD
D203	8-719-987-43	s	LED CL-150PG-CD
D204	8-719-989-22	s	LED CL-150R-CD
FL501	1-117-193-11	s	CAPACITOR,3 TERMINAL 1.5MF/50V
FL502	1-117-193-11	s	CAPACITOR,3 TERMINAL 1.5MF/50V
IC1	8-759-271-86	s	IC TC7SH04FU
IC2	8-759-648-63	s	IC KM684000BLT-5LT
IC3	8-759-648-63	s	IC KM684000BLT-5LT
IC4	8-759-648-63	s	IC KM684000BLT-5LT
IC5	8-759-648-63	s	IC KM684000BLT-5LT
IC101	8-759-074-51	s	IC S-8054HNM-CQ-T1
IC102	8-759-082-57	s	IC TC7W04FU
IC103	8-759-277-63	s	IC TC7W14FU (TE12R)
IC104	8-759-524-18	s	IC TC74VHC163FT(EL)
IC105	8-759-524-18	s	IC TC74VHC163FT(EL)
IC106	8-759-082-58	s	IC TC7W08FU
IC107	8-759-926-18	s	IC SN74HC157ANS
IC108	8-759-485-19	s	IC IDT79R3041-20PF
IC109	8-759-049-76	s	IC SN74HC244APW (E05)
IC110	8-759-524-28	s	IC TC74VHC245FT(EL)
IC111	8-759-524-51	s	IC TC74VHC573FT (EL)
IC112	8-759-524-51	s	IC TC74VHC573FT (EL)
IC113	8-759-524-51	s	IC TC74VHC573FT (EL)
IC114	8-759-524-51	s	IC TC74VHC573FT (EL)
IC115	8 759 645 41	o	IC SY260 IC115 SY2 V3.20
IC116	8-759-429-27	s	IC CXD9001AR
IC117	8-759-447-77	s	IC TC7WH74FU (TR12R)
IC118	8-759-271-86	s	IC TC7SH04FU
IC119	8-759-523-94	s	IC TC74VHC32FT(EL)
IC120	8-759-524-07	s	IC TC74VHC138FT(EL)
IC121	8-759-524-07	s	IC TC74VHC138FT(EL)
IC122	8-759-523-92	s	IC TC74VHC21FT(EL)
IC123	8-759-523-94	s	IC TC74VHC32FT(EL)
IC126	8-759-271-86	s	IC TC7SH04FU
IC202	8-759-277-63	s	IC TC7W14FU (TE12R)
IC203	8-759-175-77	s	IC CXD8384Q
IC204	8-759-390-68	s	IC CXD8990R
IC206	8-759-195-81	s	IC TC7S86FU
IC207	8-759-049-98	s	IC SN74HC74APW
IC208	8-759-195-81	s	IC TC7S86FU
IC210	8-759-049-59	s	IC SN74HC04APW-EL
IC211	8-759-049-55	s	IC SN74HC00APW (E20)
IC212	8-759-252-59	s	IC MAX202CSE
IC214	8-759-082-57	s	IC TC7W04FU
IC301	8-759-545-80	s	IC LC3564BM-70-TLM
IC303	8-759-175-56	s	IC CXD8804Q
IC304	8-759-082-55	s	IC TC7W00FU
IC305	8-759-050-39	s	IC SN74HC574APW-EL
IC307	8-759-277-63	s	IC TC7W14FU (TE12R)
IC401	8-759-545-80	s	IC LC3564BM-70-TLM
IC402	8-759-175-56	s	IC CXD8804Q
IC451	8-759-391-30	s	IC 74LVX3245QSCX
IC452	8-759-391-30	s	IC 74LVX3245QSCX
IC453	8-759-391-30	s	IC 74LVX3245QSCX
IC454	8-759-391-30	s	IC 74LVX3245QSCX
IC455	8-759-391-30	s	IC 74LVX3245QSCX

http://getMANUAL.com

(SY-260 BOARD)

Ref. No. or Q'ty	Part No.	SP	Description
IC456	8-759-271-86	s	IC TC7SH04FU
IC457	8-759-082-57	s	IC TC7W04FU
IC458	8-759-082-57	s	IC TC7W04FU
IC459	8-759-049-76	s	IC SN74HC244APW (E05)
IC460	8-759-049-76	s	IC SN74HC244APW (E05)
IC461	8-759-049-76	s	IC SN74HC244APW (E05)
IS115	1-251-350-11	o	SOCKET, IC (PLCC) 32P
Q201	8-729-924-62	s	TRANSISTOR DTC113ZU
Q202	8-729-924-62	s	TRANSISTOR DTC113ZU
Q203	8-729-924-62	s	TRANSISTOR DTC113ZU
Q204	8-729-924-62	s	TRANSISTOR DTC113ZU
R102	1-218-716-11	s	RESISTOR,CHIP 10K 1/16W(1608)
R103	1-218-716-11	s	RESISTOR,CHIP 10K 1/16W(1608)
R104	1-218-716-11	s	RESISTOR,CHIP 10K 1/16W(1608)
R105	1-216-864-11	s	RESISTOR,CHIP 0 1/16W (1608)
R106	1-218-668-11	s	RESISTOR,CHIP 100 1/16W (1608)
R107	1-216-864-11	s	RESISTOR,CHIP 0 1/16W (1608)
R108	1-216-864-11	s	RESISTOR,CHIP 0 1/16W (1608)
R109	1-218-668-11	s	RESISTOR,CHIP 100 1/16W (1608)
R110	1-218-668-11	s	RESISTOR,CHIP 100 1/16W (1608)
R111	1-218-708-11	s	RESISTOR,CHIP 4.7K 1/16W(1608)
R112	1-218-708-11	s	RESISTOR,CHIP 4.7K 1/16W(1608)
R113	1-218-668-11	s	RESISTOR,CHIP 100 1/16W (1608)
R114	1-218-668-11	s	RESISTOR,CHIP 100 1/16W (1608)
R115	1-218-716-11	s	RESISTOR,CHIP 10K 1/16W(1608)
R116	1-218-708-11	s	RESISTOR,CHIP 4.7K 1/16W(1608)
R117	1-218-708-11	s	RESISTOR,CHIP 4.7K 1/16W(1608)
R118	1-218-708-11	s	RESISTOR,CHIP 4.7K 1/16W(1608)
R119	1-218-708-11	s	RESISTOR,CHIP 4.7K 1/16W(1608)
R120	1-218-708-11	s	RESISTOR,CHIP 4.7K 1/16W(1608)
R121	1-218-716-11	s	RESISTOR,CHIP 10K 1/16W(1608)
R122	1-216-864-11	s	RESISTOR,CHIP 0 1/16W (1608)
R124	1-216-864-11	s	RESISTOR,CHIP 0 1/16W (1608)
R125	1-216-864-11	s	RESISTOR,CHIP 0 1/16W (1608)
R126	1-218-660-91	s	RESISTOR CHIP 47 1/16W (1608)
R127	1-218-660-91	s	RESISTOR CHIP 47 1/16W (1608)
R128	1-216-864-11	s	RESISTOR,CHIP 0 1/16W (1608)
R130	1-216-864-11	s	RESISTOR,CHIP 0 1/16W (1608)
R131	1-216-864-11	s	RESISTOR,CHIP 0 1/16W (1608)
R132	1-216-864-11	s	RESISTOR,CHIP 0 1/16W (1608)
R133	1-216-864-11	s	RESISTOR,CHIP 0 1/16W (1608)
R134	1-216-864-11	s	RESISTOR,CHIP 0 1/16W (1608)
R137	1-216-864-11	s	RESISTOR,CHIP 0 1/16W (1608)
R138	1-216-864-11	s	RESISTOR,CHIP 0 1/16W (1608)
R139	1-218-668-11	s	RESISTOR,CHIP 100 1/16W (1608)
R140	1-218-668-11	s	RESISTOR,CHIP 100 1/16W (1608)
R141	1-218-668-11	s	RESISTOR,CHIP 100 1/16W (1608)
R142	1-218-668-11	s	RESISTOR,CHIP 100 1/16W (1608)
R143	1-218-668-11	s	RESISTOR,CHIP 100 1/16W (1608)
R144	1-218-732-11	s	RESISTOR,CHIP 47K 1/16W(1608)
R145	1-218-732-11	s	RESISTOR,CHIP 47K 1/16W(1608)
R146	1-218-732-11	s	RESISTOR,CHIP 47K 1/16W(1608)
R201	1-216-864-11	s	RESISTOR,CHIP 0 1/16W (1608)
R202	1-218-700-11	s	RESISTOR,CHIP 2.2K 1/16W(1608)
R203	1-218-700-11	s	RESISTOR,CHIP 2.2K 1/16W(1608)
R204	1-218-708-11	s	RESISTOR,CHIP 4.7K 1/16W(1608)
R205	1-218-708-11	s	RESISTOR,CHIP 4.7K 1/16W(1608)

(SY-260 BOARD)

Ref. No. or Q'ty	Part No.	SP	Description
R206	1-218-680-11	s	RESISTOR,CHIP 330 1/16W(1608)
R207	1-216-857-11	s	RESISTOR,CHIP 1.0M 1/16W 1608
R208	1-216-864-11	s	RESISTOR,CHIP 0 1/16W (1608)
R210	1-216-864-11	s	RESISTOR,CHIP 0 1/16W (1608)
R211	1-218-668-11	s	RESISTOR,CHIP 100 1/16W (1608)
R212	1-218-716-11	s	RESISTOR,CHIP 10K 1/16W(1608)
R213	1-218-716-11	s	RESISTOR,CHIP 10K 1/16W(1608)
R215	1-218-716-11	s	RESISTOR,CHIP 10K 1/16W(1608)
R216	1-218-716-11	s	RESISTOR,CHIP 10K 1/16W(1608)
R217	1-218-716-11	s	RESISTOR,CHIP 10K 1/16W(1608)
R218	1-216-864-11	s	RESISTOR,CHIP 0 1/16W (1608)
R219	1-216-864-11	s	RESISTOR,CHIP 0 1/16W (1608)
R220	1-216-864-11	s	RESISTOR,CHIP 0 1/16W (1608)
R221	1-216-864-11	s	RESISTOR,CHIP 0 1/16W (1608)
R222	1-216-864-11	s	RESISTOR,CHIP 0 1/16W (1608)
R223	1-218-716-11	s	RESISTOR,CHIP 10K 1/16W(1608)
R224	1-216-864-11	s	RESISTOR,CHIP 0 1/16W (1608)
R225	1-216-864-11	s	RESISTOR,CHIP 0 1/16W (1608)
R228	1-218-732-11	s	RESISTOR,CHIP 47K 1/16W(1608)
R229	1-218-716-11	s	RESISTOR,CHIP 10K 1/16W(1608)
R230	1-218-732-11	s	RESISTOR,CHIP 47K 1/16W(1608)
R231	1-218-716-11	s	RESISTOR,CHIP 10K 1/16W(1608)
R232	1-218-740-11	s	RESISTOR,CHIP 100K 1/16W(1608)
R233	1-216-033-00	s	RESISTOR,CHIP 220 1/10W(2012)
R234	1-218-740-11	s	RESISTOR,CHIP 100K 1/16W(1608)
R235	1-218-740-11	s	RESISTOR,CHIP 100K 1/16W(1608)
R236	1-216-033-00	s	RESISTOR,CHIP 220 1/10W(2012)
R239	1-216-033-00	s	RESISTOR,CHIP 220 1/10W(2012)
R240	1-218-692-11	s	RESISTOR,CHIP 1.0K 1/16W(1608)
R241	1-218-732-11	s	RESISTOR,CHIP 47K 1/16W(1608)
R242	1-216-033-00	s	RESISTOR,CHIP 220 1/10W(2012)
R243	1-218-732-11	s	RESISTOR,CHIP 47K 1/16W(1608)
R244	1-218-732-11	s	RESISTOR,CHIP 47K 1/16W(1608)
R245	1-218-716-11	s	RESISTOR,CHIP 10K 1/16W(1608)
R246	1-218-668-11	s	RESISTOR,CHIP 100 1/16W (1608)
R247	1-218-668-11	s	RESISTOR,CHIP 100 1/16W (1608)
R248	1-218-716-11	s	RESISTOR,CHIP 10K 1/16W(1608)
R249	1-218-716-11	s	RESISTOR,CHIP 10K 1/16W(1608)
R250	1-218-740-11	s	RESISTOR,CHIP 100K 1/16W(1608)
R251	1-218-692-11	s	RESISTOR,CHIP 1.0K 1/16W(1608)
R252	1-218-668-11	s	RESISTOR,CHIP 100 1/16W (1608)
R253	1-218-716-11	s	RESISTOR,CHIP 10K 1/16W(1608)
R254	1-218-716-11	s	RESISTOR,CHIP 10K 1/16W(1608)
R255	1-218-716-11	s	RESISTOR,CHIP 10K 1/16W(1608)
R256	1-218-668-11	s	RESISTOR,CHIP 100 1/16W (1608)
R257	1-218-716-11	s	RESISTOR,CHIP 10K 1/16W(1608)
R258	1-218-716-11	s	RESISTOR,CHIP 10K 1/16W(1608)
R259	1-218-716-11	s	RESISTOR,CHIP 10K 1/16W(1608)
R260	1-218-716-11	s	RESISTOR,CHIP 10K 1/16W(1608)
R261	1-218-716-11	s	RESISTOR,CHIP 10K 1/16W(1608)
R262	1-218-716-11	s	RESISTOR,CHIP 10K 1/16W(1608)
R263	1-218-668-11	s	RESISTOR,CHIP 100 1/16W (1608)
R264	1-218-668-11	s	RESISTOR,CHIP 100 1/16W (1608)
R301	1-216-864-11	s	RESISTOR,CHIP 0 1/16W (1608)
R302	1-216-864-11	s	RESISTOR,CHIP 0 1/16W (1608)
R303	1-218-668-11	s	RESISTOR,CHIP 100 1/16W (1608)
R304	1-216-864-11	s	RESISTOR,CHIP 0 1/16W (1608)
R305	1-218-716-11	s	RESISTOR,CHIP 10K 1/16W(1608)
R306	1-218-732-11	s	RESISTOR,CHIP 47K 1/16W(1608)

(SY-260 BOARD)

Ref. No. or Q'ty	Part No.	SP	Description
R307	1-218-732-11	s	RESISTOR,CHIP 47K 1/16W(1608)
R308	1-218-732-11	s	RESISTOR,CHIP 47K 1/16W(1608)
R309	1-218-732-11	s	RESISTOR,CHIP 47K 1/16W(1608)
R310	1-218-716-11	s	RESISTOR,CHIP 10K 1/16W(1608)
R311	1-216-864-11	s	RESISTOR,CHIP 0 1/16W (1608)
R312	1-218-740-11	s	RESISTOR,CHIP 100K 1/16W(1608)
R313	1-218-668-11	s	RESISTOR,CHIP 100 1/16W (1608)
R401	1-218-668-11	s	RESISTOR,CHIP 100 1/16W (1608)
R402	1-218-716-11	s	RESISTOR,CHIP 10K 1/16W(1608)
R403	1-218-740-11	s	RESISTOR,CHIP 100K 1/16W(1608)
R404	1-218-740-11	s	RESISTOR,CHIP 100K 1/16W(1608)
R405	1-218-740-11	s	RESISTOR,CHIP 100K 1/16W(1608)
R406	1-218-740-11	s	RESISTOR,CHIP 100K 1/16W(1608)
R407	1-218-668-11	s	RESISTOR,CHIP 100 1/16W (1608)
R409	1-218-716-11	s	RESISTOR,CHIP 10K 1/16W(1608)
R411	1-218-668-11	s	RESISTOR,CHIP 100 1/16W (1608)
R412	1-218-668-11	s	RESISTOR,CHIP 100 1/16W (1608)
R413	1-218-668-11	s	RESISTOR,CHIP 100 1/16W (1608)
R414	1-218-668-11	s	RESISTOR,CHIP 100 1/16W (1608)
R415	1-218-716-11	s	RESISTOR,CHIP 10K 1/16W(1608)
R416	1-218-716-11	s	RESISTOR,CHIP 10K 1/16W(1608)
R417	1-218-668-11	s	RESISTOR,CHIP 100 1/16W (1608)
R418	1-218-668-11	s	RESISTOR,CHIP 100 1/16W (1608)
R419	1-218-660-91	s	RESISTOR CHIP 47 1/16W (1608)
R420	1-218-668-11	s	RESISTOR,CHIP 100 1/16W (1608)
R421	1-218-740-11	s	RESISTOR,CHIP 100K 1/16W(1608)
R422	1 218 740 11	s	RESISTOR,CHIP 100K 1/16W(1608)
R423	1-218-668-11	s	RESISTOR,CHIP 100 1/16W (1608)
R424	1-218-740-11	s	RESISTOR,CHIP 100K 1/16W(1608)
R425	1-216-864-11	s	RESISTOR,CHIP 0 1/16W (1608)
R426	1-218-668-11	s	RESISTOR,CHIP 100 1/16W (1608)
R427	1-218-740-11	s	RESISTOR,CHIP 100K 1/16W(1608)
R428	1-218-740-11	s	RESISTOR,CHIP 100K 1/16W(1608)
R429	1-218-740-11	s	RESISTOR,CHIP 100K 1/16W(1608)
R430	1-218-740-11	s	RESISTOR,CHIP 100K 1/16W(1608)
R450	1-216-864-11	s	RESISTOR,CHIP 0 1/16W (1608)
R451	1-216-864-11	s	RESISTOR,CHIP 0 1/16W (1608)
R452	1-216-864-11	s	RESISTOR,CHIP 0 1/16W (1608)
R453	1-218-716-11	s	RESISTOR,CHIP 10K 1/16W(1608)
R455	1-216-864-11	s	RESISTOR,CHIP 0 1/16W (1608)
R456	1-216-864-11	s	RESISTOR,CHIP 0 1/16W (1608)
R457	1-218-668-11	s	RESISTOR,CHIP 100 1/16W (1608)
R458	1-218-668-11	s	RESISTOR,CHIP 100 1/16W (1608)
R459	1-218-660-91	s	RESISTOR CHIP 47 1/16W (1608)
R460	1-218-668-11	s	RESISTOR,CHIP 100 1/16W (1608)
R461	1-218-668-11	s	RESISTOR,CHIP 100 1/16W (1608)
R462	1-218-668-11	s	RESISTOR,CHIP 100 1/16W (1608)
R463	1-218-668-11	s	RESISTOR,CHIP 100 1/16W (1608)
R464	1-218-660-91	s	RESISTOR CHIP 47 1/16W (1608)
R465	1-218-652-11	s	RESISTOR,CHIP 22 1/16W (1608)
R466	1-218-652-11	s	RESISTOR,CHIP 22 1/16W (1608)
R467	1-218-652-11	s	RESISTOR,CHIP 22 1/16W (1608)
R468	1-218-652-11	s	RESISTOR,CHIP 22 1/16W (1608)
R469	1-218-652-11	s	RESISTOR,CHIP 22 1/16W (1608)
R470	1-218-652-11	s	RESISTOR,CHIP 22 1/16W (1608)
R471	1-218-652-11	s	RESISTOR,CHIP 22 1/16W (1608)
R472	1-218-652-11	s	RESISTOR,CHIP 22 1/16W (1608)
R473	1-216-864-11	s	RESISTOR,CHIP 0 1/16W (1608)
R474	1-218-660-91	s	RESISTOR CHIP 47 1/16W (1608)

(SY-260 BOARD)

Ref. No. or Q'ty	Part No.	SP	Description
R475	1-218-660-91	s	RESISTOR CHIP 47 1/16W (1608)
R476	1-218-660-91	s	RESISTOR CHIP 47 1/16W (1608)
R477	1-218-660-91	s	RESISTOR CHIP 47 1/16W (1608)
R479	1-218-668-11	s	RESISTOR,CHIP 100 1/16W (1608)
R480	1-218-668-11	s	RESISTOR,CHIP 100 1/16W (1608)
R481	1-218-668-11	s	RESISTOR,CHIP 100 1/16W (1608)
R482	1-216-864-11	s	RESISTOR,CHIP 0 1/16W (1608)
R483	1-218-668-11	s	RESISTOR,CHIP 100 1/16W (1608)
R484	1-218-668-11	s	RESISTOR,CHIP 100 1/16W (1608)
R485	1-218-668-11	s	RESISTOR,CHIP 100 1/16W (1608)
R486	1-218-668-11	s	RESISTOR,CHIP 100 1/16W (1608)
R487	1-218-668-11	s	RESISTOR,CHIP 100 1/16W (1608)
R488	1-218-668-11	s	RESISTOR,CHIP 100 1/16W (1608)
R489	1-218-668-11	s	RESISTOR,CHIP 100 1/16W (1608)
R490	1-218-668-11	s	RESISTOR,CHIP 100 1/16W (1608)
R491	1-216-864-11	s	RESISTOR,CHIP 0 1/16W (1608)
R492	1-218-668-11	s	RESISTOR,CHIP 100 1/16W (1608)
R493	1-218-668-11	s	RESISTOR,CHIP 100 1/16W (1608)
R494	1-218-660-91	s	RESISTOR CHIP 47 1/16W (1608)
R495	1-218-668-11	s	RESISTOR,CHIP 100 1/16W (1608)
R496	1-218-660-91	s	RESISTOR CHIP 47 1/16W (1608)
R497	1-218-660-91	s	RESISTOR CHIP 47 1/16W (1608)
R498	1-218-668-11	s	RESISTOR,CHIP 100 1/16W (1608)
R499	1-218-668-11	s	RESISTOR,CHIP 100 1/16W (1608)
R500	1-216-864-11	s	RESISTOR,CHIP 0 1/16W (1608)
RB101	1-236-908-11	s	RESISTOR,NETWORK 10K (3216)
RB102	1 239 430 11	s	NETWORK RESISTOR 4.7K (1608)
RB103	1-239-430-11	s	NETWORK RESISTOR 4.7K (1608)
RB104	1-239-430-11	s	NETWORK RESISTOR 4.7K (1608)
RB105	1-239-305-11	s	RESISTOR ARRAY,CHIP 4.7K
RB106	1-239-305-11	s	RESISTOR ARRAY,CHIP 4.7K
RB107	1-239-305-11	s	RESISTOR ARRAY,CHIP 4.7K
RB108	1-239-305-11	s	RESISTOR ARRAY,CHIP 4.7K
RB109	1-239-303-11	s	RESISTOR ARRAY,CHIP 1K
RB110	1-239-305-11	s	RESISTOR ARRAY,CHIP 4.7K
RB111	1-239-305-11	s	RESISTOR ARRAY,CHIP 4.7K
RB112	1-239-305-11	s	RESISTOR ARRAY,CHIP 4.7K
RB113	1-239-305-11	s	RESISTOR ARRAY,CHIP 4.7K
RB201	1-239-306-11	s	RESISTOR ARRAY,CHIP 10K
RB202	1-239-306-11	s	RESISTOR ARRAY,CHIP 10K
RB301	1-239-306-11	s	RESISTOR ARRAY,CHIP 10K
RB302	1-239-711-11	s	NETWORK, RESISTOR 0 (1608)
RB303	1-239-309-11	s	RESISTOR ARRAY,CHIP 100K
RB401	1-239-308-11	s	RESISTOR ARRAY,CHIP 47K
RB402	1-239-308-11	s	RESISTOR ARRAY,CHIP 47K
RB403	1-239-309-11	s	RESISTOR ARRAY,CHIP 100K
RB410	1-239-621-11	s	NETWORK RESISTOR 22 (1608)
RB411	1-239-621-11	s	NETWORK RESISTOR 22 (1608)
RB412	1-239-621-11	s	NETWORK RESISTOR 22 (1608)
RB450	1-239-308-11	s	RESISTOR ARRAY,CHIP 47K
RB451	1-239-308-11	s	RESISTOR ARRAY,CHIP 47K
RB452	1-239-308-11	s	RESISTOR ARRAY,CHIP 47K
RB453	1-239-308-11	s	RESISTOR ARRAY,CHIP 47K
RB454	1-239-308-11	s	RESISTOR ARRAY,CHIP 47K
S101	1-572-474-11	s	SWITCH, TACTILE
S201	1-692-271-31	s	SWITCH, SLIDE
X101	1-760-528-11	s	OSCILLATOR, CRYSTAL
X201	1-579-993-21	s	VIBRATOR, CERAMIC

(SY-260 BOARD)

Ref. No. or Q'ty	Part No.	SP	Description
X202	1-767-716-11	s	OSCILLATOR, CRYSTAL

TG-191 BOARD

Ref. No. or Q'ty	Part No.	SP	Description
1pc	A-8320-125-B	o	MOUNTED CIRCUIT BOARD, TG-191
2pcs	3-603-737-01	o	LEVER,BOARD
5pcs	3-729-061-01	s	SCREW (M2X4.5) (TYPE 1)(STEEL)
C100	1-126-392-11	s	CAPACITOR,CHIP ELECT100MF/6.3V
C101	1-107-826-11	s	CAPACITOR,CHIP CERAMIC 0.1MF
C102	1-126-394-11	s	CAPACITOR ELECT 10MF/16V(CHIP)
C103	1-107-826-11	s	CAPACITOR,CHIP CERAMIC 0.1MF
C104	1-107-826-11	s	CAPACITOR,CHIP CERAMIC 0.1MF
C105	1-107-826-11	s	CAPACITOR,CHIP CERAMIC 0.1MF
C106	1-107-826-11	s	CAPACITOR,CHIP CERAMIC 0.1MF
C107	1-107-826-11	s	CAPACITOR,CHIP CERAMIC 0.1MF
C108	1-107-826-11	s	CAPACITOR,CHIP CERAMIC 0.1MF
C109	1-126-392-11	s	CAPACITOR,CHIP ELECT100MF/6.3V
C110	1-126-392-11	s	CAPACITOR,CHIP ELECT100MF/6.3V
C111	1-107-826-11	s	CAPACITOR,CHIP CERAMIC 0.1MF
C112	1-107-826-11	s	CAPACITOR,CHIP CERAMIC 0.1MF
C113	1-126-392-11	s	CAPACITOR,CHIP ELECT100MF/6.3V
C114	1-107-826-11	s	CAPACITOR,CHIP CERAMIC 0.1MF
C115	1-162-927-11	s	CAPACITOR,CERAMIC 100PF/50V CH
C116	1-162-921-11	s	CAPACITOR,CERAMIC 33PF/50V CH
C117	1-164-230-11	s	CAPACITOR,CERAMIC 220PF/50V
C118	1-107-826-11	s	CAPACITOR,CHIP CERAMIC 0.1MF
C119	1-107-826-11	s	CAPACITOR,CHIP CERAMIC 0.1MF
C120	1-127-969-21	s	CAPACITOR,FILM 0.0047MF/50V
C121	1-162-970-11	s	CAPACITOR CERAMIC 0.01MF/25V B
C122	1-107-826-11	s	CAPACITOR,CHIP CERAMIC 0.1MF
C123	1 107 826 11	s	CAPACITOR,CHIP CERAMIC 0.1MF
C124	1-162-927-11	s	CAPACITOR,CERAMIC 100PF/50V CH
C126	1-164-315-11	s	CAPACITOR,CERAMIC 470PF/50V CH
C127	1-164-230-11	s	CAPACITOR,CERAMIC 220PF/50V
C128	1-127-969-21	s	CAPACITOR,FILM 0.0047MF/50V
C129	1-115-156-11	s	CAPACITOR,1MF/10V (1608)
C130	1-107-826-11	s	CAPACITOR,CHIP CERAMIC 0.1MF
C131	1-164-230-11	s	CAPACITOR,CERAMIC 220PF/50V
C132	1-107-826-11	s	CAPACITOR,CHIP CERAMIC 0.1MF
C133	1-164-315-11	s	CAPACITOR,CERAMIC 470PF/50V CH
C134	1-164-227-11	s	CAPACITOR,CERAMIC 0.022MF/25V
C135	1-107-686-11	s	CAPACITOR,CHIP ELECT 4.7MF/16V
C136	1-107-686-11	s	CAPACITOR,CHIP ELECT 4.7MF/16V
C137	1-107-826-11	s	CAPACITOR,CHIP CERAMIC 0.1MF
C138	1-107-826-11	s	CAPACITOR,CHIP CERAMIC 0.1MF
C139	1-127-975-21	s	CAPACITOR,FILM 0.047MF/50V
C140	1-107-826-11	s	CAPACITOR,CHIP CERAMIC 0.1MF
C141	1-107-826-11	s	CAPACITOR,CHIP CERAMIC 0.1MF
C142	1-107-826-11	s	CAPACITOR,CHIP CERAMIC 0.1MF
C143	1-107-826-11	s	CAPACITOR,CHIP CERAMIC 0.1MF
C144	1-126-394-11	s	CAPACITOR ELECT 10MF/16V(CHIP)
C145	1-107-826-11	s	CAPACITOR,CHIP CERAMIC 0.1MF
C146	1-162-963-11	s	CAPACITOR,CERAMIC 680PF/50V(B)
C147	1-107-826-11	s	CAPACITOR,CHIP CERAMIC 0.1MF
C148	1-162-963-11	s	CAPACITOR,CERAMIC 680PF/50V(B)
C149	1-164-315-11	s	CAPACITOR,CERAMIC 470PF/50V CH
C150	1-126-392-11	s	CAPACITOR,CHIP ELECT100MF/6.3V
C151	1-107-826-11	s	CAPACITOR,CHIP CERAMIC 0.1MF
C152	1-107-826-11	s	CAPACITOR,CHIP CERAMIC 0.1MF
C153	1-162-911-11	s	CAPACITOR,CERAMIC 6PF/50V 1608
C154	1-162-907-11	s	CAPACITOR,CERAMIC 2PF/50V(CK)
C155	1-107-826-11	s	CAPACITOR,CHIP CERAMIC 0.1MF

(TG-191 BOARD)

Ref. No. or Q'ty	Part No.	SP	Description
C156	1-162-921-11	s	CAPACITOR,CERAMIC 33PF/50V CH
C157	1-107-826-11	s	CAPACITOR,CHIP CERAMIC 0.1MF
C158	1-162-921-11	s	CAPACITOR,CERAMIC 33PF/50V CH
C159	1-126-392-11	s	CAPACITOR,CHIP ELECT100MF/6.3V
C160	1-107-826-11	s	CAPACITOR,CHIP CERAMIC 0.1MF
C161	1-107-826-11	s	CAPACITOR,CHIP CERAMIC 0.1MF
C162	1-107-826-11	s	CAPACITOR,CHIP CERAMIC 0.1MF
C163	1-107-826-11	s	CAPACITOR,CHIP CERAMIC 0.1MF
C164	1-127-977-21	s	CAPACITOR,FILM 0.1MF/50V
C165	1-107-826-11	s	CAPACITOR,CHIP CERAMIC 0.1MF
C166	1-127-977-21	s	CAPACITOR,FILM 0.1MF/50V
C167	1-107-826-11	s	CAPACITOR,CHIP CERAMIC 0.1MF
C168	1-126-392-11	s	CAPACITOR,CHIP ELECT100MF/6.3V
C169	1-126-392-11	s	CAPACITOR,CHIP ELECT100MF/6.3V
C170	1-107-826-11	s	CAPACITOR,CHIP CERAMIC 0.1MF
C171	1-107-826-11	s	CAPACITOR,CHIP CERAMIC 0.1MF
C172	1-107-826-11	s	CAPACITOR,CHIP CERAMIC 0.1MF
C173	1-107-826-11	s	CAPACITOR,CHIP CERAMIC 0.1MF
C174	1-107-826-11	s	CAPACITOR,CHIP CERAMIC 0.1MF
C175	1-107-826-11	s	CAPACITOR,CHIP CERAMIC 0.1MF
C176	1-107-826-11	s	CAPACITOR,CHIP CERAMIC 0.1MF
C177	1-126-392-11	s	CAPACITOR,CHIP ELECT100MF/6.3V
C178	1-107-826-11	s	CAPACITOR,CHIP CERAMIC 0.1MF
C179	1-107-826-11	s	CAPACITOR,CHIP CERAMIC 0.1MF
C180	1-107-826-11	s	CAPACITOR,CHIP CERAMIC 0.1MF
C181	1-162-919-11	s	CAPACITOR,CERAMIC 22PF/50V CH
C182	1 107 826 11	s	CAPACITOR,CHIP CERAMIC 0.1MF
C183	1-162-919-11	s	CAPACITOR,CERAMIC 22PF/50V CH
C184	1-107-826-11	s	CAPACITOR,CHIP CERAMIC 0.1MF
C185	1-107-826-11	s	CAPACITOR,CHIP CERAMIC 0.1MF
C186	1-107-826-11	s	CAPACITOR,CHIP CERAMIC 0.1MF
C187	1-107-826-11	s	CAPACITOR,CHIP CERAMIC 0.1MF
C188	1-107-826-11	s	CAPACITOR,CHIP CERAMIC 0.1MF
C189	1-107-826-11	s	CAPACITOR,CHIP CERAMIC 0.1MF
C190	1-107-826-11	s	CAPACITOR,CHIP CERAMIC 0.1MF
C191	1-107-826-11	s	CAPACITOR,CHIP CERAMIC 0.1MF
C192	1-126-392-11	s	CAPACITOR,CHIP ELECT100MF/6.3V
C193	1-107-826-11	s	CAPACITOR,CHIP CERAMIC 0.1MF
C194	1-107-826-11	s	CAPACITOR,CHIP CERAMIC 0.1MF
C195	1-107-826-11	s	CAPACITOR,CHIP CERAMIC 0.1MF
C196	1-107-826-11	s	CAPACITOR,CHIP CERAMIC 0.1MF
C197	1-107-826-11	s	CAPACITOR,CHIP CERAMIC 0.1MF
C198	1-126-392-11	s	CAPACITOR,CHIP ELECT100MF/6.3V
C199	1-107-826-11	s	CAPACITOR,CHIP CERAMIC 0.1MF
C200	1-107-826-11	s	CAPACITOR,CHIP CERAMIC 0.1MF
C201	1-126-392-11	s	CAPACITOR,CHIP ELECT100MF/6.3V
C202	1-107-826-11	s	CAPACITOR,CHIP CERAMIC 0.1MF
C203	1-107-826-11	s	CAPACITOR,CHIP CERAMIC 0.1MF
C204	1-107-826-11	s	CAPACITOR,CHIP CERAMIC 0.1MF
C205	1-107-826-11	s	CAPACITOR,CHIP CERAMIC 0.1MF
C206	1-126-392-11	s	CAPACITOR,CHIP ELECT100MF/6.3V
C207	1-107-826-11	s	CAPACITOR,CHIP CERAMIC 0.1MF
C208	1-107-826-11	s	CAPACITOR,CHIP CERAMIC 0.1MF
C209	1-107-826-11	s	CAPACITOR,CHIP CERAMIC 0.1MF
C210	1-126-392-11	s	CAPACITOR,CHIP ELECT100MF/6.3V
C211	1-126-392-11	s	CAPACITOR,CHIP ELECT100MF/6.3V
C212	1-107-826-11	s	CAPACITOR,CHIP CERAMIC 0.1MF
C213	1-107-826-11	s	CAPACITOR,CHIP CERAMIC 0.1MF
C214	1-113-500-11	s	CAPACITOR TANTALUM 100MF/10V

(TG-191 BOARD)

Ref. No. or Q'ty	Part No.	SP	Description
C215	1-107-826-11	s	CAPACITOR,CHIP CERAMIC 0.1MF
C216	1-107-826-11	s	CAPACITOR,CHIP CERAMIC 0.1MF
C217	1-162-925-11	s	CAPACITOR,CERAMIC 68PF/50V CH
C218	1-164-230-11	s	CAPACITOR,CERAMIC 220PF/50V
C219	1-162-925-11	s	CAPACITOR,CERAMIC 68PF/50V CH
C220	1-107-826-11	s	CAPACITOR,CHIP CERAMIC 0.1MF
C221	1-107-826-11	s	CAPACITOR,CHIP CERAMIC 0.1MF
C222	1-107-826-11	s	CAPACITOR,CHIP CERAMIC 0.1MF
C223	1-107-826-11	s	CAPACITOR,CHIP CERAMIC 0.1MF
C224	1-107-826-11	s	CAPACITOR,CHIP CERAMIC 0.1MF
C225	1-107-826-11	s	CAPACITOR,CHIP CERAMIC 0.1MF
C227	1-135-179-21	s	CAPACITOR,TANTALUM 2.2MF/16V
C228	1-107-826-11	s	CAPACITOR,CHIP CERAMIC 0.1MF
C229	1-107-826-11	s	CAPACITOR,CHIP CERAMIC 0.1MF
C230	1-162-964-11	s	CAPACITOR,CERAMIC 1000PF/50V B
C231	1-107-826-11	s	CAPACITOR,CHIP CERAMIC 0.1MF
C232	1-107-826-11	s	CAPACITOR,CHIP CERAMIC 0.1MF
C233	1-107-826-11	s	CAPACITOR,CHIP CERAMIC 0.1MF
C234	1-107-826-11	s	CAPACITOR,CHIP CERAMIC 0.1MF
C235	1-113-500-11	s	CAPACITOR TANTALUM 100MF/10V
C236	1-107-826-11	s	CAPACITOR,CHIP CERAMIC 0.1MF
C237	1-107-826-11	s	CAPACITOR,CHIP CERAMIC 0.1MF
C238	1-162-925-11	s	CAPACITOR,CERAMIC 68PF/50V CH
C239	1-164-230-11	s	CAPACITOR,CERAMIC 220PF/50V
C240	1-162-925-11	s	CAPACITOR,CERAMIC 68PF/50V CH
C241	1-126-392-11	s	CAPACITOR,CHIP ELECT100MF/6.3V
C242	1 107 826 11	s	CAPACITOR,CHIP CERAMIC 0.1MF
C243	1-107-826-11	s	CAPACITOR,CHIP CERAMIC 0.1MF
C244	1-107-826-11	s	CAPACITOR,CHIP CERAMIC 0.1MF
C245	1-107-826-11	s	CAPACITOR,CHIP CERAMIC 0.1MF
C246	1-107-826-11	s	CAPACITOR,CHIP CERAMIC 0.1MF
C247	1-107-826-11	s	CAPACITOR,CHIP CERAMIC 0.1MF
C248	1-107-826-11	s	CAPACITOR,CHIP CERAMIC 0.1MF
C249	1-107-826-11	s	CAPACITOR,CHIP CERAMIC 0.1MF
C250	1-107-826-11	s	CAPACITOR,CHIP CERAMIC 0.1MF
C251	1-107-826-11	s	CAPACITOR,CHIP CERAMIC 0.1MF
C252	1-107-826-11	s	CAPACITOR,CHIP CERAMIC 0.1MF
C253	1-107-826-11	s	CAPACITOR,CHIP CERAMIC 0.1MF
C254	1-107-826-11	s	CAPACITOR,CHIP CERAMIC 0.1MF
C255	1-107-826-11	s	CAPACITOR,CHIP CERAMIC 0.1MF
C256	1-162-963-11	s	CAPACITOR,CERAMIC 680PF/50V(B)
C257	1-162-927-11	s	CAPACITOR,CERAMIC 100PF/50V CH
C258	1-107-826-11	s	CAPACITOR,CHIP CERAMIC 0.1MF
C259	1-162-927-11	s	CAPACITOR,CERAMIC 100PF/50V CH
C260	1-107-826-11	s	CAPACITOR,CHIP CERAMIC 0.1MF
C261	1-107-826-11	s	CAPACITOR,CHIP CERAMIC 0.1MF
C262	1-113-500-11	s	CAPACITOR TANTALUM 100MF/10V
C263	1-113-500-11	s	CAPACITOR TANTALUM 100MF/10V
C264	1-113-500-11	s	CAPACITOR TANTALUM 100MF/10V
C265	1-113-500-11	s	CAPACITOR TANTALUM 100MF/10V
C266	1-104-852-11	s	CAPACITOR,TANTALUM 22MF/10V
C267	1-104-852-11	s	CAPACITOR,TANTALUM 22MF/10V
C268	1-107-826-11	s	CAPACITOR,CHIP CERAMIC 0.1MF
C269	1-107-826-11	s	CAPACITOR,CHIP CERAMIC 0.1MF
C270	1-107-826-11	s	CAPACITOR,CHIP CERAMIC 0.1MF
C271	1-107-826-11	s	CAPACITOR,CHIP CERAMIC 0.1MF
C272	1-107-826-11	s	CAPACITOR,CHIP CERAMIC 0.1MF
C273	1-107-826-11	s	CAPACITOR,CHIP CERAMIC 0.1MF
C274	1-104-914-11	s	CAPACITOR CHIP TANTAL 22MF/16V

(TG-191 BOARD)

Ref. No. or Q'ty	Part No.	SP	Description
C275	1-115-156-11	s	CAPACITOR,1MF/10V (1608)
C276	1-107-826-11	s	CAPACITOR,CHIP CERAMIC 0.1MF
C277	1-126-392-11	s	CAPACITOR,CHIP ELECT100MF/6.3V
C278	1-107-826-11	s	CAPACITOR,CHIP CERAMIC 0.1MF
C279	1-107-826-11	s	CAPACITOR,CHIP CERAMIC 0.1MF
C280	1-107-826-11	s	CAPACITOR,CHIP CERAMIC 0.1MF
C281	1-107-826-11	s	CAPACITOR,CHIP CERAMIC 0.1MF
C282	1-107-826-11	s	CAPACITOR,CHIP CERAMIC 0.1MF
C283	1-126-392-11	s	CAPACITOR,CHIP ELECT100MF/6.3V
C284	1-126-392-11	s	CAPACITOR,CHIP ELECT100MF/6.3V
C285	1-107-826-11	s	CAPACITOR,CHIP CERAMIC 0.1MF
C286	1-107-826-11	s	CAPACITOR,CHIP CERAMIC 0.1MF
C287	1-107-826-11	s	CAPACITOR,CHIP CERAMIC 0.1MF
C288	1-115-156-11	s	CAPACITOR,1MF/10V (1608)
C289	1-162-927-11	s	CAPACITOR,CERAMIC 100PF/50V CH
C290	1-107-826-11	s	CAPACITOR,CHIP CERAMIC 0.1MF
C291	1-107-826-11	s	CAPACITOR,CHIP CERAMIC 0.1MF
C292	1-107-826-11	s	CAPACITOR,CHIP CERAMIC 0.1MF
C300	1-107-826-11	s	CAPACITOR,CHIP CERAMIC 0.1MF
C301	1-107-826-11	s	CAPACITOR,CHIP CERAMIC 0.1MF
C302	1-107-826-11	s	CAPACITOR,CHIP CERAMIC 0.1MF
C305	1-107-826-11	s	CAPACITOR,CHIP CERAMIC 0.1MF
C306	1-107-826-11	s	CAPACITOR,CHIP CERAMIC 0.1MF
C307	1-107-826-11	s	CAPACITOR,CHIP CERAMIC 0.1MF
C308	1-107-826-11	s	CAPACITOR,CHIP CERAMIC 0.1MF
C309	1-162-919-11	s	CAPACITOR,CERAMIC 22PF/50V CH
C310	1 162 919 11	s	CAPACITOR,CERAMIC 22PF/50V CH
C311	1-162-919-11	s	CAPACITOR,CERAMIC 22PF/50V CH
C312	1-162-919-11	s	CAPACITOR,CERAMIC 22PF/50V CH
C313	1-162-970-11	s	CAPACITOR CERAMIC 0.01MF/25V B
C314	1-162-970-11	s	CAPACITOR CERAMIC 0.01MF/25V B
C315	1-162-970-11	s	CAPACITOR CERAMIC 0.01MF/25V B
C316	1-162-970-11	s	CAPACITOR CERAMIC 0.01MF/25V B
C317	1-162-919-11	s	CAPACITOR,CERAMIC 22PF/50V CH
C318	1-162-919-11	s	CAPACITOR,CERAMIC 22PF/50V CH
C319	1-162-919-11	s	CAPACITOR,CERAMIC 22PF/50V CH
C320	1-162-919-11	s	CAPACITOR,CERAMIC 22PF/50V CH
C321	1-107-826-11	s	CAPACITOR,CHIP CERAMIC 0.1MF
C322	1-162-919-11	s	CAPACITOR,CERAMIC 22PF/50V CH
C323	1-162-919-11	s	CAPACITOR,CERAMIC 22PF/50V CH
C324	1-162-919-11	s	CAPACITOR,CERAMIC 22PF/50V CH
C325	1-162-919-11	s	CAPACITOR,CERAMIC 22PF/50V CH
C326	1-107-826-11	s	CAPACITOR,CHIP CERAMIC 0.1MF
C327	1-107-826-11	s	CAPACITOR,CHIP CERAMIC 0.1MF
C328	1-107-826-11	s	CAPACITOR,CHIP CERAMIC 0.1MF
C329	1-162-919-11	s	CAPACITOR,CERAMIC 22PF/50V CH
C330	1-162-970-11	s	CAPACITOR CERAMIC 0.01MF/25V B
C332	1-162-919-11	s	CAPACITOR,CERAMIC 22PF/50V CH
C333	1-162-919-11	s	CAPACITOR,CERAMIC 22PF/50V CH
C338	1-107-826-11	s	CAPACITOR,CHIP CERAMIC 0.1MF
C339	1-107-826-11	s	CAPACITOR,CHIP CERAMIC 0.1MF
C340	1-107-826-11	s	CAPACITOR,CHIP CERAMIC 0.1MF
C400	1-107-826-11	s	CAPACITOR,CHIP CERAMIC 0.1MF
C401	1-107-826-11	s	CAPACITOR,CHIP CERAMIC 0.1MF
C402	1-107-826-11	s	CAPACITOR,CHIP CERAMIC 0.1MF
C403	1-126-394-11	s	CAPACITOR ELECT 10MF/16V(CHIP)
C404	1-126-394-11	s	CAPACITOR ELECT 10MF/16V(CHIP)
C405	1-107-826-11	s	CAPACITOR,CHIP CERAMIC 0.1MF
C406	1-126-394-11	s	CAPACITOR ELECT 10MF/16V(CHIP)

(TG-191 BOARD)

Ref. No. or Q'ty	Part No.	SP	Description
C407	1-126-392-11	s	CAPACITOR,CHIP ELECT100MF/6.3V
C408	1-126-392-11	s	CAPACITOR,CHIP ELECT100MF/6.3V
C409	1-107-826-11	s	CAPACITOR,CHIP CERAMIC 0.1MF
C410	1-107-826-11	s	CAPACITOR,CHIP CERAMIC 0.1MF
C411	1-126-392-11	s	CAPACITOR,CHIP ELECT100MF/6.3V
C412	1-126-392-11	s	CAPACITOR,CHIP ELECT100MF/6.3V
C413	1-107-826-11	s	CAPACITOR,CHIP CERAMIC 0.1MF
C414	1-107-826-11	s	CAPACITOR,CHIP CERAMIC 0.1MF
C415	1-126-392-11	s	CAPACITOR,CHIP ELECT100MF/6.3V
C416	1-107-826-11	s	CAPACITOR,CHIP CERAMIC 0.1MF
C417	1-126-392-11	s	CAPACITOR,CHIP ELECT100MF/6.3V
C418	1-107-826-11	s	CAPACITOR,CHIP CERAMIC 0.1MF
C427	1-107-826-11	s	CAPACITOR,CHIP CERAMIC 0.1MF
C429	1-107-826-11	s	CAPACITOR,CHIP CERAMIC 0.1MF
C430	1-107-826-11	s	CAPACITOR,CHIP CERAMIC 0.1MF
C431	1-107-826-11	s	CAPACITOR,CHIP CERAMIC 0.1MF
C432	1-107-826-11	s	CAPACITOR,CHIP CERAMIC 0.1MF
C433	1-164-230-11	s	CAPACITOR,CERAMIC 220PF/50V
C434	1-107-826-11	s	CAPACITOR,CHIP CERAMIC 0.1MF
C435	1-107-826-11	s	CAPACITOR,CHIP CERAMIC 0.1MF
C436	1-107-826-11	s	CAPACITOR,CHIP CERAMIC 0.1MF
C440	1-107-826-11	s	CAPACITOR,CHIP CERAMIC 0.1MF
C441	1-107-826-11	s	CAPACITOR,CHIP CERAMIC 0.1MF
C451	1-107-826-11	s	CAPACITOR,CHIP CERAMIC 0.1MF
C454	1-107-826-11	s	CAPACITOR,CHIP CERAMIC 0.1MF
C455	1-107-826-11	s	CAPACITOR,CHIP CERAMIC 0.1MF
C456	1 107 826 11	s	CAPACITOR,CHIP CERAMIC 0.1MF
CN52	1-695-453-11	s	CONNECTOR,BOARD TO BOARD 50P
CP101	1-767-619-11	s	OSCILLATOR, CRYSTAL
CP103	1-767-617-11	s	OSCILLATOR, CRYSTAL
CP201	1-767-589-11	s	OSCILLATOR, LITHIUM TANTALATE
CP202	1-760-275-11	s	OSCILLATOR, CRYSTAL (VCO TYPE)
D102	8-719-820-41	s	DIODE 1SS302
D103	8-719-820-41	s	DIODE 1SS302
D201	8-719-820-41	s	DIODE 1SS302
D202	8-719-820-41	s	DIODE 1SS302
D204	8-719-820-41	s	DIODE 1SS302
D205	8-719-023-69	s	DIODE SB007T03Q
FB101	1-469-094-11	s	FERRITE, EMI (SMD)
FB103	1-469-094-11	s	FERRITE, EMI (SMD)
FB104	1-469-094-11	s	FERRITE, EMI (SMD)
FB202	1-469-094-11	s	FERRITE, EMI (SMD)
FB208	1-469-094-11	s	FERRITE, EMI (SMD)
FB209	1-469-094-11	s	FERRITE, EMI (SMD)
IC100	8-759-196-93	s	IC TC7SH00FU-TE85R
IC101	8-759-389-68	s	IC 74VHCT04MTCX
IC102	8-759-195-81	s	IC TC7S86FU
IC103	8-759-485-82	s	IC MC34182DR2
IC104	8-759-082-57	s	IC TC7W04FU
IC105	8-759-009-07	s	IC MC14053BF
IC106	8-759-295-09	s	IC TLC2932IPW
IC107	8-759-987-27	s	IC LM1881M
IC108	8-759-485-82	s	IC MC34182DR2
IC109	8-759-528-99	s	IC TC74VHC221AFT(EL)
IC110	8-759-262-03	s	IC MC14577CF
IC111	8-759-196-93	s	IC TC7SH00FU-TE85R

(TG-191 BOARD)

Ref. No. or Q'ty	Part No.	SP	Description
IC112	8-759-338-95	s	IC NJM2903V (TE2)
IC113	8-759-702-08	s	IC NJM360M
IC114	8-759-523-81	s	IC TC74VHC08FT(EL)
IC115	8-759-196-97	s	IC TC7SH32FU (TE85R)
IC116	8-759-239-55	s	IC TC74HC123AF
IC117	8-759-471-98	s	IC 74VHCT08MTCX
IC118	8-759-196-97	s	IC TC7SH32FU (TE85R)
IC119	8-759-491-50	s	IC TC74VHCT244AFT(EL)
IC120	8-759-528-99	s	IC TC74VHC221AFT(EL)
IC121	8-759-082-61	s	IC TC4W53FU
IC122	8-759-271-86	s	IC TC7SH04FU
IC123	8-759-528-99	s	IC TC74VHC221AFT(EL)
IC124	8-759-234-77	s	IC TC4S66F
IC125	8-759-338-95	s	IC NJM2903V (TE2)
IC126	8-759-702-08	s	IC NJM360M
IC127	8-759-523-83	s	IC TC74VHC11FT(EL)
IC128	8-759-175-66	s	IC CXD8817Q
IC129	8-759-485-82	s	IC MC34182DR2
IC130	8-759-907-81	s	IC SN74LS221N(S)
IC131	8-759-491-46	s	IC TC74VHCT04AFT (EL)
IC132	8-759-082-61	s	IC TC4W53FU
IC133	8-729-047-61	s	TRANSISTOR SI4925DY-T1
IC134	8-729-024-50	s	TRANSISTOR SI9936DY
IC135	8-759-196-96	s	IC TC7SH08FU (TE85R)
IC136	8-759-485-82	s	IC MC34182DR2
IC137	8-759-009-07	s	IC MC14053BF
IC138	8 759 485 82	s	IC MC34182DR2
IC139	8-759-485-82	s	IC MC34182DR2
IC141	8-759-234-77	s	IC TC4S66F
IC200	8-759-196-96	s	IC TC7SH08FU (TE85R)
IC201	8-759-196-93	s	IC TC7SH00FU-TE85R
IC202	8-752-334-64	s	IC CXD1171M
IC203	8-759-050-03	s	IC SN74HC151APW-E20
IC204	8-759-271-86	s	IC TC7SH04FU
IC205	8-759-524-18	s	IC TC74VHC163FT(EL)
IC206	8-759-389-68	s	IC 74VHCT04MTCX
IC207	8-759-295-09	s	IC TLC2932IPW
IC208	8-759-702-08	s	IC NJM360M
IC209	8-759-523-95	s	IC TC74VHC74FT(EL)
IC210	8-752-334-64	s	IC CXD1171M
IC211	8-759-523-95	s	IC TC74VHC74FT(EL)
IC212	8-759-485-82	s	IC MC34182DR2
IC213	8-759-523-95	s	IC TC74VHC74FT(EL)
IC214	8-759-702-08	s	IC NJM360M
IC215	8-759-271-86	s	IC TC7SH04FU
IC216	8-759-009-07	s	IC MC14053BF
IC217	8-759-175-65	s	IC CXD8821Q
IC218	8-759-050-03	s	IC SN74HC151APW-E20
IC219	8-759-907-81	s	IC SN74LS221N(S)
IC220	8-759-491-46	s	IC TC74VHCT04AFT (EL)
IC221	8-759-262-03	s	IC MC14577CF
IC222	8-759-485-82	s	IC MC34182DR2
IC223	8-759-338-95	s	IC NJM2903V (TE2)
IC224	8-759-523-81	s	IC TC74VHC08FT(EL)
IC225	8-759-390-07	s	IC CXD8997R
IC226	8-759-082-57	s	IC TC7W04FU
IC227	8-759-523-94	s	IC TC74VHC32FT(EL)
IC228	8-759-338-95	s	IC NJM2903V (TE2)
IC229	8-759-196-97	s	IC TC7SH32FU (TE85R)

(TG-191 BOARD)

Ref. No. or Q'ty	Part No.	SP	Description
IC230	8-759-234-77	s	IC TC4S66F
IC231	8-759-234-77	s	IC TC4S66F
IC232	8-759-986-32	s	IC 74ACT244SJ
IC233	8-759-196-97	s	IC TC7SH32FU (TE85R)
IC234	8-759-485-82	s	IC MC34182DR2
IC300	8-759-524-28	s	IC TC74VHC245FT(EL)
IC301	8-759-524-28	s	IC TC74VHC245FT(EL)
IC302	8-759-524-28	s	IC TC74VHC245FT(EL)
IC303	8-759-524-28	s	IC TC74VHC245FT(EL)
IC304	8-759-523-78	s	IC TC74VHC00FT(EL)
IC305	8-759-523-78	s	IC TC74VHC00FT(EL)
IC306	8-759-524-28	s	IC TC74VHC245FT(EL)
IC307	8-759-524-28	s	IC TC74VHC245FT(EL)
IC308	8-759-523-78	s	IC TC74VHC00FT(EL)
IC310	8-759-524-28	s	IC TC74VHC245FT(EL)
IC400	8-759-391-30	s	IC 74LVX3245QSCX
IC401	8-759-524-28	s	IC TC74VHC245FT(EL)
IC402	8-759-524-28	s	IC TC74VHC245FT(EL)
IC405	8-759-271-86	s	IC TC7SH04FU
IC406	8-759-251-40	s	IC MB88E346PFV-G-BND-ER
IC407	8-759-491-46	s	IC TC74VHCT04AFT (EL)
IC411	8-759-391-30	s	IC 74LVX3245QSCX
IC412	8-759-391-30	s	IC 74LVX3245QSCX
IC413	8-752-381-56	s	IC CXD1095AR
IC414	8-759-524-07	s	IC TC74VHC138FT(EL)
IC415	8-759-196-96	s	IC TC7SH08FU (TE85R)
IC416	8 759 271 86	s	IC TC7SH04FU
L100	1-410-393-11	s	CHIP INDUCTOR 100UH (3225)
L101	1-410-393-11	s	CHIP INDUCTOR 100UH (3225)
L102	1-410-393-11	s	CHIP INDUCTOR 100UH (3225)
L103	1-410-393-11	s	CHIP INDUCTOR 100UH (3225)
L104	1-410-393-11	s	CHIP INDUCTOR 100UH (3225)
L105	1-410-393-11	s	CHIP INDUCTOR 100UH (3225)
L106	1-410-385-11	s	CHIP INDUCTOR 22UH (3225)
L107	1-410-388-31	s	CHIP INDUCTOR 39UH
L108	1-410-393-11	s	CHIP INDUCTOR 100UH (3225)
L201	1-410-381-11	s	CHIP INDUCTOR 10UH (3225)
L202	1-410-381-11	s	CHIP INDUCTOR 10UH (3225)
L203	1-410-393-11	s	CHIP INDUCTOR 100UH (3225)
L204	1-410-393-11	s	CHIP INDUCTOR 100UH (3225)
L205	1-410-389-31	s	INDUCTOR,CHIP 47UH (3225)
L206	1-410-389-31	s	INDUCTOR,CHIP 47UH (3225)
L207	1-410-389-31	s	INDUCTOR,CHIP 47UH (3225)
L208	1-410-389-31	s	INDUCTOR,CHIP 47UH (3225)
L401	1-424-641-11	s	COIL,CHOKE (SHIELD)
L402	1-424-641-11	s	COIL,CHOKE (SHIELD)
L403	1-409-579-11	s	COIL, CHOKE 8.2UH
L404	1-409-579-11	s	COIL, CHOKE 8.2UH
L405	1-409-579-11	s	COIL, CHOKE 8.2UH
L406	1-409-579-11	s	COIL, CHOKE 8.2UH
Q100	8-729-028-91	s	TRANSISTOR DTA144EUA-T106
Q101	8-729-140-63	s	TRANSISTOR 2SA1611-M5M6
Q102	8-729-140-63	s	TRANSISTOR 2SA1611-M5M6
Q103	8-729-143-07	s	TRANSISTOR 2SA1610-Y33
Q104	8-729-029-14	s	TRANSISTOR DTC144EUA-T106
Q105	8-729-143-07	s	TRANSISTOR 2SA1610-Y33
Q106	8-729-117-32	s	TRANSISTOR 2SC4177
Q107	8-729-117-32	s	TRANSISTOR 2SC4177

(TG-191 BOARD)

Ref. No. or Q'ty	Part No.	SP	Description
Q108	8-729-117-32	s	TRANSISTOR 2SC4177
Q109	8-729-140-63	s	TRANSISTOR 2SA1611-M5M6
Q110	8-729-140-63	s	TRANSISTOR 2SA1611-M5M6
Q111	8-729-117-32	s	TRANSISTOR 2SC4177
Q112	8-729-028-91	s	TRANSISTOR DTA144EUA-T106
Q201	8-729-117-32	s	TRANSISTOR 2SC4177
Q202	8-729-140-63	s	TRANSISTOR 2SA1611-M5M6
R100	1-218-720-11	s	RESISTOR,CHIP 15K 1/16W(1608)
R101	1-218-692-11	s	RESISTOR,CHIP 1.0K 1/16W(1608)
R103	1-218-692-11	s	RESISTOR,CHIP 1.0K 1/16W(1608)
R104	1-218-694-11	s	RESISTOR CHIP 1.2K1/16W(1608)
R105	1-218-660-91	s	RESISTOR CHIP 47 1/16W (1608)
R106	1-218-690-11	s	RESISTOR CHIP 820 1/16W (1608)
R107	1-218-716-11	s	RESISTOR,CHIP 10K 1/16W(1608)
R108	1-218-716-11	s	RESISTOR,CHIP 10K 1/16W(1608)
R109	1-216-864-11	s	RESISTOR,CHIP 0 1/16W (1608)
R110	1-216-864-11	s	RESISTOR,CHIP 0 1/16W (1608)
R111	1-218-692-11	s	RESISTOR,CHIP 1.0K 1/16W(1608)
R112	1-218-730-11	s	RESISTOR METAL FILM CHIP 39K
R113	1-216-857-11	s	RESISTOR,CHIP 1.0M 1/16W 1608
R114	1-218-718-11	s	RESISTOR CHIP 12K 1/16W (1608)
R115	1-218-668-11	s	RESISTOR,CHIP 100 1/16W (1608)
R116	1-216-857-11	s	RESISTOR,CHIP 1.0M 1/16W 1608
R117	1-216-857-11	s	RESISTOR,CHIP 1.0M 1/16W 1608
R118	1-216-857-11	s	RESISTOR,CHIP 1.0M 1/16W 1608
R119	1-218-740-11	s	RESISTOR,CHIP 100K 1/16W(1608)
R120	1 218 692 11	s	RESISTOR,CHIP 1.0K 1/16W(1608)
R121	1-218-740-11	s	RESISTOR,CHIP 100K 1/16W(1608)
R122	1-218-702-11	s	RESISTOR CHIP 2.7K 1/16W(1608)
R123	1-218-692-11	s	RESISTOR,CHIP 1.0K 1/16W(1608)
R124	1-218-700-11	s	RESISTOR,CHIP 2.2K 1/16W(1608)
R125	1-218-692-11	s	RESISTOR,CHIP 1.0K 1/16W(1608)
R126	1-218-732-11	s	RESISTOR,CHIP 47K 1/16W(1608)
R127	1-218-736-11	s	RESISTOR,CHIP 68K 1/16W(1608)
R128	1-218-726-11	s	RESISTOR CHIP 27K 1/16W (1608)
R129	1-218-740-11	s	RESISTOR,CHIP 100K 1/16W(1608)
R130	1-218-692-11	s	RESISTOR,CHIP 1.0K 1/16W(1608)
R131	1-218-692-11	s	RESISTOR,CHIP 1.0K 1/16W(1608)
R132	1-218-692-11	s	RESISTOR,CHIP 1.0K 1/16W(1608)
R133	1-218-700-11	s	RESISTOR,CHIP 2.2K 1/16W(1608)
R134	1-218-700-11	s	RESISTOR,CHIP 2.2K 1/16W(1608)
R135	1-218-700-11	s	RESISTOR,CHIP 2.2K 1/16W(1608)
R136	1-218-700-11	s	RESISTOR,CHIP 2.2K 1/16W(1608)
R137	1-218-716-11	s	RESISTOR,CHIP 10K 1/16W(1608)
R138	1-218-692-11	s	RESISTOR,CHIP 1.0K 1/16W(1608)
R139	1-218-716-11	s	RESISTOR,CHIP 10K 1/16W(1608)
R140	1-218-716-11	s	RESISTOR,CHIP 10K 1/16W(1608)
R141	1-218-700-11	s	RESISTOR,CHIP 2.2K 1/16W(1608)
R142	1-218-704-11	s	RESISTOR,CHIP 3.3K 1/16W(1608)
R143	1-218-716-11	s	RESISTOR,CHIP 10K 1/16W(1608)
R144	1-216-857-11	s	RESISTOR,CHIP 1.0M 1/16W 1608
R145	1-216-863-11	s	RESISTOR,CHIP 3.3M 1/16W 1608
R146	1-216-863-11	s	RESISTOR,CHIP 3.3M 1/16W 1608
R147	1-218-692-11	s	RESISTOR,CHIP 1.0K 1/16W(1608)
R148	1-218-692-11	s	RESISTOR,CHIP 1.0K 1/16W(1608)
R149	1-216-864-11	s	RESISTOR,CHIP 0 1/16W (1608)
R150	1-218-700-11	s	RESISTOR,CHIP 2.2K 1/16W(1608)
R151	1-216-789-11	s	RESISTOR,CHIP 2.2 1/16W(1608)

(TG-191 BOARD)

Ref. No. or Q'ty	Part No.	SP	Description
R152	1-218-716-11	s	RESISTOR,CHIP 10K 1/16W(1608)
R153	1-216-857-11	s	RESISTOR,CHIP 1.0M 1/16W 1608
R154	1-218-720-11	s	RESISTOR,CHIP 15K 1/16W(1608)
R155	1-218-723-11	s	RESISTOR,CHIP 20K 1/16W(1608)
R156	1-218-692-11	s	RESISTOR,CHIP 1.0K 1/16W(1608)
R157	1-218-702-11	s	RESISTOR CHIP 2.7K 1/16W(1608)
R158	1-218-692-11	s	RESISTOR,CHIP 1.0K 1/16W(1608)
R159	1-218-716-11	s	RESISTOR,CHIP 10K 1/16W(1608)
R160	1-218-720-11	s	RESISTOR,CHIP 15K 1/16W(1608)
R161	1-218-708-11	s	RESISTOR,CHIP 4.7K 1/16W(1608)
R162	1-216-864-11	s	RESISTOR,CHIP 0 1/16W (1608)
R163	1-218-708-11	s	RESISTOR,CHIP 4.7K 1/16W(1608)
R164	1-218-716-11	s	RESISTOR,CHIP 10K 1/16W(1608)
R165	1-218-676-11	s	RESISTOR,CHIP 220 1/16W(1608)
R166	1-218-700-11	s	RESISTOR,CHIP 2.2K 1/16W(1608)
R167	1-218-729-11	s	RESISTOR,CHIP 36K 1/16W(1608)
R168	1-218-692-11	s	RESISTOR,CHIP 1.0K 1/16W(1608)
R169	1-218-734-11	s	RESISTOR,CHIP 56K 1/16W(1608)
R171	1-218-692-11	s	RESISTOR,CHIP 1.0K 1/16W(1608)
R172	1-218-700-11	s	RESISTOR,CHIP 2.2K 1/16W(1608)
R173	1-218-692-11	s	RESISTOR,CHIP 1.0K 1/16W(1608)
R174	1-218-728-11	s	RESISTOR,METAL 33K 1/16W
R175	1-218-728-11	s	RESISTOR,METAL 33K 1/16W
R176	1-216-864-11	s	RESISTOR,CHIP 0 1/16W (1608)
R177	1-218-692-11	s	RESISTOR,CHIP 1.0K 1/16W(1608)
R178	1-218-692-11	s	RESISTOR,CHIP 1.0K 1/16W(1608)
R179	1 218 668 11	s	RESISTOR,CHIP 100 1/16W (1608)
R180	1-218-740-11	s	RESISTOR,CHIP 100K 1/16W(1608)
R181	1-218-700-11	s	RESISTOR,CHIP 2.2K 1/16W(1608)
R182	1-218-660-91	s	RESISTOR CHIP 47 1/16W (1608)
R183	1-218-740-11	s	RESISTOR,CHIP 100K 1/16W(1608)
R184	1-218-692-11	s	RESISTOR,CHIP 1.0K 1/16W(1608)
R185	1-218-692-11	s	RESISTOR,CHIP 1.0K 1/16W(1608)
R186	1-216-853-11	s	RESISTOR,CHIP 470K 1/16W(1608)
R187	1-218-692-11	s	RESISTOR,CHIP 1.0K 1/16W(1608)
R188	1-218-716-11	s	RESISTOR,CHIP 10K 1/16W(1608)
R189	1-218-712-11	s	RESISTOR,METAL 6.8K 1/16W
R190	1-218-716-11	s	RESISTOR,CHIP 10K 1/16W(1608)
R191	1-218-740-11	s	RESISTOR,CHIP 100K 1/16W(1608)
R192	1-218-724-11	s	RESISTOR,CHIP 22K 1/16W(1608)
R193	1-218-716-11	s	RESISTOR,CHIP 10K 1/16W(1608)
R194	1-218-668-11	s	RESISTOR,CHIP 100 1/16W (1608)
R195	1-218-708-11	s	RESISTOR,CHIP 4.7K 1/16W(1608)
R196	1-218-716-11	s	RESISTOR,CHIP 10K 1/16W(1608)
R197	1-218-740-11	s	RESISTOR,CHIP 100K 1/16W(1608)
R198	1-218-708-11	s	RESISTOR,CHIP 4.7K 1/16W(1608)
R199	1-218-716-11	s	RESISTOR,CHIP 10K 1/16W(1608)
R200	1-218-684-11	s	RESISTOR CHIP 470 1/16W (1608)
R201	1-218-716-11	s	RESISTOR,CHIP 10K 1/16W(1608)
R202	1-218-734-11	s	RESISTOR,CHIP 56K 1/16W(1608)
R203	1-216-864-11	s	RESISTOR,CHIP 0 1/16W (1608)
R204	1-218-738-11	s	RESISTOR,CHIP 82K 1/16W(1608)
R205	1-218-708-11	s	RESISTOR,CHIP 4.7K 1/16W(1608)
R206	1-218-692-11	s	RESISTOR,CHIP 1.0K 1/16W(1608)
R207	1-218-716-11	s	RESISTOR,CHIP 10K 1/16W(1608)
R208	1-218-728-11	s	RESISTOR,METAL 33K 1/16W
R209	1-218-716-11	s	RESISTOR,CHIP 10K 1/16W(1608)
R210	1-218-660-91	s	RESISTOR CHIP 47 1/16W (1608)
R211	1-218-668-11	s	RESISTOR,CHIP 100 1/16W (1608)

(TG-191 BOARD)

Ref. No. or Q'ty	Part No.	SP	Description
R212	1-218-692-11	s	RESISTOR,CHIP 1.0K 1/16W(1608)
R213	1-218-706-11	s	RESISTOR,CHIP 3.9K 1/16W(1608)
R214	1-218-704-11	s	RESISTOR,CHIP 3.3K 1/16W(1608)
R215	1-218-712-11	s	RESISTOR,METAL 6.8K 1/16W
R216	1-218-684-11	s	RESISTOR CHIP 470 1/16W (1608)
R217	1-218-716-11	s	RESISTOR,CHIP 10K 1/16W(1608)
R218	1-218-716-11	s	RESISTOR,CHIP 10K 1/16W(1608)
R219	1-218-684-11	s	RESISTOR CHIP 470 1/16W (1608)
R220	1-218-726-11	s	RESISTOR CHIP 27K 1/16W (1608)
R221	1-218-716-11	s	RESISTOR,CHIP 10K 1/16W(1608)
R222	1-218-668-11	s	RESISTOR,CHIP 100 1/16W (1608)
R223	1-218-740-11	s	RESISTOR,CHIP 100K 1/16W(1608)
R224	1-216-857-11	s	RESISTOR,CHIP 1.0M 1/16W 1608
R225	1-216-857-11	s	RESISTOR,CHIP 1.0M 1/16W 1608
R226	1-218-740-11	s	RESISTOR,CHIP 100K 1/16W(1608)
R228	1-218-724-11	s	RESISTOR,CHIP 22K 1/16W(1608)
R229	1-218-724-11	s	RESISTOR,CHIP 22K 1/16W(1608)
R230	1-218-668-11	s	RESISTOR,CHIP 100 1/16W (1608)
R231	1-218-706-11	s	RESISTOR,CHIP 3.9K 1/16W(1608)
R232	1-218-732-11	s	RESISTOR,CHIP 47K 1/16W(1608)
R233	1-218-716-11	s	RESISTOR,CHIP 10K 1/16W(1608)
R234	1-218-704-11	s	RESISTOR,CHIP 3.3K 1/16W(1608)
R235	1-218-712-11	s	RESISTOR,METAL 6.8K 1/16W
R236	1-218-708-11	s	RESISTOR,CHIP 4.7K 1/16W(1608)
R237	1-218-684-11	s	RESISTOR CHIP 470 1/16W (1608)
R238	1-218-684-11	s	RESISTOR CHIP 470 1/16W (1608)
R239	1 218 726 11	s	RESISTOR CHIP 27K 1/16W (1608)
R240	1-218-716-11	s	RESISTOR,CHIP 10K 1/16W(1608)
R241	1-218-668-11	s	RESISTOR,CHIP 100 1/16W (1608)
R242	1-218-668-11	s	RESISTOR,CHIP 100 1/16W (1608)
R243	1-218-716-11	s	RESISTOR,CHIP 10K 1/16W(1608)
R244	1-218-652-11	s	RESISTOR,CHIP 22 1/16W (1608)
R245	1-218-738-11	s	RESISTOR,CHIP 82K 1/16W(1608)
R246	1-218-660-91	s	RESISTOR CHIP 47 1/16W (1608)
R247	1-218-684-11	s	RESISTOR CHIP 470 1/16W (1608)
R248	1-218-716-11	s	RESISTOR,CHIP 10K 1/16W(1608)
R249	1-218-716-11	s	RESISTOR,CHIP 10K 1/16W(1608)
R250	1-218-708-11	s	RESISTOR,CHIP 4.7K 1/16W(1608)
R251	1-218-726-11	s	RESISTOR CHIP 27K 1/16W (1608)
R252	1-216-855-11	s	RESISTOR,CHIP 680K 1/16W 1608
R253	1-218-740-11	s	RESISTOR,CHIP 100K 1/16W(1608)
R254	1-218-740-11	s	RESISTOR,CHIP 100K 1/16W(1608)
R255	1-218-668-11	s	RESISTOR,CHIP 100 1/16W (1608)
R256	1-218-700-11	s	RESISTOR,CHIP 2.2K 1/16W(1608)
R257	1-218-713-11	s	RESISTOR,METAL 7.5K 1/16W
R258	1-218-712-11	s	RESISTOR,METAL 6.8K 1/16W
R259	1-218-719-11	s	RESISTOR,METAL 13K 1/16
R260	1-216-864-11	s	RESISTOR,CHIP 0 1/16W (1608)
R261	1-218-730-11	s	RESISTOR METAL FILM CHIP 39K
R262	1-216-864-11	s	RESISTOR,CHIP 0 1/16W (1608)
R263	1-218-700-11	s	RESISTOR,CHIP 2.2K 1/16W(1608)
R264	1-216-864-11	s	RESISTOR,CHIP 0 1/16W (1608)
R265	1-216-864-11	s	RESISTOR,CHIP 0 1/16W (1608)
R266	1-216-864-11	s	RESISTOR,CHIP 0 1/16W (1608)
R267	1-216-864-11	s	RESISTOR,CHIP 0 1/16W (1608)
R268	1-218-716-11	s	RESISTOR,CHIP 10K 1/16W(1608)
R269	1-218-716-11	s	RESISTOR,CHIP 10K 1/16W(1608)
R270	1-218-716-11	s	RESISTOR,CHIP 10K 1/16W(1608)
R271	1-218-703-11	s	RESISTOR,METAL 3.0K 1/16(1608)

(TG-191 BOARD)

Ref. No. or Q'ty	Part No.	SP	Description
R272	1-218-716-11	s	RESISTOR,CHIP 10K 1/16W(1608)
R273	1-218-668-11	s	RESISTOR,CHIP 100 1/16W (1608)
R274	1-218-668-11	s	RESISTOR,CHIP 100 1/16W (1608)
R275	1-218-692-11	s	RESISTOR,CHIP 1.0K 1/16W(1608)
R276	1-218-692-11	s	RESISTOR,CHIP 1.0K 1/16W(1608)
R277	1-216-864-11	s	RESISTOR,CHIP 0 1/16W (1608)
R278	1-218-740-11	s	RESISTOR,CHIP 100K 1/16W(1608)
R279	1-216-864-11	s	RESISTOR,CHIP 0 1/16W (1608)
R280	1-218-740-11	s	RESISTOR,CHIP 100K 1/16W(1608)
R281	1-216-864-11	s	RESISTOR,CHIP 0 1/16W (1608)
R282	1-218-740-11	s	RESISTOR,CHIP 100K 1/16W(1608)
R283	1-218-716-11	s	RESISTOR,CHIP 10K 1/16W(1608)
R284	1-218-703-11	s	RESISTOR,METAL 3.0K 1/16(1608)
R285	1-218-716-11	s	RESISTOR,CHIP 10K 1/16W(1608)
R286	1-218-748-11	s	RESISTOR,CHIP 220K 1/16W(1608)
R287	1-216-864-11	s	RESISTOR,CHIP 0 1/16W (1608)
R288	1-218-740-11	s	RESISTOR,CHIP 100K 1/16W(1608)
R289	1-218-716-11	s	RESISTOR,CHIP 10K 1/16W(1608)
R290	1-218-719-11	s	RESISTOR,METAL 13K 1/16
R291	1-218-724-11	s	RESISTOR,CHIP 22K 1/16W(1608)
R292	1-218-692-11	s	RESISTOR,CHIP 1.0K 1/16W(1608)
R293	1-218-692-11	s	RESISTOR,CHIP 1.0K 1/16W(1608)
R294	1-218-716-11	s	RESISTOR,CHIP 10K 1/16W(1608)
R295	1-216-864-11	s	RESISTOR,CHIP 0 1/16W (1608)
R296	1-218-716-11	s	RESISTOR,CHIP 10K 1/16W(1608)
R297	1-218-740-11	s	RESISTOR,CHIP 100K 1/16W(1608)
R300	1 218 652 11	s	RESISTOR,CHIP 22 1/16W (1608)
R305	1-218-652-11	s	RESISTOR,CHIP 22 1/16W (1608)
R307	1-218-652-11	s	RESISTOR,CHIP 22 1/16W (1608)
R316	1-218-684-11	s	RESISTOR CHIP 470 1/16W (1608)
R317	1-218-684-11	s	RESISTOR CHIP 470 1/16W (1608)
R318	1-218-684-11	s	RESISTOR CHIP 470 1/16W (1608)
R319	1-218-684-11	s	RESISTOR CHIP 470 1/16W (1608)
R320	1-218-702-11	s	RESISTOR CHIP 2.7K 1/16W(1608)
R321	1-218-702-11	s	RESISTOR CHIP 2.7K 1/16W(1608)
R322	1-218-702-11	s	RESISTOR CHIP 2.7K 1/16W(1608)
R323	1-218-702-11	s	RESISTOR CHIP 2.7K 1/16W(1608)
R324	1-218-716-11	s	RESISTOR,CHIP 10K 1/16W(1608)
R325	1-218-684-11	s	RESISTOR CHIP 470 1/16W (1608)
R326	1-218-716-11	s	RESISTOR,CHIP 10K 1/16W(1608)
R327	1-218-684-11	s	RESISTOR CHIP 470 1/16W (1608)
R328	1-218-716-11	s	RESISTOR,CHIP 10K 1/16W(1608)
R329	1-218-684-11	s	RESISTOR CHIP 470 1/16W (1608)
R330	1-218-716-11	s	RESISTOR,CHIP 10K 1/16W(1608)
R331	1-218-684-11	s	RESISTOR CHIP 470 1/16W (1608)
R332	1-218-668-11	s	RESISTOR,CHIP 100 1/16W (1608)
R333	1-218-668-11	s	RESISTOR,CHIP 100 1/16W (1608)
R334	1-218-668-11	s	RESISTOR,CHIP 100 1/16W (1608)
R336	1-218-684-11	s	RESISTOR CHIP 470 1/16W (1608)
R337	1-218-702-11	s	RESISTOR CHIP 2.7K 1/16W(1608)
R338	1-218-684-11	s	RESISTOR CHIP 470 1/16W (1608)
R339	1-218-716-11	s	RESISTOR,CHIP 10K 1/16W(1608)
R340	1-218-668-11	s	RESISTOR,CHIP 100 1/16W (1608)
R343	1-218-668-11	s	RESISTOR,CHIP 100 1/16W (1608)
R347	1-216-864-11	s	RESISTOR,CHIP 0 1/16W (1608)
R348	1-216-864-11	s	RESISTOR,CHIP 0 1/16W (1608)
R349	1-216-864-11	s	RESISTOR,CHIP 0 1/16W (1608)
R350	1-216-864-11	s	RESISTOR,CHIP 0 1/16W (1608)
R351	1-216-864-11	s	RESISTOR,CHIP 0 1/16W (1608)

(TG-191 BOARD)

Ref. No. or Q'ty	Part No.	SP	Description
R352	1-216-864-11	s	RESISTOR,CHIP 0 1/16W (1608)
R353	1-216-864-11	s	RESISTOR,CHIP 0 1/16W (1608)
R354	1-216-864-11	s	RESISTOR,CHIP 0 1/16W (1608)
R355	1-216-864-11	s	RESISTOR,CHIP 0 1/16W (1608)
R356	1-216-864-11	s	RESISTOR,CHIP 0 1/16W (1608)
R361	1-218-652-11	s	RESISTOR,CHIP 22 1/16W (1608)
R362	1-218-652-11	s	RESISTOR,CHIP 22 1/16W (1608)
R363	1-218-652-11	s	RESISTOR,CHIP 22 1/16W (1608)
R364	1-218-652-11	s	RESISTOR,CHIP 22 1/16W (1608)
R365	1-218-652-11	s	RESISTOR,CHIP 22 1/16W (1608)
R366	1-218-652-11	s	RESISTOR,CHIP 22 1/16W (1608)
R373	1-216-864-11	s	RESISTOR,CHIP 0 1/16W (1608)
R377	1-218-740-11	s	RESISTOR,CHIP 100K 1/16W(1608)
R393	1-218-740-11	s	RESISTOR,CHIP 100K 1/16W(1608)
R394	1-218-740-11	s	RESISTOR,CHIP 100K 1/16W(1608)
R395	1-216-864-11	s	RESISTOR,CHIP 0 1/16W (1608)
R396	1-218-740-11	s	RESISTOR,CHIP 100K 1/16W(1608)
R397	1-218-700-11	s	RESISTOR,CHIP 2.2K 1/16W(1608)
R398	1-218-700-11	s	RESISTOR,CHIP 2.2K 1/16W(1608)
R399	1-218-712-11	s	RESISTOR,METAL 6.8K 1/16W
R400	1-216-864-11	s	RESISTOR,CHIP 0 1/16W (1608)
R401	1-218-700-11	s	RESISTOR,CHIP 2.2K 1/16W(1608)
R402	1-218-684-11	s	RESISTOR CHIP 470 1/16W (1608)
R409	1-218-740-11	s	RESISTOR,CHIP 100K 1/16W(1608)
R410	1-216-864-11	s	RESISTOR,CHIP 0 1/16W (1608)
R411	1-216-864-11	s	RESISTOR,CHIP 0 1/16W (1608)
R414	1 218 676 11	s	RESISTOR,CHIP 220 1/16W(1608)
R415	1-216-864-11	s	RESISTOR,CHIP 0 1/16W (1608)
R416	1-218-716-11	s	RESISTOR,CHIP 10K 1/16W(1608)
R420	1-218-668-11	s	RESISTOR,CHIP 100 1/16W (1608)
R421	1-218-668-11	s	RESISTOR,CHIP 100 1/16W (1608)
R422	1-216-864-11	s	RESISTOR,CHIP 0 1/16W (1608)
R423	1-216-864-11	s	RESISTOR,CHIP 0 1/16W (1608)
R424	1-216-864-11	s	RESISTOR,CHIP 0 1/16W (1608)
R425	1-216-864-11	s	RESISTOR,CHIP 0 1/16W (1608)
R426	1-216-864-11	s	RESISTOR,CHIP 0 1/16W (1608)
R427	1-216-864-11	s	RESISTOR,CHIP 0 1/16W (1608)
R428	1-216-864-11	s	RESISTOR,CHIP 0 1/16W (1608)
RB1	1-239-409-11	s	RESISTOR NETWORK 47 (1608)
RB2	1-239-409-11	s	RESISTOR NETWORK 47 (1608)
RB3	1-239-409-11	s	RESISTOR NETWORK 47 (1608)
RB4	1-239-409-11	s	RESISTOR NETWORK 47 (1608)
RB5	1-239-409-11	s	RESISTOR NETWORK 47 (1608)
RB6	1-239-409-11	s	RESISTOR NETWORK 47 (1608)
RB7	1-239-409-11	s	RESISTOR NETWORK 47 (1608)
RB8	1-239-409-11	s	RESISTOR NETWORK 47 (1608)
RB9	1-239-409-11	s	RESISTOR NETWORK 47 (1608)
RB10	1-239-409-11	s	RESISTOR NETWORK 47 (1608)
RB11	1-239-409-11	s	RESISTOR NETWORK 47 (1608)
RB101	1-233-270-11	o	RESISTOR,NETWORK (8 GANG) 10K
RB400	1-239-416-11	s	NETWORK, RESISTOR 220 (1608)
RB401	1-233-665-11	s	NETWORK, RES (8 GANG) 47K
RB402	1-233-665-11	s	NETWORK, RES (8 GANG) 47K
RB403	1-233-665-11	s	NETWORK, RES (8 GANG) 47K
RB404	1-233-665-11	s	NETWORK, RES (8 GANG) 47K
RB405	1-233-665-11	s	NETWORK, RES (8 GANG) 47K
RB406	1-233-665-11	s	NETWORK, RES (8 GANG) 47K
RB407	1-239-416-11	s	NETWORK, RESISTOR 220 (1608)

(TG-191 BOARD)

Ref. No. or Q'ty	Part No.	SP	Description
RB408	1-236-908-11	s	RESISTOR,NETWORK 10K (3216)
RB409	1-233-665-11	s	NETWORK, RES (8 GANG) 47K
RB410	1-233-665-11	s	NETWORK, RES (8 GANG) 47K

VFD ASSEMBLY

Ref. No. or Q'ty	Part No.	SP	Description
1pc	4-352-844-01	s	PIN, LEAD, COATING
C3	1-135-210-11	s	CAP, CHIP TANTALUM ELECT 4.7MF
C4	1-163-038-00	s	CAP, CERAMIC 100000PF F (2012)
C5	1-163-038-00	s	CAP, CERAMIC 100000PF F (2012)
C6	1-163-038-00	s	CAP, CERAMIC 100000PF F (2012)
C7	1-163-038-00	s	CAP, CERAMIC 100000PF F (2012)
C10	1-107-419-11	s	CAP, CHIP ELECT 22MF
C11	1-107-419-11	s	CAP, CHIP ELECT 22MF
C12	1-163-015-11	s	CAP, CHIP CERAMIC 3300PF B 2012
C13	1-104-607-11	s	CAP, CHIP ELECT 47MF
C14	9-884-661-01	s	CAPACITOR ELECT 8.2MF
C15	9-884-661-01	s	CAPACITOR ELECT 8.2MF
C16	1-163-038-00	s	CAP, CERAMIC 100000PF F (2012)
C17	1-163-038-00	s	CAP, CERAMIC 100000PF F (2012)
C18	1-163-038-00	s	CAP, CERAMIC 100000PF F (2012)
C19	1-163-038-00	s	CAP, CERAMIC 100000PF F (2012)
C20	1-163-038-00	s	CAP, CERAMIC 100000PF F (2012)
C21	1-163-038-00	s	CAP, CERAMIC 100000PF F (2012)
C22	1-163-038-00	s	CAP, CERAMIC 100000PF F (2012)
C23	1-163-038-00	s	CAP, CERAMIC 100000PF F (2012)
C24	1-163-038-00	s	CAP, CERAMIC 100000PF F (2012)
C25	1-163-038-00	s	CAP, CERAMIC 100000PF F (2012)
C26	1-163-038-00	s	CAP, CERAMIC 100000PF F (2012)
C27	1-163-038-00	s	CAP, CERAMIC 100000PF F (2012)
C28	1-163-038-00	s	CAP, CERAMIC 100000PF F (2012)
C29	1-163-038-00	s	CAP, CERAMIC 100000PF F (2012)
C30	1-163-038-00	s	CAP, CERAMIC 100000PF F (2012)
C31	1-163-038-00	s	CAP, CERAMIC 100000PF F (2012)
C32	1-163-038-00	s	CAP, CERAMIC 100000PF F (2012)
C33	1-163-038-00	s	CAP, CERAMIC 100000PF F (2012)
C34	1-163-038-00	s	CAP, CERAMIC 100000PF F (2012)
C35	1-163-038-00	s	CAP, CERAMIC 100000PF F (2012)
C36	1-163-038-00	s	CAP, CERAMIC 100000PF F (2012)
C37	1-163-038-00	s	CAP, CERAMIC 100000PF F (2012)
C38	1-163-038-00	s	CAP, CERAMIC 100000PF F (2012)
C39	1-163-038-00	s	CAP, CERAMIC 100000PF F (2012)
C40	1-163-038-00	s	CAP, CERAMIC 100000PF F (2012)
C41	1-163-038-00	s	CAP, CERAMIC 100000PF F (2012)
C42	1-163-038-00	s	CAP, CERAMIC 100000PF F (2012)
C43	1-163-038-00	s	CAP, CERAMIC 100000PF F (2012)
C44	1-135-072-21	s	CAP, CHIP TANTALUM ELECT 0.22MF
C45	1-113-682-11	s	CAP, CHIP TANTALUM ELECT 33MF
C46	1-107-689-11	s	CAP, CHIP TANTALUM ELECT 1MF
C47	1-104-581-11	s	CAP, CHIP TANTALUM ELECT 10MF 16V
C48	1-104-581-11	s	CAP, CHIP TANTALUM ELECT 10MF 16V
C49	1-163-235-11	s	CAP, CHIP CERAMIC 22PF CH 2012
C50	1-163-235-11	s	CAP, CHIP CERAMIC 22PF CH 2012
C51	9-884-655-01	s	CAPACITOR, CERAMIC 0.047MF
C52	1-163-038-00	s	CAP, CERAMIC 100000PF F (2012)
C53	1-163-038-00	s	CAP, CERAMIC 100000PF F (2012)
C54	1-163-038-00	s	CAP, CERAMIC 100000PF F (2012)
C55	1-163-271-11	s	CAP, CHIP CERAMIC 680PF CH 2012
CN1	1-764-007-21	s	PIN, CONNECTOR (SMD) 12P
CN2	1-691-551-21	s	PIN, CONNECTOR (SMD) 8P
CN3	1-750-143-11	s	PIN, SIL 7P
CN4	1-580-055-21	s	PIN, CONNECTOR (SMD) 2P
CN14	1-750-143-11	s	PIN, SIL 7P
D1	8-719-108-24	s	DIODE 1SS223

(VFD ASSEMBLY)

Ref. No. or Q'ty	Part No.	SP	Description
D2	8-719-108-24	s	DIODE 1SS223
D3	8-719-108-24	s	DIODE 1SS223
D4	8-719-051-03	s	DIODE EC11FS4-TE12L5
D5	8-719-108-24	s	DIODE 1SS223
D6	8-719-054-55	s	DIODE 1SS306 (TE85L)
F1	⚠ 9-884-659-01	s	FUSE
L1	9-884-658-01	s	COIL 10uH
LCD	1-801-194-11	s	LCD
LED1	9-885-000-14	s	LED TLYE160A
LED2	8-719-076-36	s	DIODE TLGE160
LED3	8-719-032-78	s	LED GL3UR8
LED4	8-719-061-82	s	LED TLSU1002 (TPX1, SONY)
LED5	8-719-061-82	s	LED TLSU1002 (TPX1, SONY)
LED6	8-719-076-36	s	DIODE TLGE160
LED7	8-719-076-36	s	DIODE TLGE160
LED8	8-719-076-36	s	DIODE TLGE160
LED9	8-719-061-82	s	LED TLSU1002 (TPX1, SONY)
LED10	8-719-062-48	s	DIODE CL-200YG-C-TS
LED11	8-719-062-48	s	DIODE CL-200YG-C-TS
LED12	8-719-062-48	s	DIODE CL-200YG-C-TS
LED13	8-719-062-48	s	DIODE CL-200YG-C-TS
LED14	8-719-062-48	s	DIODE CL-200YG-C-TS
LED15	8-719-062-48	s	DIODE CL-200YG-C-TS
LED16	8-719-062-48	s	DIODE CL-200YG-C-TS
LED17	8 719 062 48	s	DIODE CL 200YG C TS
LED18	8-719-062-48	s	DIODE CL-200YG-C-TS
LED19	8-719-062-48	s	DIODE CL-200YG-C-TS
LED20	8-719-032-78	s	LED GL3UR8
Q1	8-729-230-49	s	TRANSISTOR 2SC2712-YG
Q2	8-729-202-37	s	TRANSISTOR 2SC3303-Y
Q3	9-884-660-01	s	TRANSISTOR 2SC2881 (O.Y) TE12R
Q4	8-729-230-49	s	TRANSISTOR 2SC2712-YG
Q5	8-729-230-49	s	TRANSISTOR 2SC2712-YG
Q6	8-729-230-49	s	TRANSISTOR 2SC2712-YG
Q7	8-729-028-73	s	TRANSISTOR DTA114EUA-T106
Q8	8-729-028-73	s	TRANSISTOR DTA114EUA-T106
Q9	8-729-028-73	s	TRANSISTOR DTA114EUA-T106
Q10	8-729-028-73	s	TRANSISTOR DTA114EUA-T106
Q11	8-729-028-73	s	TRANSISTOR DTA114EUA-T106
Q12	8-729-028-73	s	TRANSISTOR DTA114EUA-T106
Q13	8-729-028-73	s	TRANSISTOR DTA114EUA-T106
Q14	8-729-028-73	s	TRANSISTOR DTA114EUA-T106
Q15	8-729-028-73	s	TRANSISTOR DTA114EUA-T106
Q16	8-729-028-73	s	TRANSISTOR DTA114EUA-T106
Q17	8-729-028-73	s	TRANSISTOR DTA114EUA-T106
Q18	8-729-028-73	s	TRANSISTOR DTA114EUA-T106
Q19	8-729-028-73	s	TRANSISTOR DTA114EUA-T106
Q21	8-729-028-96	s	TRANSISTOR DTC114EUA-T106
Q22	8-729-028-73	s	TRANSISTOR DTA114EUA-T106
R1	1-236-908-11	s	NETWORK RESISTOR (CHIP) 10K
R7	1-216-833-11	s	RES, CHIP 10K
R16	1-216-637-11	s	RES, METAL FILM CHIP 270
R17	1-220-286-11	s	RES, SQUARE TYPE CHIP 12K (3225)
R18	1-216-835-11	s	RES, CHIP 15K
R19	1-218-477-11	s	RES, SQUARE TYPE CHIP 220 (3225)
R20	1-220-262-11	s	RES, SQUARE TYPE CHIP 680 (3225)
R21	1-216-813-11	s	RES, CHIP 220

http://getMANUAL.com

(VFD ASSEMBLY)

Ref. No. or Q'ty	Part No.	SP	Description
R22	1-220-265-11	s	RES, SQUARE TYPE CHIP 1.2K 3225
R23	1-220-265-11	s	RES, SQUARE TYPE CHIP 1.2K 3225
R24	1-220-258-11	s	RES, SQUARE TYPE CHIP 100 (3225)
R25	1-220-311-11	s	RES, SQUARE TYPE CHIP 68K (3225)
R26	1-220-311-11	s	RES, SQUARE TYPE CHIP 68K (3225)
R27	1-220-313-11	s	RES, SQUARE TYPE CHIP 100K 3225
R28	1-220-313-11	s	RES, SQUARE TYPE CHIP 100K 3225
R30	1-216-847-11	s	RES, CHIP 150K
R31	1-216-857-11	s	RES, CHIP 1.0M
R32	1-220-313-11	s	RES, SQUARE TYPE CHIP 100K 3225
R34	1-218-477-11	s	RES, SQUARE TYPE CHIP 220 (3225)
R35	1-218-477-11	s	RES, SQUARE TYPE CHIP 220 (3225)
R37	1-216-821-11	s	RES, CHIP 1.0K
R38	1-216-821-11	s	RES, CHIP 1.0K
R39	1-220-261-11	s	RES, SQUARE TYPE CHIP 470 (3225)
R40	1-220-281-11	s	RES, SQUARE TYPE CHIP 4.7K 3225
R41	1-216-833-11	s	RES, CHIP 10K
R42	1-216-829-11	s	RES, CHIP 4.7K
R43	1-216-821-11	s	RES, CHIP 1.0K
R44	1-216-833-11	s	RES, CHIP 10K
R45	1-216-833-11	s	RES, CHIP 10K
R46	1-216-819-11	s	RES, CHIP 680
R50	1-216-819-11	s	RES, CHIP 680
R58	1-216-819-11	s	RES, CHIP 680
R62	1-216-845-11	s	RES, CHIP 100K
R63	1-216-845-11	s	RES, CHIP 100K
R64	1-216-845-11	s	RES, CHIP 100K
R65	1-216-845-11	s	RES, CHIP 100K
R66	1-216-845-11	s	RES, CHIP 100K
R67	1-216-845-11	s	RES, CHIP 100K
R68	1-216-845-11	s	RES, CHIP 100K
R69	1-216-845-11	s	RES, CHIP 100K
R70	1-216-845-11	s	RES, CHIP 100K
R71	1-216-845-11	s	RES, CHIP 100K
R72	1-216-845-11	s	RES, CHIP 100K
R73	1-216-845-11	s	RES, CHIP 100K
R74	1-216-845-11	s	RES, CHIP 100K
R75	1-216-845-11	s	RES, CHIP 100K
R76	1-216-845-11	s	RES, CHIP 100K
R77	1-216-845-11	s	RES, CHIP 100K
R78	1-216-845-11	s	RES, CHIP 100K
R79	1-216-845-11	s	RES, CHIP 100K
R80	1-216-845-11	s	RES, CHIP 100K
R81	1-216-845-11	s	RES, CHIP 100K
R82	1-216-845-11	s	RES, CHIP 100K
R83	1-216-845-11	s	RES, CHIP 100K
R85	1-239-412-11	s	NETWORK RESISTOR (CHIP) 100
R89	1-216-809-11	s	RES, CHIP 100
R90	1-216-809-11	s	RES, CHIP 100
R91	1-216-809-11	s	RES, CHIP 100
R92	1-216-809-11	s	RES, CHIP 100
R93	1-216-809-11	s	RES, CHIP 100
R94	1-216-809-11	s	RES, CHIP 100
R95	1-239-412-11	s	NETWORK RESISTOR (CHIP) 100
R99	1-216-809-11	s	RES, CHIP 100
R100	1-216-809-11	s	RES, CHIP 100
R101	1-216-809-11	s	RES, CHIP 100
R102	1-216-809-11	s	RES, CHIP 100
R103	1-239-412-11	s	NETWORK RESISTOR (CHIP) 100
R107	1-239-412-11	s	NETWORK RESISTOR (CHIP) 100

(VFD ASSEMBLY)

Ref. No. or Q'ty	Part No.	SP	Description
R110	1-216-839-11	s	RES, CHIP 33K
R111	1-216-839-11	s	RES, CHIP 33K
R113	1-216-839-11	s	RES, CHIP 33K
R114	1-216-834-11	s	RES, CHIP 12K
R115	1-216-834-11	s	RES, CHIP 12K
R116	1-216-834-11	s	RES, CHIP 12K
R117	1-216-834-11	s	RES, CHIP 12K
R118	1-216-834-11	s	RES, CHIP 12K
R119	1-216-834-11	s	RES, CHIP 12K
R120	1-216-821-11	s	RES, CHIP 1.0K
R121	1-216-821-11	s	RES, CHIP 1.0K
R122	1-216-821-11	s	RES, CHIP 1.0K
R123	1-216-821-11	s	RES, CHIP 1.0K
R124	1-216-821-11	s	RES, CHIP 1.0K
R125	1-216-821-11	s	RES, CHIP 1.0K
R126	1-216-821-11	s	RES, CHIP 1.0K
R127	1-216-821-11	s	RES, CHIP 1.0K
R128	1-216-821-11	s	RES, CHIP 1.0K
R129	1-216-821-11	s	RES, CHIP 1.0K
R130	1-216-821-11	s	RES, CHIP 1.0K
R131	1-216-821-11	s	RES, CHIP 1.0K
R132	1-216-821-11	s	RES, CHIP 1.0K
R133	1-216-821-11	s	RES, CHIP 1.0K
R134	1-216-821-11	s	RES, CHIP 1.0K
R135	1-216-821-11	s	RES, CHIP 1.0K
R136	1-216-821-11	s	RES, CHIP 1.0K
R137	1-216-821-11	s	RES, CHIP 1.0K
R138	1-216-821-11	s	RES, CHIP 1.0K
R139	1-220-258-11	s	RES, SQUARE TYPE CHIP 100 (3225)
R140	1-220-258-11	s	RES, SQUARE TYPE CHIP 100 (3225)
R141	1-220-258-11	s	RES, SQUARE TYPE CHIP 100 (3225)
R142	1-220-258-11	s	RES, SQUARE TYPE CHIP 100 (3225)
R143	1-220-258-11	s	RES, SQUARE TYPE CHIP 100 (3225)
R144	1-220-258-11	s	RES, SQUARE TYPE CHIP 100 (3225)
R145	1-220-255-11	s	RES, SQUARE TYPE CHIP 68 (3225)
R146	1-220-259-11	s	RES, SQUARE TYPE CHIP 150 (3225)
R147	1-220-259-11	s	RES, SQUARE TYPE CHIP 150 (3225)
R148	1-218-927-11	s	RES, SQUARE TYPE CHIP 560 (3225)
R149	1-218-927-11	s	RES, SQUARE TYPE CHIP 560 (3225)
R150	1-218-927-11	s	RES, SQUARE TYPE CHIP 560 (3225)
R151	1-218-927-11	s	RES, SQUARE TYPE CHIP 560 (3225)
R152	1-218-927-11	s	RES, SQUARE TYPE CHIP 560 (3225)
R153	1-218-927-11	s	RES, SQUARE TYPE CHIP 560 (3225)
R154	1-218-780-11	s	RES, SQUARE TYPE CHIP 270 (3225)
R155	1-218-780-11	s	RES, SQUARE TYPE CHIP 270 (3225)
R156	1-218-780-11	s	RES, SQUARE TYPE CHIP 270 (3225)
R157	1-216-819-11	s	RES, CHIP 680
R158	1-216-819-11	s	RES, CHIP 680
R159	1-216-819-11	s	RES, CHIP 680
R160	1-239-436-11	s	NETWORK RESISTOR (CHIP) 33K
R161	1-239-436-11	s	NETWORK RESISTOR (CHIP) 33K
R162	1-239-436-11	s	NETWORK RESISTOR (CHIP) 33K
R163	1-239-436-11	s	NETWORK RESISTOR (CHIP) 33K
R164	1-216-819-11	s	RES, CHIP 680
R165	1-239-412-11	s	NETWORK RESISTOR (CHIP) 100
R166	1-216-834-11	s	RES, CHIP 12K
R171	1-216-819-11	s	RES, CHIP 680
R172	1-216-809-11	s	RES, CHIP 100
R180	1-216-845-11	s	RES, CHIP 100K
R182	1-236-908-11	s	NETWORK RESISTOR (CHIP) 10K

(VFD ASSEMBLY)

Ref. No. or Q'ty	Part No.	SP	Description
R183	1-236-908-11	s	NETWORK RESISTOR (CHIP) 10K
R184	1-236-908-11	s	NETWORK RESISTOR (CHIP) 10K
R185	1-218-927-11	s	RES, SQUARE TYPE CHIP 560 (3225)
R210	1-216-803-11	s	RES, CHIP 33
R211	1-216-803-11	s	RES, CHIP 33
R212	1-216-803-11	s	RES, CHIP 33
R213	1-216-803-11	s	RES, CHIP 33
R214	1-216-803-11	s	RES, CHIP 33
R215	1-216-331-11	s	RES, CHIP 9.1K
R216	1-216-849-11	s	RES, CHIP 220K
R217	1-216-849-11	s	RES, CHIP 220K
R218	1-216-849-11	s	RES, CHIP 220K
R219	1-216-849-11	s	RES, CHIP 220K
SW1	1-572-725-11	s	SWITCH, TACTILE
SW2	1-572-725-11	s	SWITCH, TACTILE
SW3	1-572-725-11	s	SWITCH, TACTILE
SW4	1-572-725-11	s	SWITCH, TACTILE
SW5	1-572-725-11	s	SWITCH, TACTILE
SW6	1-572-725-11	s	SWITCH, TACTILE
SW7	1-572-725-11	s	SWITCH, TACTILE
SW8	1-771-257-11	s	SWITCH, TACTILE (ILLUMINATED)
SW9	1-771-258-11	s	SWITCH, TACTILE (ILLUMINATED)
SW10	1-771-259-31	s	SWITCH, TACTILE (ILLUMINATED)
SW11	1-771-260-11	s	SWITCH, TACTILE (ILLUMINATED)
SW12	1-771-257-21	s	SWITCH, TACTILE (ILLUMINATED)
SW13	1-771-257-21	s	SWITCH, TACTILE (ILLUMINATED)
SW14	1 771 257 11	s	SWITCH, TACTILE (ILLUMINATED)
SW15	1-771-257-11	s	SWITCH, TACTILE (ILLUMINATED)
SW16	1-771-801-11	s	SWITCH, TACTILE (ILLUMINATED)
SW17	1-570-865-11	s	SWITCH, SLIDE
SW18	1-570-865-11	s	SWITCH, SLIDE
T1	9-884-657-01	s	TRANSFORMER
U1	9-885-000-16	s	IC MBCG46183-127
U3	8-759-322-72	s	IC HM6264ALFP-10
U21	8-759-524-05	s	IC TC74VHC126FT (EL)
U23	8-759-165-37	s	IC X24164SIC7000
U24	8-759-058-45	s	IC NJM3403AV
U25	8-759-058-45	s	IC NJM3403AV
U26	8-759-196-96	s	IC TC7SH08FU (TE85R)
U27	8-759-259-18	s	IC MB3793-42PNF
U28	8-759-184-64	s	IC TC4W66FU
U29	8-759-183-51	s	IC TL431CPK
U30	8-759-480-10	s	IC HD64F3048F16
U31	8-759-249-93	s	IC LC75821W
VR1	1-225-566-11	s	RES, VAR, CARBON 50K
VR2	1-226-416-11	s	RES, VAR, CARBON 10K
VR3	1-225-566-11	s	RES, VAR, CARBON 50K
VR4	1-226-416-11	s	RES, VAR, CARBON 10K
VR5	1-225-566-11	s	RES, VAR, CARBON 50K
VR6	1-225-566-11	s	RES, VAR, CARBON 50K
VR7	1-226-416-11	s	RES, VAR, CARBON 10K
VR8	1-226-416-11	s	RES, VAR, CARBON 10K
X1	9-884-656-01	s	VIBRATOR, CRYSTAL 7.9MHz
X2	1-760-465-11	s	VIBRATOR, CRYSTAL 16MHz
ZD1	8-719-046-60	s	DIODE HZK6C
ZD2	8-719-058-61	s	DIODE HZM11NB3TL
ZD3	8-719-072-02	s	DIODE HZK9CLTR

VPR-34 BOARD

Ref. No. or Q'ty	Part No.	SP	Description
1pc	A-8316-698-A	o	MOUNTED CIRCUIT BOARD, VPR-34
2pcs	3-603-737-01	o	LEVER,BOARD
5pcs	3-729-061-01	s	SCREW (M2X4.5) (TYPE 1)(STEEL)
C100	1-107-826-11	s	CAPACITOR,CHIP CERAMIC 0.1MF
C101	1-107-826-11	s	CAPACITOR,CHIP CERAMIC 0.1MF
C102	1-107-826-11	s	CAPACITOR,CHIP CERAMIC 0.1MF
C103	1-107-826-11	s	CAPACITOR,CHIP CERAMIC 0.1MF
C104	1-107-826-11	s	CAPACITOR,CHIP CERAMIC 0.1MF
C105	1-107-826-11	s	CAPACITOR,CHIP CERAMIC 0.1MF
C106	1-107-826-11	s	CAPACITOR,CHIP CERAMIC 0.1MF
C107	1-107-826-11	s	CAPACITOR,CHIP CERAMIC 0.1MF
C108	1-107-826-11	s	CAPACITOR,CHIP CERAMIC 0.1MF
C109	1-107-826-11	s	CAPACITOR,CHIP CERAMIC 0.1MF
C110	1-107-826-11	s	CAPACITOR,CHIP CERAMIC 0.1MF
C111	1-107-826-11	s	CAPACITOR,CHIP CERAMIC 0.1MF
C112	1-107-826-11	s	CAPACITOR,CHIP CERAMIC 0.1MF
C113	1-107-826-11	s	CAPACITOR,CHIP CERAMIC 0.1MF
C114	1-107-826-11	s	CAPACITOR,CHIP CERAMIC 0.1MF
C115	1-107-826-11	s	CAPACITOR,CHIP CERAMIC 0.1MF
C116	1-107-826-11	s	CAPACITOR,CHIP CERAMIC 0.1MF
C117	1-107-826-11	s	CAPACITOR,CHIP CERAMIC 0.1MF
C200	1-107-826-11	s	CAPACITOR,CHIP CERAMIC 0.1MF
C201	1-107-826-11	s	CAPACITOR,CHIP CERAMIC 0.1MF
C202	1-107-826-11	s	CAPACITOR,CHIP CERAMIC 0.1MF
C203	1-107-826-11	s	CAPACITOR,CHIP CERAMIC 0.1MF
C204	1-107-826-11	s	CAPACITOR,CHIP CERAMIC 0.1MF
C205	1 107 826 11	s	CAPACITOR,CHIP CERAMIC 0.1MF
C206	1-107-826-11	s	CAPACITOR,CHIP CERAMIC 0.1MF
C207	1-107-826-11	s	CAPACITOR,CHIP CERAMIC 0.1MF
C208	1-107-826-11	s	CAPACITOR,CHIP CERAMIC 0.1MF
C209	1-162-923-11	s	CAPACITOR,CERAMIC 47PF/50V CH
C210	1-104-915-11	s	CAPACITOR,CHIP 2.2MF/20V
C211	1-107-826-11	s	CAPACITOR,CHIP CERAMIC 0.1MF
C212	1-162-927-11	s	CAPACITOR,CERAMIC 100PF/50V CH
C213	1-107-826-11	s	CAPACITOR,CHIP CERAMIC 0.1MF
C214	1-107-826-11	s	CAPACITOR,CHIP CERAMIC 0.1MF
C215	1-107-826-11	s	CAPACITOR,CHIP CERAMIC 0.1MF
C216	1-115-169-11	s	CAPACITOR,TANTAL (SMD) 10MF
C217	1-162-923-11	s	CAPACITOR,CERAMIC 47PF/50V CH
C218	1-115-169-11	s	CAPACITOR,TANTAL (SMD) 10MF
C219	1-107-826-11	s	CAPACITOR,CHIP CERAMIC 0.1MF
C220	1-107-826-11	s	CAPACITOR,CHIP CERAMIC 0.1MF
C221	1-107-854-11	s	CAPACITOR TANTALUM 68MF/6.3V
C222	1-107-826-11	s	CAPACITOR,CHIP CERAMIC 0.1MF
C223	1-107-854-11	s	CAPACITOR TANTALUM 68MF/6.3V
C224	1-115-169-11	s	CAPACITOR,TANTAL (SMD) 10MF
C225	1-115-169-11	s	CAPACITOR,TANTAL (SMD) 10MF
C226	1-107-826-11	s	CAPACITOR,CHIP CERAMIC 0.1MF
C227	1-107-826-11	s	CAPACITOR,CHIP CERAMIC 0.1MF
C228	1-107-826-11	s	CAPACITOR,CHIP CERAMIC 0.1MF
C229	1-107-826-11	s	CAPACITOR,CHIP CERAMIC 0.1MF
C230	1-107-826-11	s	CAPACITOR,CHIP CERAMIC 0.1MF
C231	1-107-826-11	s	CAPACITOR,CHIP CERAMIC 0.1MF
C232	1-107-826-11	s	CAPACITOR,CHIP CERAMIC 0.1MF
C233	1-115-170-11	s	CAPACITOR,TANTAL(SMD)4.7MF/10V
C234	1-107-826-11	s	CAPACITOR,CHIP CERAMIC 0.1MF
C235	1-115-170-11	s	CAPACITOR,TANTAL(SMD)4.7MF/10V
C236	1-107-826-11	s	CAPACITOR,CHIP CERAMIC 0.1MF

(VPR-34 BOARD)

Ref. No. or Q'ty	Part No.	SP	Description
C300	1-115-169-11	s	CAPACITOR,TANTAL (SMD) 10MF
C301	1-107-826-11	s	CAPACITOR,CHIP CERAMIC 0.1MF
C302	1-107-826-11	s	CAPACITOR,CHIP CERAMIC 0.1MF
C303	1-107-826-11	s	CAPACITOR,CHIP CERAMIC 0.1MF
C304	1-107-826-11	s	CAPACITOR,CHIP CERAMIC 0.1MF
C305	1-117-373-11	s	CAPACITOR, (SMD) 150MF/6.3V
C306	1-107-826-11	s	CAPACITOR,CHIP CERAMIC 0.1MF
C307	1-107-826-11	s	CAPACITOR,CHIP CERAMIC 0.1MF
C308	1-107-826-11	s	CAPACITOR,CHIP CERAMIC 0.1MF
C309	1-107-826-11	s	CAPACITOR,CHIP CERAMIC 0.1MF
C310	1-107-826-11	s	CAPACITOR,CHIP CERAMIC 0.1MF
C311	1-107-826-11	s	CAPACITOR,CHIP CERAMIC 0.1MF
C312	1-107-826-11	s	CAPACITOR,CHIP CERAMIC 0.1MF
C313	1-107-826-11	s	CAPACITOR,CHIP CERAMIC 0.1MF
C314	1-107-826-11	s	CAPACITOR,CHIP CERAMIC 0.1MF
C315	1-162-927-11	s	CAPACITOR,CERAMIC 100PF/50V CH
C316	1-115-169-11	s	CAPACITOR,TANTAL (SMD) 10MF
C317	1-107-826-11	s	CAPACITOR,CHIP CERAMIC 0.1MF
C318	1-162-958-11	s	CAPACITOR,CERAMIC 270PF/50V SL
C319	1-117-373-11	s	CAPACITOR, (SMD) 150MF/6.3V
C320	1-107-826-11	s	CAPACITOR,CHIP CERAMIC 0.1MF
C321	1-162-927-11	s	CAPACITOR,CERAMIC 100PF/50V CH
C322	1-107-826-11	s	CAPACITOR,CHIP CERAMIC 0.1MF
C323	1-162-914-11	s	CAPACITOR,CERAMIC 9PF/50V 1608
C324	1-163-145-00	s	CAPACITOR,CHIP CERAMIC 1500PF
C325	1-163-257-11	s	CAPACITOR CERAMIC 180PF/50V
C326	1 107 686 11	s	CAPACITOR,CHIP ELECT 4.7MF/16V
C327	1-162-908-11	s	CAPACITOR,CERAMIC 3PF/50V 1608
C328	1-107-686-11	s	CAPACITOR,CHIP ELECT 4.7MF/16V
C329	1-135-177-21	s	CAPACITOR TANTALUM 1MF/25V
C330	1-107-826-11	s	CAPACITOR,CHIP CERAMIC 0.1MF
C331	1-162-910-11	s	CAPACITOR,CERAMIC 5PF/50V 1608
C332	1-107-826-11	s	CAPACITOR,CHIP CERAMIC 0.1MF
C333	1-162-923-11	s	CAPACITOR,CERAMIC 47PF/50V CH
C334	1-107-826-11	s	CAPACITOR,CHIP CERAMIC 0.1MF
C335	1-107-826-11	s	CAPACITOR,CHIP CERAMIC 0.1MF
C336	1-162-915-11	s	CAPACITOR,CERAMIC 10PF/50V CH
C337	1-162-916-11	s	CAPACITOR,CERAMIC 12PF/50V CH
C338	1-162-917-11	s	CAPACITOR,CERAMIC 15PF/50V CH
C339	1-107-826-11	s	CAPACITOR,CHIP CERAMIC 0.1MF
C340	1-107-826-11	s	CAPACITOR,CHIP CERAMIC 0.1MF
C341	1-117-229-11	s	CAPACITOR, (SMD) 10MF/10V
C342	1-104-823-11	s	CAPACITOR,CHIP TANTAL 47MF/16V
C343	1-104-823-11	s	CAPACITOR,CHIP TANTAL 47MF/16V
C344	1-107-826-11	s	CAPACITOR,CHIP CERAMIC 0.1MF
C400	1-117-229-11	s	CAPACITOR, (SMD) 10MF/10V
C401	1-117-229-11	s	CAPACITOR, (SMD) 10MF/10V
C402	1-117-229-11	s	CAPACITOR, (SMD) 10MF/10V
C403	1-117-229-11	s	CAPACITOR, (SMD) 10MF/10V
C404	1-117-229-11	s	CAPACITOR, (SMD) 10MF/10V
C407	1-115-169-11	s	CAPACITOR,TANTAL (SMD) 10MF
C408	1-107-826-11	s	CAPACITOR,CHIP CERAMIC 0.1MF
C409	1-107-826-11	s	CAPACITOR,CHIP CERAMIC 0.1MF
C410	1-107-826-11	s	CAPACITOR,CHIP CERAMIC 0.1MF
C411	1-107-826-11	s	CAPACITOR,CHIP CERAMIC 0.1MF
C417	1-107-826-11	s	CAPACITOR,CHIP CERAMIC 0.1MF
C418	1-107-826-11	s	CAPACITOR,CHIP CERAMIC 0.1MF
C419	1-107-826-11	s	CAPACITOR,CHIP CERAMIC 0.1MF
C420	1-107-826-11	s	CAPACITOR,CHIP CERAMIC 0.1MF

(VPR-34 BOARD)

Ref. No. or Q'ty	Part No.	SP	Description
C421	1-107-826-11	s	CAPACITOR,CHIP CERAMIC 0.1MF
C422	1-107-826-11	s	CAPACITOR,CHIP CERAMIC 0.1MF
C423	1-107-826-11	s	CAPACITOR,CHIP CERAMIC 0.1MF
C424	1-162-927-11	s	CAPACITOR,CERAMIC 100PF/50V CH
C425	1-107-826-11	s	CAPACITOR,CHIP CERAMIC 0.1MF
CN42	1-695-453-11	s	CONNECTOR,BOARD TO BOARD 50P
CP200	1-760-263-11	s	OSCILLATOR, CRYSTAL (VCO TYPE)
CP202	1-760-277-11	s	OSCILLATOR, CRYSTAL (VCO TYPE)
D200	8-719-404-35	s	DIODE MA141WK
D300	8-719-023-69	s	DIODE SB007T03Q
FB200	1-543-309-21	s	BEAD,FERRITE
FB201	1-543-309-21	s	BEAD,FERRITE
FB202	1-543-309-21	s	BEAD,FERRITE
FB203	1-543-309-21	s	BEAD,FERRITE
FL300	1-239-721-11	s	FILTER, LOW PASS (6MHZ)
FL400	1-117-193-11	s	CAPACITOR,3 TERMINAL 1.5MF/50V
FL401	1-117-193-11	s	CAPACITOR,3 TERMINAL 1.5MF/50V
IC100	8-759-375-04	s	IC CXD8985AQ
IC101	8-759-524-28	s	IC TC74VHC245FT(EL)
IC102	8-759-524-28	s	IC TC74VHC245FT(EL)
IC103	8-759-524-28	s	IC TC74VHC245FT(EL)
IC104	8-759-524-28	s	IC TC74VHC245FT(EL)
IC105	8-759-524-28	s	IC TC74VHC245FT(EL)
IC106	8-759-524-28	s	IC TC74VHC245FT(EL)
IC107	8 759 524 28	s	IC TC74VHC245FT(EL)
IC108	8-759-524-28	s	IC TC74VHC245FT(EL)
IC109	8-759-524-28	s	IC TC74VHC245FT(EL)
IC110	8-759-557-59	s	IC UPD4516821AG5-A10B-9NF
IC111	8-759-557-59	s	IC UPD4516821AG5-A10B-9NF
IC112	8-759-557-59	s	IC UPD4516821AG5-A10B-9NF
IC113	8-759-557-59	s	IC UPD4516821AG5-A10B-9NF
IC114	8-759-557-59	s	IC UPD4516821AG5-A10B-9NF
IC115	8-759-557-59	s	IC UPD4516821AG5-A10B-9NF
IC116	8-759-557-59	s	IC UPD4516821AG5-A10B-9NF
IC117	8-759-557-59	s	IC UPD4516821AG5-A10B-9NF
IC118	8-759-557-59	s	IC UPD4516821AG5-A10B-9NF
IC119	8-759-557-59	s	IC UPD4516821AG5-A10B-9NF
IC120	8-759-557-59	s	IC UPD4516821AG5-A10B-9NF
IC121	8-759-557-59	s	IC UPD4516821AG5-A10B-9NF
IC122	8-759-271-86	s	IC TC7SH04FU
IC123	8-759-271-86	s	IC TC7SH04FU
IC124	8-759-271-86	s	IC TC7SH04FU
IC200	8-759-247-03	s	IC CXD8810BQ
IC201	8-759-271-86	s	IC TC7SH04FU
IC202	8-759-083-94	s	IC TC7W74FU
IC203	8-759-454-75	s	IC CXD9008Q
IC204	8-759-907-81	s	IC SN74LS221N(S)
IC205	8-759-389-68	s	IC 74VHCT04MTCX
IC206	8-759-524-10	s	IC TC74VHC157FT (EL)
IC207	8-759-295-09	s	IC TLC2932IPW
IC208	8-759-082-55	s	IC TC7W00FU
IC209	8-759-234-77	s	IC TC4S66F
IC210	8-759-485-82	s	IC MC34182DR2
IC211	8-729-047-61	s	TRANSISTOR SI4925DY-T1
IC212	8-759-389-31	s	IC 74LCX125MTCX
IC213	8-759-524-52	s	IC TC74VHC574FT(EL)
IC214	8-759-524-52	s	IC TC74VHC574FT(EL)

(VPR-34 BOARD)

Ref. No. or Q'ty	Part No.	SP	Description
IC215	8-759-477-86	s	IC UPD485506G5-25-7JF (E2)
IC300	8-759-710-88	s	IC NJM431U
IC301	8-752-357-62	s	IC CXD2307R
IC302	8-759-485-82	s	IC MC34182DR2
IC303	8-759-271-04	s	IC LT1252CS8
IC304	8-759-082-61	s	IC TC4W53FU
IC305	8-759-082-58	s	IC TC7W08FU
IC306	8-752-061-02	s	IC CXA1450M
IC307	8-759-392-64	s	IC AD828AR
IC400	8-759-386-25	s	IC 74LCX245MTCX
IC401	8-759-524-50	s	IC TC74VHC541FT(EL)
IC402	8-759-524-28	s	IC TC74VHC245FT(EL)
IC403	8-759-524-50	s	IC TC74VHC541FT(EL)
IC404	8-759-524-50	s	IC TC74VHC541FT(EL)
IC405	8-759-277-63	s	IC TC7W14FU (TE12R)
IC406	8-759-491-46	s	IC TC74VHCT04AFT (EL)
IC407	8-759-391-30	s	IC 74LVX3245QSCX
IC408	8-759-391-30	s	IC 74LVX3245QSCX
IC409	8-759-389-68	s	IC 74VHCT04MTCX
IC410	8-759-154-60	s	IC UPD71055GB-10-3B4
IC411	8-759-082-55	s	IC TC7W00FU
IC412	8-759-058-62	s	IC TC7S08FU-TE85R
L200	1-410-393-11	s	CHIP INDUCTOR 100UH (3225)
L300	1-410-737-31	s	CHIP INDUCTOR 0.47UH (3225)
L301	1-410-381-11	s	CHIP INDUCTOR 10UH (3225)
L302	1-410-381-11	s	CHIP INDUCTOR 10UH (3225)
L303	1 412 166 11	s	MICRO INDUCTOR 0.18UH
L304	1-412-143-11	s	INDUCTOR,MICRO 39UH
L305	1-410-387-11	s	CHIP INDUCTOR 33UH (3225)
L401	1-410-381-11	s	CHIP INDUCTOR 10UH (3225)
L402	1-409-647-11	s	COIL, CHOKE 22UH
Q200	8-729-029-14	s	TRANSISTOR DTC144EUA-T106
Q201	8-729-029-14	s	TRANSISTOR DTC144EUA-T106
Q300	8-729-106-68	s	TRANSISTOR 2SD1615A-GP
Q301	8-729-140-63	s	TRANSISTOR 2SA1611-M5M6
Q302	8-729-117-32	s	TRANSISTOR 2SC4177
Q303	8-729-117-32	s	TRANSISTOR 2SC4177
R101	1-218-668-11	s	RESISTOR,CHIP 100 1/16W (1608)
R102	1-218-740-11	s	RESISTOR,CHIP 100K 1/16W(1608)
R103	1-218-668-11	s	RESISTOR,CHIP 100 1/16W (1608)
R104	1-218-668-11	s	RESISTOR,CHIP 100 1/16W (1608)
R105	1-218-668-11	s	RESISTOR,CHIP 100 1/16W (1608)
R106	1-218-668-11	s	RESISTOR,CHIP 100 1/16W (1608)
R107	1-218-668-11	s	RESISTOR,CHIP 100 1/16W (1608)
R108	1-218-668-11	s	RESISTOR,CHIP 100 1/16W (1608)
R109	1-218-668-11	s	RESISTOR,CHIP 100 1/16W (1608)
R110	1-218-668-11	s	RESISTOR,CHIP 100 1/16W (1608)
R111	1-218-668-11	s	RESISTOR,CHIP 100 1/16W (1608)
R112	1-218-668-11	s	RESISTOR,CHIP 100 1/16W (1608)
R113	1-218-668-11	s	RESISTOR,CHIP 100 1/16W (1608)
R114	1-218-668-11	s	RESISTOR,CHIP 100 1/16W (1608)
R115	1-218-668-11	s	RESISTOR,CHIP 100 1/16W (1608)
R116	1-218-668-11	s	RESISTOR,CHIP 100 1/16W (1608)
R117	1-218-668-11	s	RESISTOR,CHIP 100 1/16W (1608)
R121	1-216-864-11	s	RESISTOR,CHIP 0 1/16W (1608)
R122	1-216-864-11	s	RESISTOR,CHIP 0 1/16W (1608)
R123	1-216-864-11	s	RESISTOR,CHIP 0 1/16W (1608)

(VPR-34 BOARD)

Ref. No. or Q'ty	Part No.	SP	Description
R200	1-218-668-11	s	RESISTOR,CHIP 100 1/16W (1608)
R201	1-216-864-11	s	RESISTOR,CHIP 0 1/16W (1608)
R202	1-218-668-11	s	RESISTOR,CHIP 100 1/16W (1608)
R203	1-218-668-11	s	RESISTOR,CHIP 100 1/16W (1608)
R204	1-216-864-11	s	RESISTOR,CHIP 0 1/16W (1608)
R205	1-216-864-11	s	RESISTOR,CHIP 0 1/16W (1608)
R208	1-218-716-11	s	RESISTOR,CHIP 10K 1/16W(1608)
R209	1-216-864-11	s	RESISTOR,CHIP 0 1/16W (1608)
R211	1-218-726-11	s	RESISTOR CHIP 27K 1/16W (1608)
R212	1-218-692-11	s	RESISTOR,CHIP 1.0K 1/16W(1608)
R213	1-218-716-11	s	RESISTOR,CHIP 10K 1/16W(1608)
R214	1-218-716-11	s	RESISTOR,CHIP 10K 1/16W(1608)
R215	1-216-857-11	s	RESISTOR,CHIP 1.0M 1/16W 1608
R216	1-218-720-11	s	RESISTOR,CHIP 15K 1/16W(1608)
R217	1-218-668-11	s	RESISTOR,CHIP 100 1/16W (1608)
R219	1-218-692-11	s	RESISTOR,CHIP 1.0K 1/16W(1608)
R220	1-218-732-11	s	RESISTOR,CHIP 47K 1/16W(1608)
R221	1-218-732-11	s	RESISTOR,CHIP 47K 1/16W(1608)
R222	1-218-708-11	s	RESISTOR,CHIP 4.7K 1/16W(1608)
R223	1-218-732-11	s	RESISTOR,CHIP 47K 1/16W(1608)
R224	1-218-716-11	s	RESISTOR,CHIP 10K 1/16W(1608)
R225	1-216-857-11	s	RESISTOR, CHIP 1.0M 1/16W 1608
R226	1-218-732-11	s	RESISTOR,CHIP 47K 1/16W(1608)
R227	1-218-694-11	s	RESISTOR CHIP 1.2K1/16W(1608)
R228	1-218-692-11	s	RESISTOR,CHIP 1.0K 1/16W(1608)
R229	1-218-668-11	s	RESISTOR,CHIP 100 1/16W (1608)
R230	1 218 692 11	s	RESISTOR,CHIP 1.0K 1/16W(1608)
R231	1-218-668-11	s	RESISTOR,CHIP 100 1/16W (1608)
R232	1-218-668-11	s	RESISTOR,CHIP 100 1/16W (1608)
R233	1-216-864-11	s	RESISTOR,CHIP 0 1/16W (1608)
R234	1-218-668-11	s	RESISTOR,CHIP 100 1/16W (1608)
R235	1-218-652-11	s	RESISTOR,CHIP 22 1/16W (1608)
R236	1-218-668-11	s	RESISTOR,CHIP 100 1/16W (1608)
R237	1-218-668-11	s	RESISTOR,CHIP 100 1/16W (1608)
R238	1-218-644-11	s	RESISTOR,METAL 10 1/16W
R239	1-218-660-91	s	RESISTOR CHIP 47 1/16W (1608)
R240	1-218-660-91	s	RESISTOR CHIP 47 1/16W (1608)
R241	1-218-660-91	s	RESISTOR CHIP 47 1/16W (1608)
R242	1-218-652-11	s	RESISTOR,CHIP 22 1/16W (1608)
R243	1-218-660-91	s	RESISTOR CHIP 47 1/16W (1608)
R244	1-218-668-11	s	RESISTOR,CHIP 100 1/16W (1608)
R245	1-218-668-11	s	RESISTOR,CHIP 100 1/16W (1608)
R300	1-218-686-11	s	RESISTOR CHIP 560 1/16W (1608)
R301	1-218-706-11	s	RESISTOR,CHIP 3.9K 1/16W(1608)
R302	1-218-694-11	s	RESISTOR CHIP 1.2K1/16W(1608)
R303	1-218-730-11	s	RESISTOR METAL FILM CHIP 39K
R305	1-218-708-11	s	RESISTOR,CHIP 4.7K 1/16W(1608)
R306	1-218-708-11	s	RESISTOR,CHIP 4.7K 1/16W(1608)
R308	1-216-864-11	s	RESISTOR,CHIP 0 1/16W (1608)
R309	1-218-718-11	s	RESISTOR CHIP 12K 1/16W (1608)
R310	1-218-728-11	s	RESISTOR,METAL 33K 1/16W
R311	1-218-668-11	s	RESISTOR,CHIP 100 1/16W (1608)
R312	1-218-668-11	s	RESISTOR,CHIP 100 1/16W (1608)
R313	1-218-704-11	s	RESISTOR,CHIP 3.3K 1/16W(1608)
R314	1-218-668-11	s	RESISTOR,CHIP 100 1/16W (1608)
R315	1-218-704-11	s	RESISTOR,CHIP 3.3K 1/16W(1608)
R316	1-218-704-11	s	RESISTOR,CHIP 3.3K 1/16W(1608)
R317	1-218-676-11	s	RESISTOR,CHIP 220 1/16W(1608)
R318	1-218-692-11	s	RESISTOR,CHIP 1.0K 1/16W(1608)

(VPR-34 BOARD)

Ref. No. or Q'ty	Part No.	SP	Description
R319	1-218-672-11	s	RESISTOR,CHIP 150 1/16W(1608)
R320	1-218-716-11	s	RESISTOR,CHIP 10K 1/16W(1608)
R321	1-218-720-11	s	RESISTOR,CHIP 15K 1/16W(1608)
R322	1-218-716-11	s	RESISTOR,CHIP 10K 1/16W(1608)
R323	1-218-676-11	s	RESISTOR,CHIP 220 1/16W(1608)
R324	1-218-708-11	s	RESISTOR,CHIP 4.7K 1/16W(1608)
R325	1-218-672-11	s	RESISTOR,CHIP 150 1/16W(1608)
R326	1-218-650-11	s	RESISTOR,CHIP 18 1/16W (1608)
R327	1-218-666-11	s	RESISTOR CHIP 82 1/16W (1608)
R328	1-218-672-11	s	RESISTOR,CHIP 150 1/16W(1608)
R329	1-218-697-11	s	RESISTOR,CHIP 1.6K 1/16W(1608)
R330	1-218-672-11	s	RESISTOR,CHIP 150 1/16W(1608)
R331	1-218-708-11	s	RESISTOR,CHIP 4.7K 1/16W(1608)
R332	1-216-863-11	s	RESISTOR,CHIP 3.3M 1/16W 1608
R333	1-218-730-11	s	RESISTOR METAL FILM CHIP 39K
R334	1-218-701-11	s	RESISTOR,CHIP 2.4K 1/16W(1608)
R335	1-218-712-11	s	RESISTOR,METAL 6.8K 1/16W
R336	1-218-694-11	s	RESISTOR CHIP 1.2K1/16W(1608)
R337	1-218-692-11	s	RESISTOR,CHIP 1.0K 1/16W(1608)
R338	1-218-692-11	s	RESISTOR,CHIP 1.0K 1/16W(1608)
R339	1-218-694-11	s	RESISTOR CHIP 1.2K1/16W(1608)
R340	1-218-660-91	s	RESISTOR CHIP 47 1/16W (1608)
R341	1-218-704-11	s	RESISTOR,CHIP 3.3K 1/16W(1608)
R342	1-218-684-11	s	RESISTOR CHIP 470 1/16W (1608)
R343	1-218-692-11	s	RESISTOR,CHIP 1.0K 1/16W(1608)
R344	1-218-702-11	s	RESISTOR CHIP 2.7K 1/16W(1608)
R345	1 218 692 11	s	RESISTOR,CHIP 1.0K 1/16W(1608)
R346	1-218-704-11	s	RESISTOR,CHIP 3.3K 1/16W(1608)
R347	1-218-684-11	s	RESISTOR CHIP 470 1/16W (1608)
R348	1-218-700-11	s	RESISTOR,CHIP 2.2K 1/16W(1608)
R349	1-218-692-11	s	RESISTOR,CHIP 1.0K 1/16W(1608)
R350	1-218-652-11	s	RESISTOR,CHIP 22 1/16W (1608)
R351	1-218-652-11	s	RESISTOR,CHIP 22 1/16W (1608)
R352	1-218-664-11	s	RESISTOR,CHIP 68 1/16W (1608)
R353	1-218-664-11	s	RESISTOR,CHIP 68 1/16W (1608)
R354	1-218-668-11	s	RESISTOR,CHIP 100 1/16W (1608)
R355	1-218-740-11	s	RESISTOR,CHIP 100K 1/16W(1608)
R356	1-218-740-11	s	RESISTOR,CHIP 100K 1/16W(1608)
R357	1-216-864-11	s	RESISTOR,CHIP 0 1/16W (1608)
R359	1-218-684-11	s	RESISTOR CHIP 470 1/16W (1608)
R400	1-218-716-11	s	RESISTOR,CHIP 10K 1/16W(1608)
R401	1-218-668-11	s	RESISTOR,CHIP 100 1/16W (1608)
R402	1-216-864-11	s	RESISTOR,CHIP 0 1/16W (1608)
R403	1-218-740-11	s	RESISTOR,CHIP 100K 1/16W(1608)
R404	1-218-668-11	s	RESISTOR,CHIP 100 1/16W (1608)
R405	1-218-644-11	s	RESISTOR,METAL 10 1/16W
R410	1-218-668-11	s	RESISTOR,CHIP 100 1/16W (1608)
R411	1-218-668-11	s	RESISTOR,CHIP 100 1/16W (1608)
R412	1-218-668-11	s	RESISTOR,CHIP 100 1/16W (1608)
R413	1-216-864-11	s	RESISTOR,CHIP 0 1/16W (1608)
R414	1-216-864-11	s	RESISTOR,CHIP 0 1/16W (1608)
R415	1-216-864-11	s	RESISTOR,CHIP 0 1/16W (1608)
R416	1-216-864-11	s	RESISTOR,CHIP 0 1/16W (1608)
R417	1-216-864-11	s	RESISTOR,CHIP 0 1/16W (1608)
RB100	1-239-309-11	s	RESISTOR ARRAY,CHIP 100K
RB101	1-236-907-11	s	RESISTOR BLOCK 100K (1608)
RB102	1-236-907-11	s	RESISTOR BLOCK 100K (1608)
RB103	1-239-711-11	s	NETWORK, RESISTOR 0 (1608)
RB104	1-239-711-11	s	NETWORK, RESISTOR 0 (1608)

(VPR-34 BOARD)

Ref. No. or Q'ty	Part No.	SP	Description
RB105	1-239-711-11	s	NETWORK, RESISTOR 0 (1608)
RB200	1-239-409-11	s	RESISTOR NETWORK 47 (1608)
RB201	1-239-955-11	s	RESISTOR,NETWORK
RB202	1-239-955-11	s	RESISTOR,NETWORK
RB203	1-239-955-11	s	RESISTOR,NETWORK
RB204	1-239-955-11	s	RESISTOR,NETWORK
RB205	1-239-711-11	s	NETWORK, RESISTOR 0 (1608)
RB206	1-239-711-11	s	NETWORK, RESISTOR 0 (1608)
RB207	1-239-711-11	s	NETWORK, RESISTOR 0 (1608)
RB208	1-239-711-11	s	NETWORK, RESISTOR 0 (1608)
RB209	1-239-711-11	s	NETWORK, RESISTOR 0 (1608)
RB210	1-239-711-11	s	NETWORK, RESISTOR 0 (1608)
RB211	1-239-711-11	s	NETWORK, RESISTOR 0 (1608)
RB212	1-239-711-11	s	NETWORK, RESISTOR 0 (1608)
RB213	1-239-711-11	s	NETWORK, RESISTOR 0 (1608)
RB214	1-239-711-11	s	NETWORK, RESISTOR 0 (1608)
RB400	1-239-309-11	s	RESISTOR ARRAY,CHIP 100K
RB401	1-239-309-11	s	RESISTOR ARRAY,CHIP 100K
RB402	1-239-309-11	s	RESISTOR ARRAY,CHIP 100K
RB403	1-236-908-11	s	RESISTOR,NETWORK 10K (3216)
RB404	1-239-309-11	s	RESISTOR ARRAY,CHIP 100K
RB405	1-239-309-11	s	RESISTOR ARRAY,CHIP 100K
RB406	1-239-309-11	s	RESISTOR ARRAY,CHIP 100K
RB407	1-239-309-11	s	RESISTOR ARRAY,CHIP 100K
RB408	1-233-936-11	s	NETWORK RESISTOR 10 (1608)
RB409	1-233-936-11	s	NETWORK RESISTOR 10 (1608)
RB410	1 233 936 11	s	NETWORK RESISTOR 10 (1608)
RB411	1-233-936-11	s	NETWORK RESISTOR 10 (1608)
RB412	1-233-936-11	s	NETWORK RESISTOR 10 (1608)

1-4. Supplied Accessories List

Q'ty	Part No.	SP	Description
11pcs	3-604-795-01	s	CAP BNC
2pcs	3-609-573-02	s	CAP,DC OUT
4pcs	3-613-703-01	o	CAP,XLR(F) (for J)
2pcs	3-613-703-01	o	CAP,XLR(F) (for SY)
3pcs	3-613-704-01	o	CAP,XLR(M) (for J)
5pcs	3-613-704-01	o	CAP,XLR(M) (for SY)
1pc	3-673-948-11	o	CAP,DUST

1-5. Fixtures List

Part No.	SP	Description
A-8317-304-A	o	HN-257 MOUNTED CIRCUIT BOARD
A-8319-485-A	s	IC MEMORY CARD BOX, CDS-20 ASSEMBLY
A 8321 000 A	o	EXTENSION BOARD, EX 706
A-8322-838-A	o	CN-1936 MOUNTED CIRCUIT BOARD
J-6035-070-A	o	EXTRUCTION TOOL (for PLCC socket)
J-6080-840-A	s	INSPECTION MIRROR
J-6252-510-A	o	TORQUE SCREWDRIVER (6 kg·cm) (0.6 N·m)
J-6252-520-A	o	TORQUE SCREWDRIVER (12 kg·cm) (1.2 N·m)
J-6325-400-A	o	TORQUE SCREWDRIVER (3 kg·cm)
J-6323-420-A	o	TORQUE SCREWDRIVER'S BIT (+2 mm, l=75 mm)
J-6325-110-A	o	TORQUE SCREWDRIVER'S BIT (l=75 mm)
J-6325-380-A	o	TORQUE SCREWDRIVER'S BIT (l=162 mm)
J-6322-420-A	o	TAPE GUIDE ADJUSTMENT DRIVER (45)
J-6323-530-A	o	STOP WASHER FASTENING TOOL
J-6323-890-A	o	TORQUE CASSETTE (FWD BACK TEN.)
J-6324-150-A	o	REEL TABLE HEIGHT ADJUSTMENT TOOL
J-6326-120-A	o	HEXAGONAL BIT (d=1.5 mm, l=85 mm)
J-6332-240-A	o	VISC PHASE ADJUSTING TOOL (for DNW-A28P only)
J-6530-650-A	o	HEAD TIP PROTRUSION MEASUREMENT GAUGE
J-7032-610-A	o	CASSETTE REFERENCE PLATE
1-772-004-11	o	CARD (4MB), MEMORY
3-184-527-01	s	CLEANING CLOTH (15 cm x 15 cm)
3-649-266-01	s	PARALLEL PIN (d=1.6 mm)
3-703-358-04	o	PARALLEL PIN (d=2.0 mm)
7-432-114-11	s	LOCKING COMPOUND, 1401B (200 g)
7-651-000-10	s	SONY GREASE SGL-601 (50 g)
7-651-000-11	s	SONY GREASE SGL-801 (50 g)
7-651-000-59	o	GREASE PG-662
7 661 018 18	s	DIAMOND OIL NT 68 (50 ml)
7-700-751-01	s	BOX DRIVER (d=4.5 mm)
8-960-075-01	o	ALIGNMENT TAPE, SR5-1 (for 525/60 system)
8-960-075-11	o	ALIGNMENT TAPE, SR2-1 (for 525/60 system)
8-960-075-51	o	ALIGNMENT TAPE, SR5-1P (for 625/50 system)
8-960-075-61	o	ALIGNMENT TAPE, SR2-1P (for 625/50 system)
8-960-096-01	o	ALIGNMENT TAPE, CR2-1B (for analog Betacam, NTSC)
8-960-096-41	o	ALIGNMENT TAPE, CR5-1B (for analog Betacam, NTSC)
8-960-096-51	o	ALIGNMENT TAPE, CR2-1B PS (for analog Betacam, PAL)
8-960-097-44	o	ALIGNMENT TAPE, CR5-2A (OXIDE TAPE) (for analog Betacam, NTSC)
8-960-097-45	o	ALIGNMENT TAPE, CR8-1A (OXIDE TAPE) (for analog Betacam, NTSC)
8-960-096-91	o	ALIGNMENT TAPE, CR5-1B PS (METAL PARTICLE TAPE) (for analog Betacam, PAL)
8-960-096-86	o	ALIGNMENT TAPE, CR8-1B PS (METAL PARTICLE TAPE) (for analog Betacam, PAL)
8-960-098-44	o	ALIGNMENT TAPE, CR5-2A PS (OXIDE TAPE) (for analog Betacam, PAL)
8-960-098-45	o	ALIGNMENT TAPE, CR8-1A PS (OXIDE TAPE) (for analog Betacam, PAL)
9-919-573-01	s	CLEANING LIQUID

Section 2
Semiconductor Pin Assignments

The following describes the semiconductor types used in this unit.
For semiconductors marked with page numbers in the index, refer to the corresponding pages in this section. However, in some cases incompatible types are also listed, therefore, when a part is to be replaced, also refer to the Spare Parts section.
In addition, for semiconductors with ID Nos., refer to the separate CD-ROM titled "Semiconductor Pin Assignments" (Sony Part No. 9-968-546-xx) that allows searching for parts by semiconductor type or ID No.
The semiconductors in the manual or on the CD-ROM are listed by equivalent types. Thus the external view or the index mark indication may differ from the actual type.
Pin assignments and block diagrams are based on the IC manufacturer's data book.

本機に使用されている半導体型名の一覧を下記に示します。
索引中，ページが記載されている半導体は，本章の該当ページを参照してください。ただし，互換性のない型名を併記している場合がありますので，部品を交換するときは，Spare Partsの章を参照してください。
また，ID番号が記載されている半導体は，別途発行の "Semiconductor Pin Assignments" CD-ROM版 (ソニー部品番号：9-968-546-xx)を参照してください。
半導体型名またはID番号から検索ができます。
マニュアルまたはCD-ROMに掲載されている半導体は，それぞれの機能を等価的に表わしたものです。
外観やインデックスマークの表示方法が実物と異なる場合があります。
ピン配置およびブロック図はICメーカーのデータブックに従いました。

DIODE	Page or ID No.
1S2836	DC001-02
1S2836-T1	DC001-02
1S2837-T1	DC001-03
1SS184	DC001-03
1SS187	DC001-05
1SS223	DC001-05
1SS300-TE85L	DC001-02
1SS301-TE85L	DC001-03
1SS302	DC001-01
1SS302-TE85L	DC001-01
1SS306(TE85L)	DC004-01
DA204U	DC001-01
DA204UT106	DC001-01
DAN202U	DC001-03
DAN202UT106	DC001-03
DAP202U	DC001-02
DAP202UT106	DC001-02
EC10QS-04	DC007-01
EC10QS-06	DC007-01
EC10QS-06-TE12L	DC007-01
EC10QS04-TE12L5	DC007-01
EC11FS4-TE12L	DC007-01
EC11FS4-TE12L5	DC007-01
HZK6C	DC006-02
HZK9CLTR	DC006-02
HZM11NB3TL	DC001-04
KV1470	DC001-13
KV1470TL00	DC001-13
MA141WK	DC001-03
MA721WA-TX	DC001-02
MA721WK-(TX)	DC001-03
MA740	2-7
MA740-TX	2-7
MBRS130LT3	DC013-01
RB051L-40TE25	DC007-01
RD10M-B2	DC001-04
RD10M-T1B	DC001-04
RD15M-B1	DC001-04
RD15M-T1B	DC001-04
RD2.0UH-T1	DC008-04
RD2.4M-B	DC001-04
RD2.4M-T1B	DC001-04
RD4.3UH-T1	DC008-04
RD5.6M-B2	DC001-04
RD5.6M-T1B	DC001-04
RD5.6UJN-T1	DC008-04
RD6.8M-T1B	DC001-04
RD8.2M-B	DC001-04
RD8.2M-T1B	DC001-04
SB007-03CP	DC001-06
SB007-03CP-TB	DC001-06
SB007T03Q	DC001-01
SB007T03Q-TL	DC001-01
SB01-05CP	DC001-06
SB01-05CP-TB	DC001-06
SB05-05CP	DC001-16
SB05-05CP-TB	DC001-16
SB05W05C	DC001-03
SB05W05C-TB	DC001-03
SB20-03P	DC002-03
SB20-03P-TD	DC002-03

Index

LED	Page or ID No.
BR5305S	LR010-02
CL-150HR-CD-T	LC001-01
CL-150PG-CD	LC001-01
CL-150PG-CD-T	LC001-01
CL-150R-CD	LC001-01
CL-150R-CD-T	LC001-01
CL-150Y-CD	LC001-01
CL-150Y-CD-T	LC001-01
CL-170G-CD	LC010-01
CL-170G-CD-T	LC010-01
CL-170UR-CD-T	LC010-01
CL-200HR-C-TSL	LC008-01
CL-200HR-C-TUL	LC008-01
CL-200YG-C-TS	LC001-01
GL3UR8	LR002-01
TLGE160	LR018-02
TLSU1002(TPX1,SONY)	LC004-01
TLYE160A	LR018-02

TRANSISTOR	Page or ID No.
2SA1162G	TC001-01
2SA1314C-TE12L	TC002-01
2SA1462	TC001-01
2SA1462-T1Y33Y34	TC001-01
2SA1610-T1Y33	TC001-01
2SA1610-Y33	TC001-01
2SA1611-M5M6	TC001-01
2SA1611T1-M5M6	TC001-01
2SA812-T1-M5M6	TC001-01
2SB1115A-T1YQYP	TC002-01
2SB1115A-YQ	TC002-01
2SB624-BV345	TC001-01
2SB624T1-BV345	TC001-01
2SC1623-L5L6	TC001-02
2SC1623-T1-L5L6	TC001-02
2SC2712	TC001-02
2SC2712-GL-TE85L	TC001-02
2SC2712-YG	TC001-02
2SC2713-G	TC001-02
2SC2713G-TE85L	TC001-02
2SC2881(O,Y)TE12R	TC002-02
2SC2982C-TE12L	TC002-02
2SC3303-Y	TR035-01
2SC3356-K	TC001-02
2SC3356-T1K	TC001-02
2SC3735-L-B35	TC001-02
2SC3735-T1B-B35	TC001-02
2SC4116-YG	TC001-02
2SC4116YG-TE85L	TC001-02
2SC4177-L5	TC001-02
2SC4177-L6	TC001-02
2SC4177-T1L5	TC001-02
2SC4177-T1L5L6	TC001-02
2SC4178-F13F14-T1	TC001-02
2SC4178-F14	TC001-02
2SC4207-YGRTE85L	TC008-11
2SC4213-AB-TE85L	TC001-02
2SD1614-T1XK	TC002-02
2SD1615-T1GLGK	TC002-02
2SD1615A-GP	TC002-02
2SD1615A-T1GQGP	TC002-02
2SD1624-T	TC002-02
2SD1624-T-TD	TC002-02
2SD596DV345	TC001-02
2SD596T1-DV345	TC001-02
2SJ187	TC002-06
2SJ187-TD	TC002-06
2SK2315TY	TC002-08
2SK2315TYTR	TC002-08
2SK711-BL	TC001-05
2SK711-BL/V-TE85L	TC001-05
2SK852-T1X2	TC001-05
2SK852-X2	TC001-05
2SK94-T1X1	TC001-05
2SK94-T1X2X3X4	TC001-05
2SK94-X2X3X4	TC001-05
2SK94-X4	TC001-05
DTA114EUA	TC001-04
DTA114EUA-T106	TC001-04

TRANSISTOR	Page or ID No.
DTA144EKA-T146	TC001-04
DTA144EUA-T106	TC001-04
DTC113ZUA-T106	TC001-03
DTC114EU	TC001-03
DTC114EUA-T106	TC001-03
DTC114TKA-T146	TC001-03
DTC144EKA	TC001-03
DTC144EKA-T146	TC001-03
DTC144EUA-T106	TC001-03
FMS2	TC008-07
FMS2-T-148	TC008-07
FMY3	TC008-05
FMY3-T-148	TC008-05
IMX1	TC005-01
IMX1T110	TC005-01
MTD20N03HDL	TC010-01
MTD20N03HDL-T4	TC010-01
MTD20N06HDLT4	TC010-01
SI4420DY-T1	TC012-06
SI4431DY-T1	TC012-04
SI4435DY-T1-REVA	TC012-04
SI4532DY-T1	TC012-03
SI4953DY-T1	TC012-02
SI6542DQ-T1	TC013-03
SI9433DY-T1	TC012-04
SI9925DY-T1	TC012-01
SI9936DY	TC012-01
SI9936DY-T1	TC012-01

OTHERS	Page or ID No.
GP1S33	MR010-08
GP2S09-C	MA013-01
PR-11-C	MA020-01
PR-11-C-T	MA020-01
THS117	MA016-01
THS117-TE85L	MA016-01

IC	Page or ID No.
74ACT244SJ	TC74HC244P
74ACT244SJX	TC74HC244P
74LCX125MTCX	MC74HC125N
74LCX245MTCX	TC74HC245P
74LCX541MTCX	MC74HC541N
74LCX574MTCX	TC74HC574P
74LVX3245QSCX	74LVX4245QSCX
74VHCT04MTCX	TC74HC04P
74VHCT08MTCX	TC74HC08P
74VHCT574MTCX	TC74HC574P
AD828AR	LM358N
AD828AR-REEL	LM358N
AK4324-VF-E2	AK4324-VF-E2
AK5352-VF-E2	AK5352-VF-E2
AK6420AF-E2	AK6420HF
AM26LS32ACNS	AM26LS32PC
AM26LS32ACNSR	AM26LS32PC
AM29F040B-120JC	AM29F040-90JC
BA6285FP-E2	BA6285FP
BA6286	BA6286N
BA6444FP-E2	BA6444FP
BP-015	BP-015
BR93LC46F-E2	BR93LC46F
BX-3914	BX3914
CLC505AJE	CLC505AJE
CLC505AJE-T	CLC505AJE
CXA1370Q	CXA1370Q
CXA1450M-TH	CXA1450M
CXA1451M	CXA1451M
CXA1451M-TH	CXA1451M
CXA1479Q	CXA1479Q
CXA3051R	CXA3051R
CXA3053R	CXA3053R
CXA3054R	CXA3054R
CXB1341R	CXB1341R
CXB1342R	CXB1342R
CXD101-106Q	CXD101-106Q
CXD104-114Q	CXD104-114Q
CXD1095AR	CXD1095AR
CXD1095BQ	CXD1095Q
CXD1171M	CXD1171M
CXD1171M-TH	CXD1171M
CXD1175AM-TH	CXD1175P
CXD206-104Q	CXD206-104Q
CXD2202Q	CXD2202Q
CXD2209Q	CXD2209Q
CXD2221Q	CXD2221Q
CXD2307R	CXD2307R
CXD2310AR-T4	CXD2310R
CXD303-101Q	CXD303-101Q
CXD304-106Q	CXD304-106Q
CXD8280AQ	CXD8280AQ
CXD8281Q	CXD8281Q
CXD8384Q	CXD8384Q
CXD8385Q	CXD8385Q
CXD8386AQ	CXD8386AQ
CXD8395AQ	CXD8395Q

Index

IC	Page or ID No.
CXD8804Q	CXD8804Q
CXD8810BQ	CXD8810AQ
CXD8811AQ	CXD8811AQ
CXD8817Q	CXD8817Q
CXD8818R	CXD8818R
CXD8819AQ	CXD8819AQ
CXD8820AR	CXD8820AR
CXD8821Q	CXD8821Q
CXD8859AQ	CXD8859AQ
CXD8935BQ	CXD8160Q
CXD8944Q	CXD8944Q
CXD8945BR	CXD8945BR
CXD8946Q	CXD8946Q
CXD8953Q	CXD8953Q
CXD8973BR	CXD8973AR
CXD8974AR	CXD8974AR
CXD8979R	CXD8979R
CXD8985AQ	CXD8985AQ
CXD8990R	CXD8990R
CXD8997R	CXD8997R
CXD9001AR	CXD9001AR
CXD9008Q	CXD8382AQ
CXD9012AR	CXD9012R
CXD9025R	CXD9025R
CXK1203AR	CXK1203R
CXK1203AR-T4	CXK1203R
CXK48324R	CXK48323R
CXK48324R-T6	CXK48323R
CXP80P624AQ-1-010	CXP80P624A
DG201BDY-T1	2-7
DS3691MX	DS3691M
DSPB56007FJ66	DSP56007FJ66
HD6415108RF10	HD6415108RVF5
HD6433437WV09X	HD64F3434-F16
HD64F3048F16	HD64F3048F
HM6264ALFP-10T	CXK5864AP-10L
HM628512BLTT-5SLZ	HM628512LP-7
IDT71V016S20Y-TL	IDT71V016S20Y-TL
IDT79R3041-20PF	IDT79R3041-20PF
L78M09T TL	L78M05T FA
LA7205M	LA7205M
LA7205M-TE-L	LA7205M
LC3564BM-70-TLM	CXK5864AP-10L
LC75821W	LC75821W
LM1881M	LM1881N
LM1881MX	LM1881N
LM2903PW-E05	UA393DC
LT1227CS8	LT1227CS8
LT1227CS8-E2	LT1227CS8
LT1252CS8	LT1252CS8
LT1252CS8-E2	LT1252CS8
LTC1458CG-E2	LTC1458CG-E2
M48T18-100MH1TR	M48T18-100MH1TR
M51957BFP	M51957BFP
M5M5408ATP-55LL-EL	HM628512LP-7
M62352GP	M62352P
M62352GP-75ED	M62352P
MAX202CSE	MAX202CSE
MAX202CSE-T	MAX202CSE
MB3761PF-ER	MB3761PF
MB3793-42PNF	MB3793-42PNF
MB3793-42PNF-ER	MB3793-42PNF
MB8421-90LPFQ	MB8421-90LPFQ
MB88E346PFV-G-BND-ER	MB88E346PFV-G-BND-ER
MB90096PF-G-139-BND-ER	MB90096PF-G-139-BND-ER
MBM29F400BA-90PF	MBM29F400BA-12PF
MC10H116M	MC10116L
MC10H116MEL	MC10116L
MC14053BDTR2	CD4053BE
MC14053BF	CD4053BE
MC14053BFEL	CD4053BE
MC14538BFEL	MC14538BCP
MC14577CF	MC14577AF
MC14577CFEL	MC14577AF
MC34182DR2	RC4558
MSM514400DL-60SJDR1	MSM514400ASJ-70
MSM6524GS-KR1	MSM6524GS-VK
NJM1496M	MC1496P
NJM1496M-TE2	MC1496P
NJM2041M-D	RC4558
NJM2041M-D(TE2)	RC4558
NJM2119M(TE1)	LM358N
NJM2119M(TE2)	LM358N
NJM2902V(TE2)	NJM2902N
NJM2903V(TE2)	UA393DC
NJM2904V(TE2)	LM358N
NJM3403AV	NJM3403AD
NJM3403AV(TE2)	NJM3403AD
NJM3404AV	LM358N
NJM3404AV(TE2)	LM358N
NJM360M	LM360N
NJM360M-TE2	LM360N
NJM431U	NJM431U
NJM431U-TE1	NJM431U
NJM4556AM	RC4558
NJM4556AM-A-TE2	RC4558
NJM4558V-TE2	RC4558
NJM4560MD TE2	RC4558
NJM4565M-A	RC4558
NJM4580E-D	RC4558
NJM4580E-D-TE2	RC4558
NJU7062M(TE2)	LM358N
NJU7064V(TE2)	NJU7024M
NM24C16LEM8	2-7
NM24C16LEM8X	2-7
REF-03GSR	REF-03GS
S-8054HNM-CQ-T1	S-8054HN-CB
S-80727-SN-DQ-T1	S-80720SN-DH
S-80745SL-A9	S-80727SL-AQ
S-80745SL-A9-T1	S-80727SL-AQ
S-80833ALUP-EAX-T2	S-8054ALR-LN
S-80840ANUP-ED4-T2	S-8054HN-CB

http://getMANUAL.com

IC	Page or ID No.
S-81230SGUP-DQB-T1	S-81225AG-RH
SBX1645-01	SBX1645-01
SC7S00F	TC7S00F
SN74HC00ANSR	2-7
SN74HC00APW-E05	TC74HC00P
SN74HC00APW-E20	TC74HC00P
SN74HC04APW-E05	TC74HC04P
SN74HC04APW-E20	TC74HC04P
SN74HC08APW-E05	TC74HC08P
SN74HC08APW-E20	TC74HC08P
SN74HC125APW-E05	MC74HC125N
SN74HC151APW-E20	TC74HC151P
SN74HC157ANS	TC74HC157P
SN74HC157ANSR	TC74HC157P
SN74HC174APW-E05	TC74HC174P
SN74HC193ANS	TC74HC193P
SN74HC193ANS-E05	TC74HC193P
SN74HC244APW-E05	TC74HC244P
SN74HC245APWR	TC74HC245P
SN74HC32APW-E05	TC74HC32P
SN74HC32APW-E20	TC74HC32P
SN74HC574APW-E05	TC74HC574P
SN74HC574APW-E20	TC74HC574P
SN74HC74APW-E05	TC74HC74P
SN74HC86APWR	TC74HC86P
SN74HCT244APW-E05	TC74HC244P
SN74HCT245ANSR	TC74HC245P
SN74HCT245APW-E05	TC74HC245P
SN74HCT541APWR	MC74HC541N
SN74LS221NS	SN74221N
SN74LS221NSR	SN74221N
SN755721DGG	2-8
SN755731DGG	2-8
SSM-2142P	SSM-2142P
SSM2018TS-REEL	2-8
TC4053BFT(EL,N)	CD4053BE
TC4S66F	SC14S66F
TC4S66F(TE85R)	SC14S66F
TC4S71F	TC7S32F
TC4S71F(TE85R)	TC7S32F
TC4W53F	TC4W53FU
TC4W53F(TE12R)	TC4W53FU
TC4W53FU	TC4W53FU
TC4W53FU(TE12R)	TC4W53FU
TC4W66FU	TC4W66F
TC4W66FU(TE12R)	TC4W66F
TC4W66FU(TE12R)	TC4W66F
TC74HC123AF	TC74HC123P
TC74HC123AF(EL)	TC74HC123P
TC74HC4051AFT(EL)	MC74HC4051N
TC74HC4052AFT(EL)	MC74HC4052N
TC74HC4053AFT(EL)	MC74HC4053F
TC74HC4066AFT(EL)	MC74HC4066N
TC74HCT04AF	TC74HC04P
TC74HCT04AF(EL)	TC74HC04P
TC74VHC00F	TC74HC00P
TC74VHC00F(EL)	TC74HC00P
TC74VHC00FT(EL)	TC74HC00P
TC74VHC02FT(EL)	TC74HC02P

IC	Page or ID No.
TC74VHC04FT(EL)	TC74HC04P
TC74VHC08F(EL)	TC74HC08P
TC74VHC08FT(EL)	TC74HC08P
TC74VHC11FT(EL)	TC74HC11P
TC74VHC123AFT(EL)	TC74HC123P
TC74VHC125FT(EL)	MC74HC125N
TC74VHC126FT(EL)	MC74HC126N
TC74VHC138FT(EL)	TC74HC138P
TC74VHC139FT(EL)	TC74HC139P
TC74VHC14F(EL)	TC74HC14P
TC74VHC157FT(EL)	TC74HC157P
TC74VHC163FT(EL)	TC74HC163P
TC74VHC164FT(EL)	TC74HC164P
TC74VHC175FT(EL)	TC74HC175P
TC74VHC21FT(EL)	TC74HC21P
TC74VHC221AFT(EL)	TC74HC221P
TC74VHC244F	TC74HC244P
TC74VHC244F(EL)	TC74HC244P
TC74VHC244FT(EL)	TC74HC244P
TC74VHC245FT(EL)	TC74HC245P
TC74VHC32F	TC74HC32P
TC74VHC32F(EL)	TC74HC32P
TC74VHC32FT(EL)	TC74HC32P
TC74VHC541FT(EL)	MC74HC541N
TC74VHC573FT(EL)	TC74HC573F
TC74VHC574FT(EL)	TC74HC574P
TC74VHC74FT(EL)	TC74HC74P
TC74VHC86FT(EL)	TC74HC86P
TC74VHCT244AFT(EL)	TC74HC244P
TC74VHCT245AFT(EL)	TC74HC245P
TC74VHCT541AFT(EL)	MC74HC541N
TC7S00F(TE85R)	TC7S00F
TC7S02FU(TE85R)	TC4S01F
TC7S04FU(TE85R)	TC7S04F
TC7S08F	TC7S08F
TC7S08F(TE85R)	TC7S08F
TC7S08FU(TE85R)	TC7S08F
TC7S14FU(TE85R)	TC7S14FU
TC7S32FU(TE85R)	TC7S32F
TC7S66FU	SC14S66F
TC7S66FU(TE85R)	SC14S66F
TC7S86FU	TC7S86FU
TC7S86FU(TE85R)	TC7S86FU
TC7SET08FU(TE85R)	TC7S08F
TC7SH00FU-TE85R	TC7S00F
TC7SH02FU	TC4S01F
TC7SH02FU-TE85R	TC4S01F
TC7SH04F(TE85R)	TC7S04F
TC7SH04FU	TC7S04F
TC7SH08FU-TE85R	TC7S08F
TC7SH32FU-TE85R	TC7S32F
TC7SH86FU-TE85R	TC7S86FU
TC7W00FU	TC7W00F
TC7W00FU(TE12R)	TC7W00F
TC7W02F	TC7W02F
TC7W02FU(TE12R)	TC7W02F
TC7W04FU	TC7W04F
TC7W04FU(TE12R)	TC7W04F
TC7W08FU	TC7W08F
TC7W08FU(TE12R)	TC7W08F

Index

IC	Page or ID No.
TC7W14FU(TE12R)	TC7W14FU
TC7W32FU	TC7W32FU
TC7W32FU(TE12R)	TC7W32FU
TC7W53FU(TE12R)	TC4W53FU
TC7W74FU	TC7W74FU
TC7W74FU(TE12R)	TC7W74FU
TC7WH241FU(TE12R)	TC7W241FU
TC7WH74FU(TE12R)	TC7W74FU
TC7WH74FU(TR12R)	TC7W74FU
TL062CPW	RC4558
TL062CPW-E05	RC4558
TL082CPW-E05	RC4558
TL084CPWR	TL084CN
TL1451ACPW-E05	TL1451CNS
TL1591CP	2-7
TL431CPK	NJM431U
TL5001CD	TL5001
TL5001CDR	TL5001
TLC272CPW-E05	TLC272CP
TLC2932IPW	TLC2932IPW
TLC2932IPW-E05	TLC2932IPW
TLC2932IPW-E20	TLC2932IPW
TLC549IPS	TLC548
TLC549IPSR	TLC548
UPC1663G	UPC1663C
UPC1663G-E2	UPC1663C
UPC4570G2	RC4558
UPC4570G2-E2	RC4558
UPD42280GU-30-E2	UPD42280GU-30
UPD4516161AG5-A10B-9NF	UPD4516161G5-A12-7JF
UPD4516821AG5-A10B-9NF	UPD4516821G5-A12-7JF
UPD4702G	UPD4702G
UPD485506G5-25-7JF-E2	UPD485506G5-25-7JF
UPD71055GB-10-3B4	UPD71055G
UPD72001GC-11-3B6	UPD72001GC-3B6
UPD75106GF-J20-3BE	UPD75106G
UPD78011BGC-608-AB8	UPD78011GC-533-AB8
UPD78014FGC-632-AB8	UPD78011GC-533-AB8
UPD78014FGC-639-AB8	UPD78011GC-533-AB8
X24164SIT1	X24164SI
XRD7523AID-JTR	MP7523

DIODE

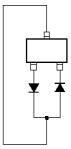

MA740
MA740-TX

IC

DG201BDY-T1 (SILICONIX)

ANALOG SWITCH
—TOP VIEW—

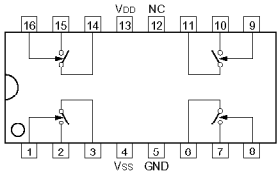

CONT IN	SW
0	ON
1	OFF

0 : LOW LEVEL
1 : HIGH LEVEL

NM24C16LEM8 (NS)
NM24C16LEM8X

SERIAL EEPROM
—TOP VIEW—

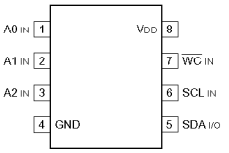

INPUT
A0 - A2 : ADDRESS
SCL : SERIAL CLOCK
WC : WRITE CONTROL

INPUT/OUTPUT
SDA : SERIAL DATA

NOTE :

TYPE	MEMORY	PIN 7
NM24C16	16 K	NC
X24C02	2 K	WC
X24C04	4 K	TEST
X24C08	8 K	TEST

TL1591CP (TI)
SN74HC00ANSR

SAMPLE AND HOLD
—TOP VIEW—

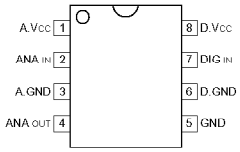

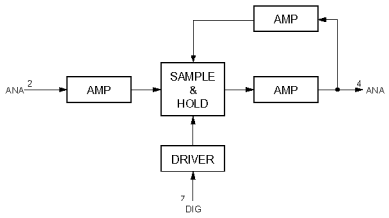

SN755721DGG (TI)

32-BIT FL DISPLAY DRIVER

—TOP VIEW—

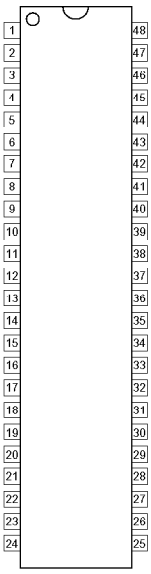

INPUTS

CL : CLEAR
CLK : CLOCK
DIN : SERIAL DATA
LE : LATCH ENABLE

OUTPUTS

DOUT : SERIAL DATA
HVO01 - HVO32 : DRIVE

OTHER

NC : NO CONNECTION

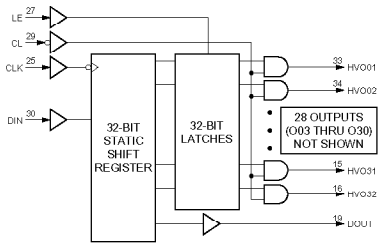

PIN NO.	I/O	SIGNAL	PIN NO.	I/O	SIGNAL	PIN NO.	I/O	SIGNAL	PIN NO.	I/O	SIGNAL
1	O	HVO23	13	O	HVO29	25	I	CLK	37	O	HVO05
2	O	HVO22	14	O	HVO30	26	—	NC	38	O	HVO06
3	O	HVO21	15	O	HVO31	27	I	LE	39	O	HVO07
4	O	HVO20	16	O	HVO32	28	—	NC	40	O	HVO08
5	O	HVO19	17	—	GND	29	I	CL	41	O	HVO09
6	O	HVO18	18	—	Vcc2	30	I	DIN	42	O	HVO10
7	O	HVO17	19	O	DOUT	31	—	Vcc2	43	O	HVO16
8	O	HVO24	20	—	NC	32	—	GND	44	O	HVO15
9	O	HVO25	21	—	Vcc1	33	O	HVO01	45	O	HVO14
10	O	HVO26	22	—	NC	34	O	HVO02	46	O	HVO13
11	O	HVO27	23	—	GND	35	O	HVO03	47	O	HVO12
12	O	HVO28	24	—	NC	36	O	HVO04	48	O	HVO11

SN755731DGG (TI)

32-BIT FL DISPLAY DRIVER

TOP VIEW

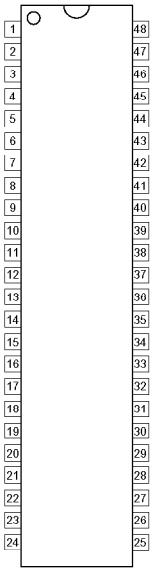

INPUTS

CL : CLEAR
CLK : CLOCK
DIN : SERIAL DATA
LE : LATCH ENABLE

OUTPUTS

DOUT : SERIAL DATA
HVO01 - HVO32 : DRIVE

OTHER

NC : NO CONNECTION

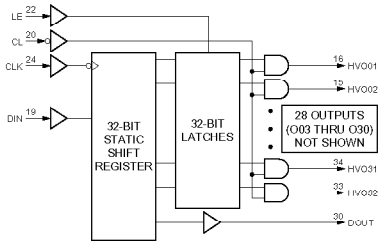

PIN NO.	I/O	SIGNAL	PIN NO.	I/O	SIGNAL	PIN NO.	I/O	SIGNAL	PIN NO.	I/O	SIGNAL
1	O	HVO11	13	O	HVO04	25	—	NC	37	O	HVO28
2	O	HVO12	14	O	HVO03	26	—	GND	38	O	HVO27
3	O	HVO13	15	O	HVO02	27	—	NC	39	O	HVO26
4	O	HVO14	16	O	HVO01	28	—	Vcc1	40	O	HVO25
5	O	HVO15	17	—	GND	29	—	NC	41	O	HVO24
6	O	HVO16	18	—	Vcc2	30	O	DOUT	42	O	HVO17
7	O	HVO10	19	I	DIN	31	—	Vcc2	43	O	HVO18
8	O	HVO09	20	I	CL	32	—	GND	44	O	HVO19
9	O	HVO08	21	—	NC	33	O	HVO32	45	O	HVO20
10	O	HVO07	22	I	LE	34	O	HVO31	46	O	HVO21
11	O	HVO06	23	—	NC	35	O	HVO30	47	O	HVO22
12	O	HVO05	24	I	CLK	36	O	HVO29	48	O	HVO23

SSM2018TS-REEL (AD)

VOLTAGE CONTROLLED AMPLIFIER

—TOP VIEW—

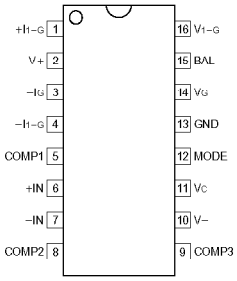

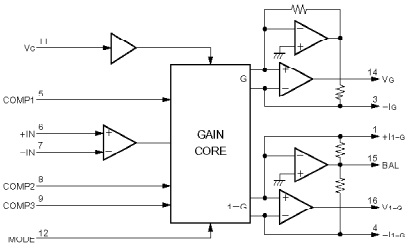

INPUTS

–IN : NEGATIVE SIGNAL
+IN : POSITIVE SIGNAL
BAL : BALANCE CONTROL
COMP1 - COMP3 : COMPENSATION
MODE : OPERATION MODE SELECT
VC : OPERATIONAL VOLTAGE CONTROL

OUTPUTS

–IG-G, –IG : NEGATIVE CURRENT SIGNAL
+IG-G : POSITIVE CURRENT SIGNAL
V1–G, VG : VOLTAGE OUTPUT FOR FEEDBACK

Section 3
Circuit Description and Block Diagrams

Schematic Diagram Index

		Page
A.	APR-27A	3-10
	AU-249	3-11
C.	CP-344/344A	3-11
	CP-354	3-25, 27
	CT-209	3-22
D.	DC-97	3-19
	DEC-97	3-13
	DM-114/114P	3-14
	DPR-87	3-17
E.	EQ-72	3-18
H.	HP-100	3-12
P.	PA-218	3-11
	PSW-72	3-7
R.	RE-150	3-19
	RE-158	3-19
S.	SDI-23	3-20
	SE-529	3-21
	SR-65	3-9
	SV-194A	3-21
	SW-21	3-22
	SW-22	3-22
	SW-23	3-22
	SY-259B	3-23
	SY-260	3-24
T.	TG-191	3-25
V.	VFD assembly	3-26
	VPR-34	3-27
Overall		3-7

Index

System	Board	Circuit Function	Page
Digital processing	DPR-87	Digital data processor Video BRR* encoder/decoder, ECC** encoder/decoder (Outer error correction)	3-17
	SDI-23	4:2:2 component serial digital interface	3-20
Video processing	VPR-34	Video signal processor Video process D-A, Composite encoder	3-27
	DEC-97	Analog composite decoder	3-13
Analog Betacam video PB processing	DM-114 (for DNW-A28) DM-114P (for DNW-A28P)	RF demodulator for analog Betacam PB, TBC***	3-14
Audio processing	APR-27A	Audio signal processor	3-10
	AU-249	Audio A-D (Analog CH1/2 input), Audio D-A (Analog CH1/2 output) Audio D-A (Monitor output)	3-11
	PA-218	Head amplifier for analog Betacam PB	3-11
RF processing	EQ-72	RF equalizer REC current control, PB EQ, Analog Betacam PB buffer Inner error correction	3-18
Timing generator	TG-191	Reference timing signal and clock generator	3-25
System control	SY-259B	System control (SYS1)	3-23
	SY-260	System control (SYS2)	3-24
Motor driver/sensor	SV-194A	Servo control, Motor driver, Sensors	3-21
	SR-65	S tension sensor	3-9
Front panel	SW-21	Lower control panel	3-22
	SW-22	Control panel (EJECT, CTL/TC/U-BIT, HOLD, RESET, SET, MENU)	3-22
	SW-23	Control panel (WARNING Indi., REC INHI, METER, MONITOR)	3-22
	CT-209	Jog dial	3-22
	VFD assembly	Display and function control	3-26
Connector panel	CP-344 (for SY) CP-344A (for J)	Connector board (AUDIO/MONITOR system), select switch and audio amplifier (AUDIO INPUT/OUTPUT, MONITOR OUTPUT)	3-11
	CP-354	Connector board (VIDEO/REMOTE/SDI/DC/TC system), select switch and amplifier (VIDEO INPUT/OUTPUT, REMOTE, SDI IN/OUT, DC OUT, TC IN/OUT)	3-25, 27
	DC-97	DC IN terminal board	3-19
Power	RE-150	Switching regulator	3-19
	RE-158	Breaker	3-19
Others	MB-757A	Motherboard	—
	HP-100	Headphones jack	3-12
	PSW-72	Power switch	3-7
	SE-529	Cassette compartment	3-21

*BRR: Bit Rate Reduction **ECC: Error Correction Coding ***TBC: Time Base Corrector

Circuit Description

(1) Video Signal Processing Block (CP-354, DEC-97, SDI-23, VPR-34, and TG-191 Boards)

Recording system

The analog composite video signal input from the external equipment to the VIDEO IN connector (on the CP-354 board) is converted from analog to digital on the DEC-97 board. After that, the signal is converted into a digital component signal using a composite decoder and sent to the input time base corrector (TBC) on the SDI-23 board.
The SDI signal input from the external equipment to the SDI IN connector is converted from serial to parallel on the SDI-23 board and separated into a video signal and audio signal using a D1 decoder. One of the SDI video signal and the analog composite video signal described above is selected using an input TBC. The setup component of the video signal output from the input TBC is eliminated (for an NTSC system only), and VITC signal of the video signal is read and then added to the video signal. The signal is then sent to the DPR-87 board as REC data. It is also sent to the VPR-34 board as EE data.

Playback system

The SX PB video signal sent from the DPR-87 board is processed by the JOG processing block on the VPR-34 board and sent to the video processor IC. In the video processor IC, one of the SX PB video signal, the analog Betacam PB video signal sent from the DM-114/114P board, and the EE video signal sent from the SDI-23 board is selected, and selected signal is video processed (gain adjustment, setup adjustment, and blanking addition). The digital component video signal output from the video processor IC branches to two paths using a composite encoder IC. One is encoded to a digital composite video signal, and the other is directly sent to the SDI-23 board.
The digital composite video signal output from the composite encoder IC is converted from digital to analog, and output from the connector panel (CP-354 board).
The output signal branches to two paths. Characters can be superimposed on VIDEO OUTPUT2.
The digital component video signal sent to the SDI-23 board is multiplexed with an audio signal, converted from parallel to serial, then output from the connector panel.

Sync system

A sync signal is generated on the TG-191 board. The signal input from the REF VIDEO IN or VIDEO IN connector is sync-separated to produce a sync signal (sync or burst). For SDI input locking, moreover, a sync signal is generated on the SDI-23 board by the signal input from the SDI IN connector. Based on the generated sync signal, a REF signal and various timing signals (CF, GOP, FRAME , HD, VD, and AUDIO ID signals) for the unit are generated on the TG-191 board . In addition, the video and audio clock signals synchronized with this sync signal are generated and sent to each board together with timing signals.

(2) Audio Signal Processing Block (CP-344, AU-249, SDI-23, APR-27A, and HP-100 Boards)

The analog audio signal input from the external equipment to the AUDIO IN connector (on the CP-344 board) is switched in an input level on the CP-344 board and controlled in a level.
The resultant signal is sent to the AU-249 board. On the CP-344 board, phantom power is also supplied.
An automatic gain control (AGC) is applied to the audio signal sent to the AU-249 board. This audio signal and the Dolby noise-reduced analog Betacam PB audio signal are switched and emphasized. The resultant signal is converted from analog to digital and sent to the APR-27A board. For the SDI signal input from the external equipment to the SDI In connector, an audio signal and various control signals (mute flag, Z flag, and C bit signals) are extracted on the SDI-23 board and sent to the APR-27A board.
On the APR-27A board, five-field sequence processing (for NTSC only) and JOG processing are performed for the SX PB audio signal sent from the DPR-87 board.
This SX PB audio signal, the analog input signal sent from the AU-249 board, and the SDI input signal sent from the SDI-23 board are switched, swap in channels, mixed in channels, and muted. These signals are then sent to the boards below.

REC signal: To the DPR-87 board
LINE and MONITOR output signals: To the AU-249 board
SDI output signal: To the SDI-23 board

The LINE output signal sent to the AU-249 board is converted from digital to analog and de-emphasized. The signal is then output through the output amplifier on the CP-344 board from the connector panel.

The MONITOR output signal sent to the AU-249 board is converted from digital to analog and de-emphasized. The output signal is then gain-controlled on the HP-100 board and output through the output amplifier on the CP-344 board from the connector panel.
The MONITOR output signal can also be monitored using headphones or speaker.
The channel type of the signal to be output to the LINE and MONITOR output connectors can be set using a sub menu.
The output audio signal sent to the SDI-23 board is multiplexed with a video signal using an SDI encoder, converted from parallel to serial, and output from the connector panel.

(3) Digital Signal Processing Block (DPR-87 Board) and RF Block (EQ-72 Board and Drum Assembly)

Recording system

One of the external input video signal (SDI/composite) and SX PB video signal sent from the SDI-23 board is selected using the video data selector on the DPR-87 board. The selected signal is passed through a pre-filter and SX-encoded
using a bit rate reduction encoder to compress the data rate to approximately 1/10.
The compressed video signal and the REC audio signal sent from the APR-27A board are adjusted in delay ,and multiplexed using an ECC encoder. An error correction code is added after that. In this stage, the system data, including NT (non-tracking) control information, as well as outer and inner ECC codes is also added and sent to the EQ-72 board.
The REC signal sent from the DPR-87 board is level-modulated on the EQ-72 board according to the REC current value and sent through a rotary transformer to the drum as REC data. Moreover, the multiplexed select control signals of each head are sent to the drum.
The REC data sent to the drum is recorded on the tape. At the same time, the switching timing for head and REC current value are controlled by a an MPX decoder,

Playback system

The PB output signals of each head are amplified using a pre-amplifier. After that, the PB RF output signals of each head are multiplexed based on the decoded head select control signal and sent through a rotary transformer to the EQ-72 board.
One of the two-channel PB RF signals sent to the EQ-72 board is sent through an amplifier to the DM-114/114P board as an analog Betacam PB signal. In the other channel, waveform equalization, viterbi decoding, and inner error correction are performed, and the PB RF signal is sent to the DPR-87 board as a Betacam SX PB signal.
The Betacam SX PB signal sent from the EQ-72 board is non-tracked and outer-error corrected on the DPR-87 board. The signal is then separated into a video signal and audio signal. The video signal also branches to two paths.

One is sent to the video data selector on the DPR-87 board as a REC signal during insert editing. The other is sent to the VPR-34 board and processed by a video jog processing block. Like the video signal, the audio signal is also sent to the APR-27A board and processed by an audio jog processing block.

(4) Analog Betacam Playback Block (DM-114/114P and PA-218 Boards)

An analog Betacam PB video signal is processed on the DM-114 board. The RF signals (Y and C signals) sent from the EQ-72 board are waveform-equalized and FM-demodulated, then converted from analog to digital. The converted signals are then time-base corrected using field memory for various processings (dropout compensation, edge noise reduction, etc.), Y/C signal multiplexing,
and setup elimination (for NTSC only) and sent to the VPR-34 board. A longitudinal analog Betacam audio signal is processed on the PA-218 board. The PB signal sent from the audio head is waveform-equalized and sent to the AU-249 board.

(5) System Control Block and Servo Block (SY-259B, SY-260, and SV-194A Boards)

This unit contains two CPUs (SY1 CPU and SY2 CPU) for system control and one CPU (Servo CPU) for servo control.

SY1 CPU (IC106 on the SY-259B board) uses RISC CPU, and the operation clock is 20 MHz.
The SY1 CPU controls the operation below.

- Switch and LED control on the front panel
- Receive and transmit the signals with external control equipment
- FL display panel
- Superimposition of characters on the monitor output and FL display panel

Like SY1 CPU, SY2 CPU (IC108 on the SY-260 board) also uses RISC CPU, and the operation clock is 20 MHz.
The SY2 CPU controls the operation below.

- Control of each main board
- Self diagnosis of each main board
- LTC signal read and write

Servo CPU uses a 16-bit CPU, and the operation clock is 10 MHz.
The servo CPU controls the operation below.

- Control of drum and motors
- Detection of sensor and FG/PG

The communication between SY1 CPU and SY2 CPU is carried out via the dual port RAM (IC400) on the SY-259B board.
The communication between SY2 CPU and servo CPU is carried out via the dual port RAM (IC300) on the SV-194A board.

(6) Power Supply Block (RE-150, RE-158, and PSW-72 Boards)

The +12 V DC voltage input from the battery or DC IN connector is sent through the breaker on the RE-158 board to the RE-150 board. The voltage is then turned on and off using the power switch on the PSW-72 board and sent to each board as an UNREG +12 V. Moreover, various DC voltages are generated using the DC-DC converter based on a synchronous PWM switching regulator and supplied to each board.

http://getMANUAL.com

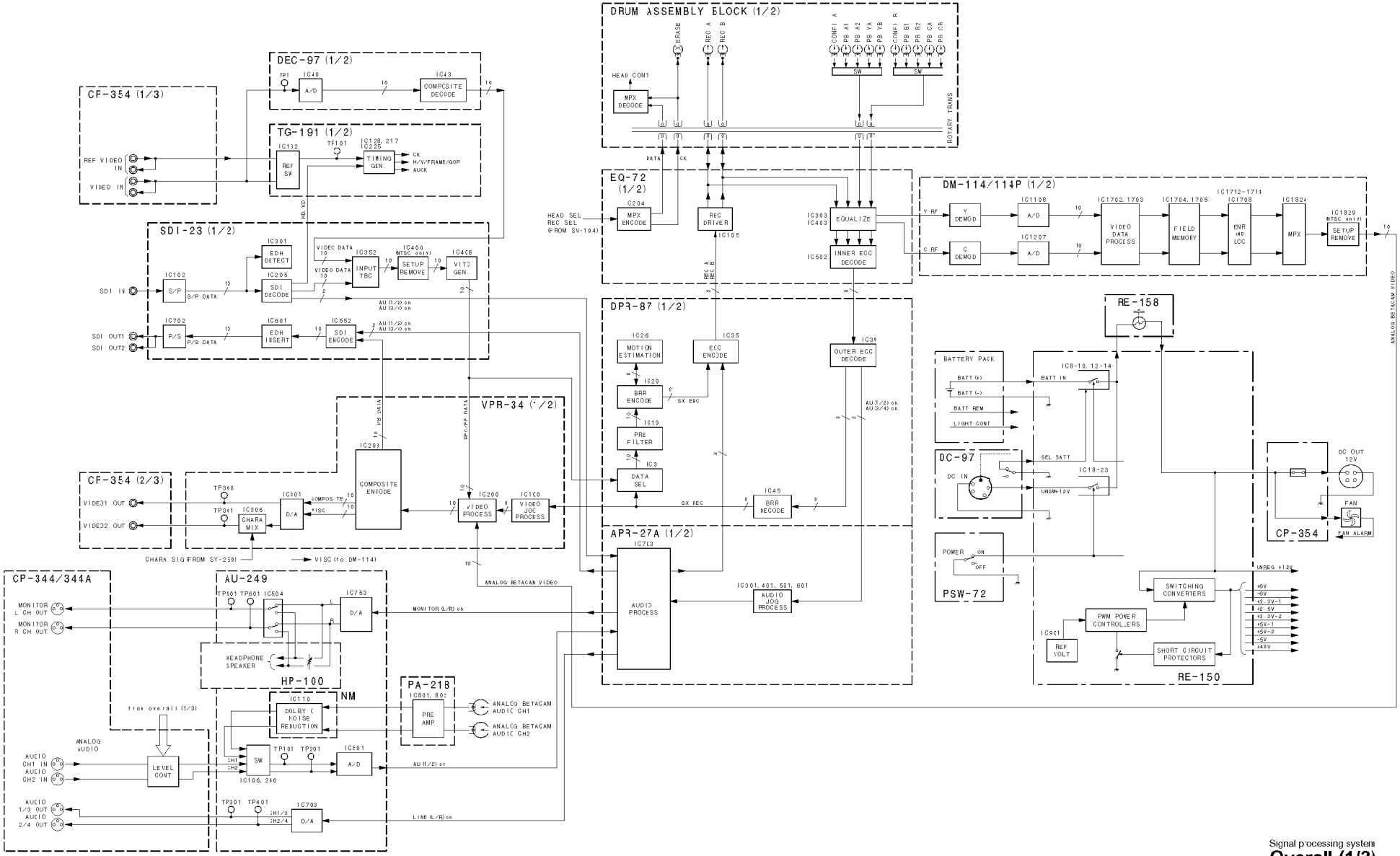

Signal processing system

Overall (1/3)

LOT NO. 905-

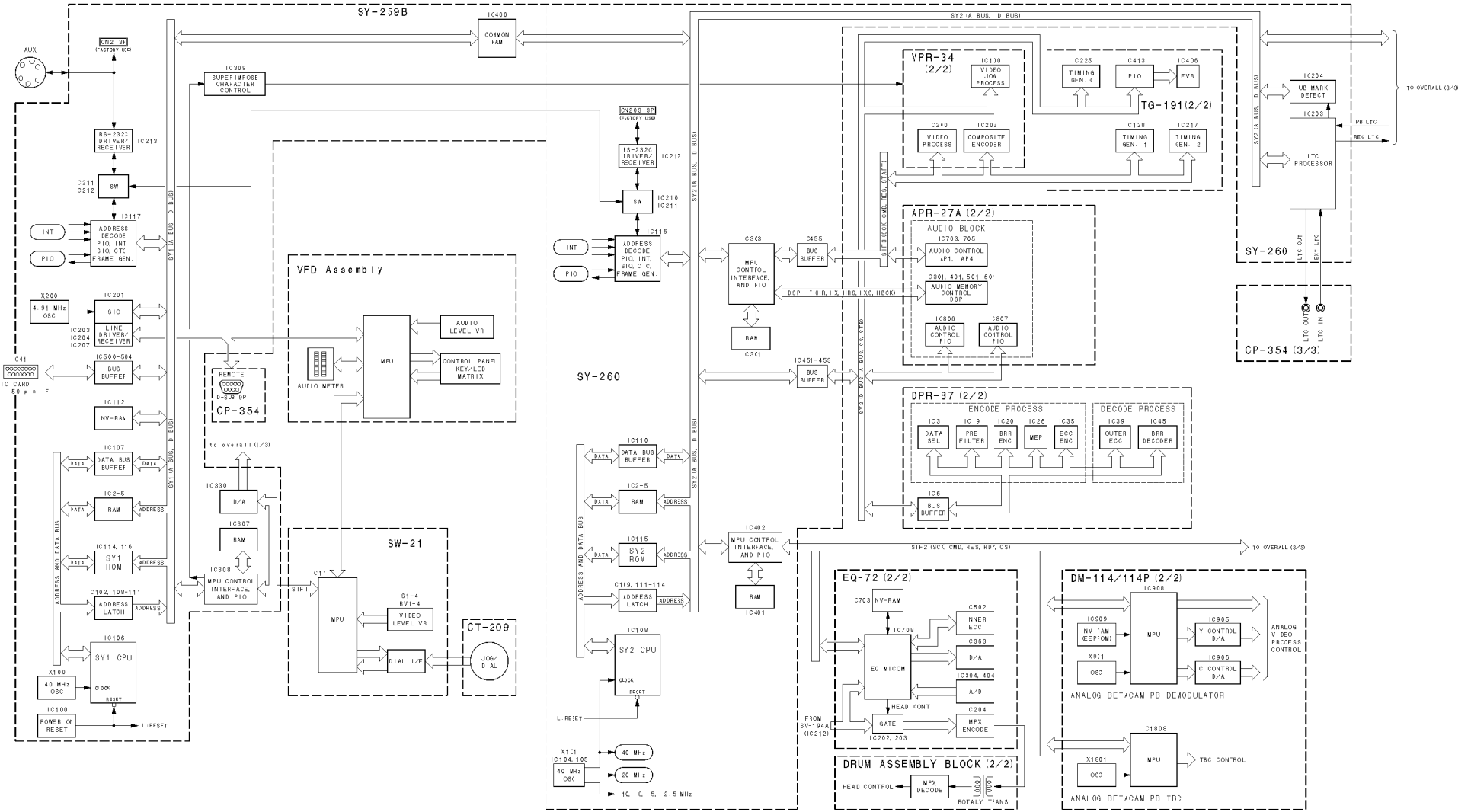

Servo/System control system (1/2)

Overall (2/3)

LOT NO 905-

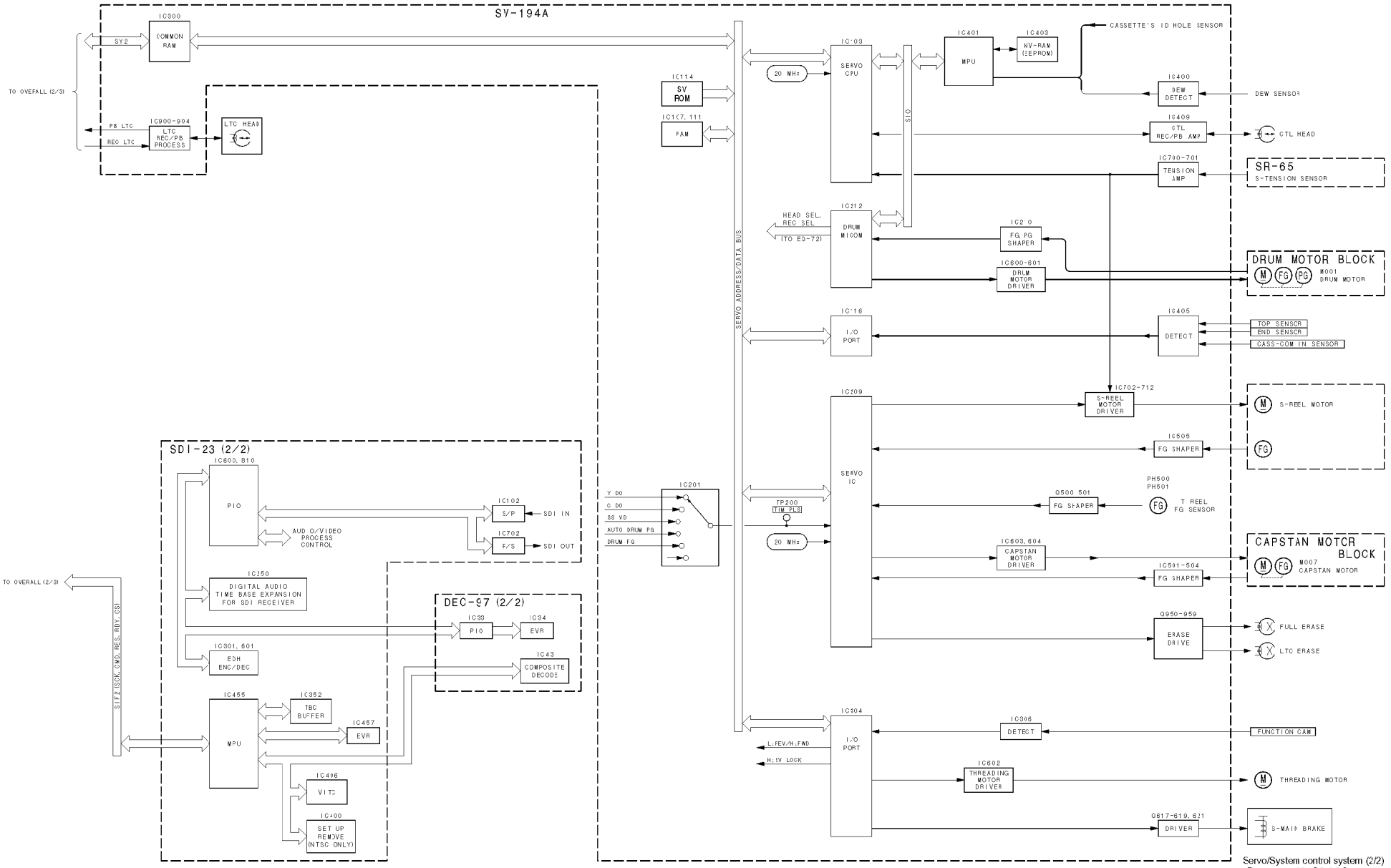

Servo/System control system (2/2)

Overall (3/3)

LOT NO. 905-

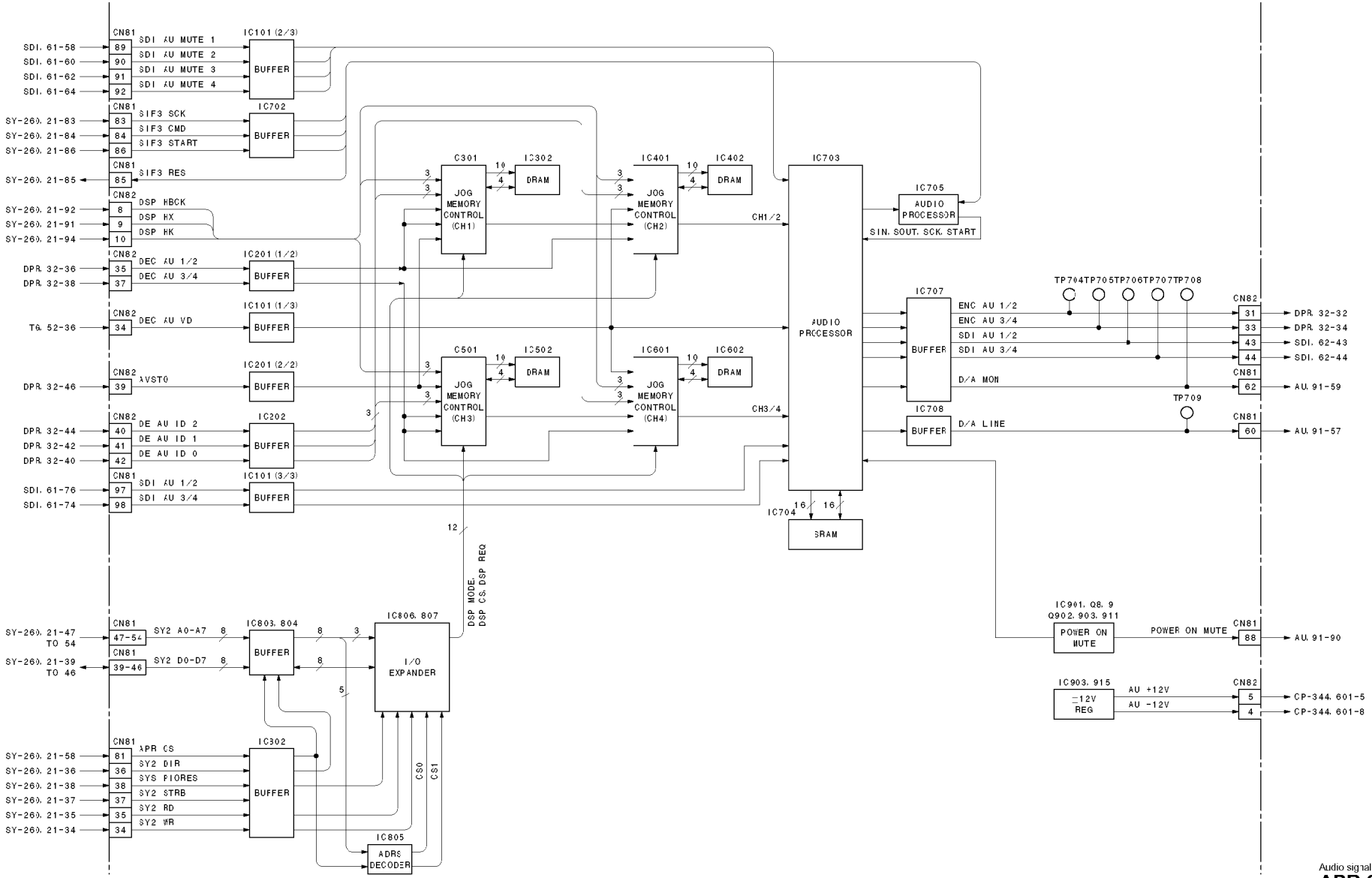

Audio signal processor
APR-27A
LOT NO. 905-

DNW-A28
DNW-A23P

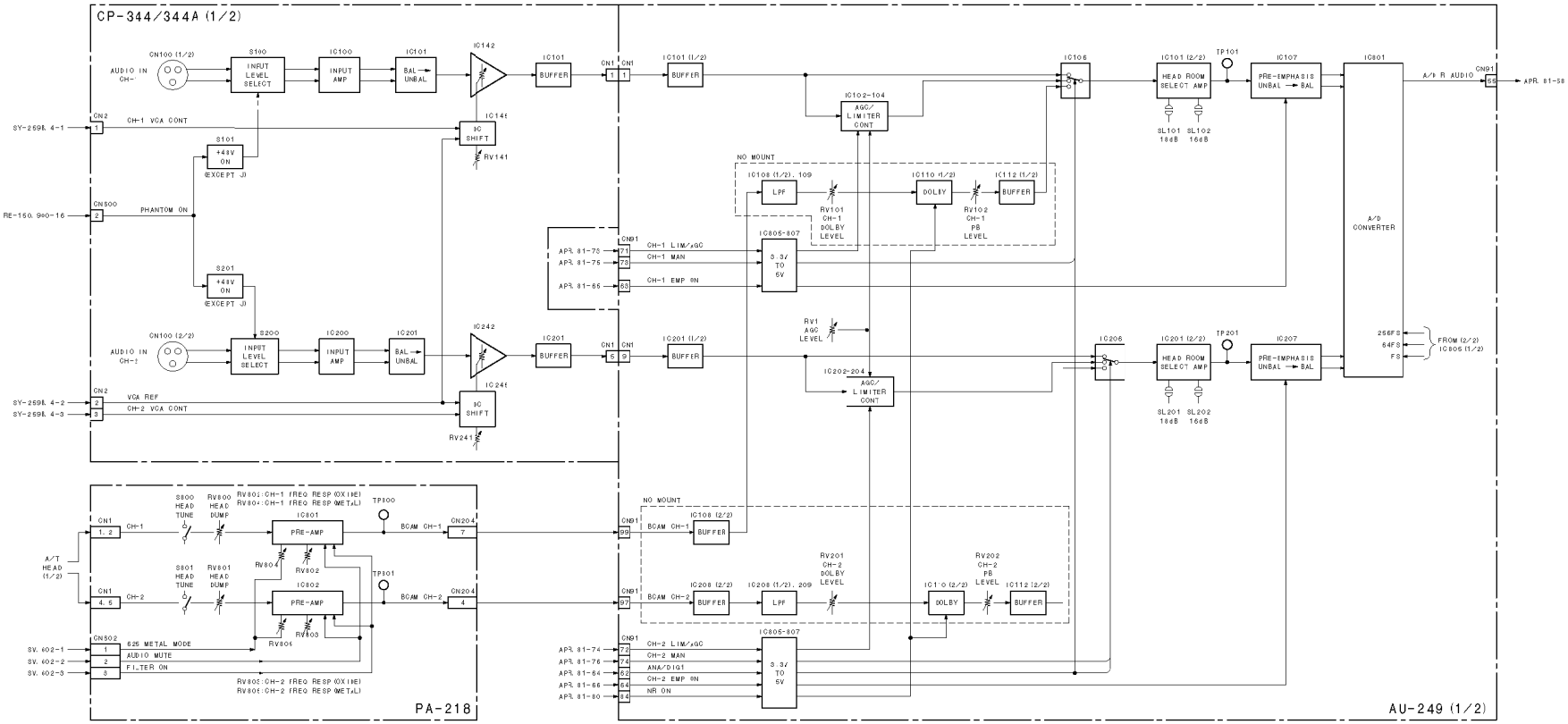

Audio A-D (Analog CH1/2 input), Audio D-A (Analog CH1/2 output)
Audio D-A (Monitor output)

AU-249 (1/2)

LOT NO. 905-

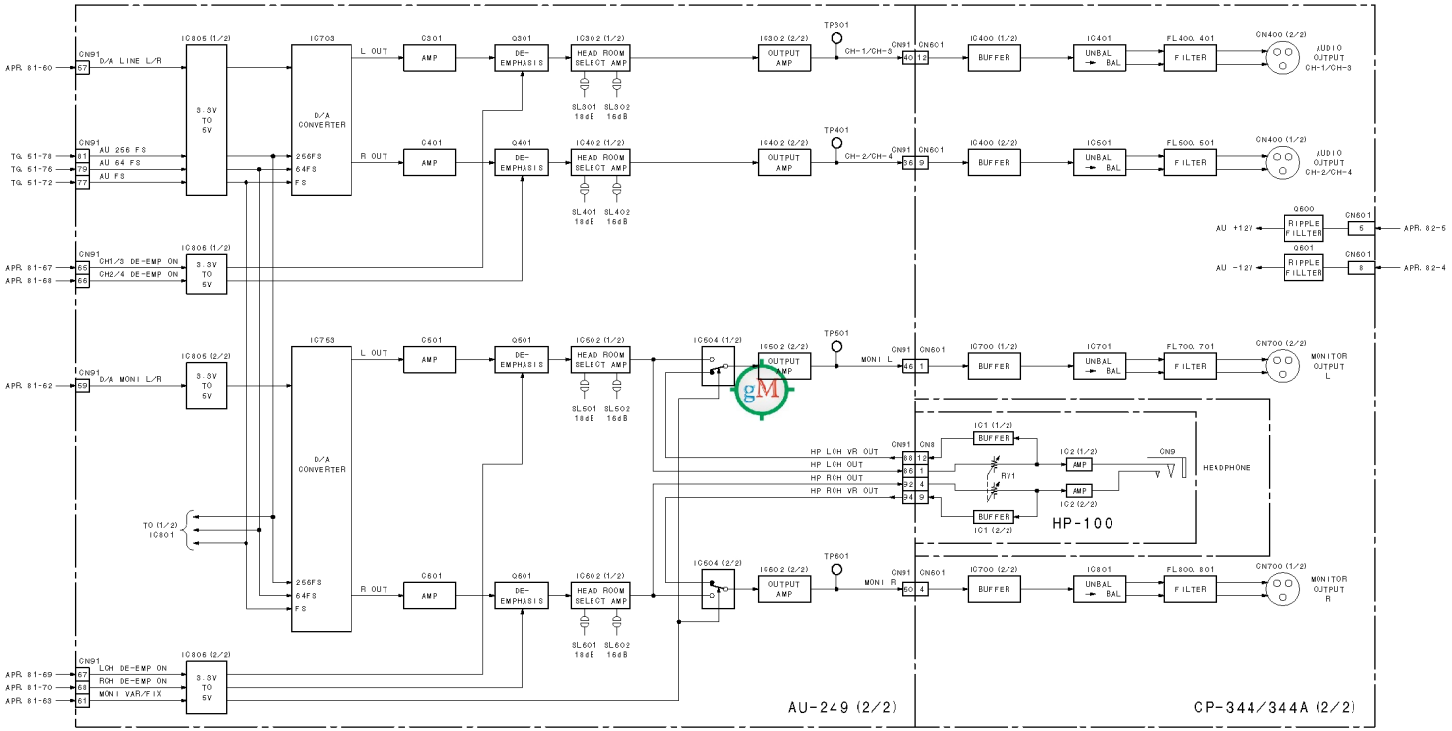

Audio A-D (Analog CH1/2 input), Audio D-A (Analog CH1/2 output)
Audio D-A (Monitor output)

AU-249 (2/2)

LOT NO. 905-

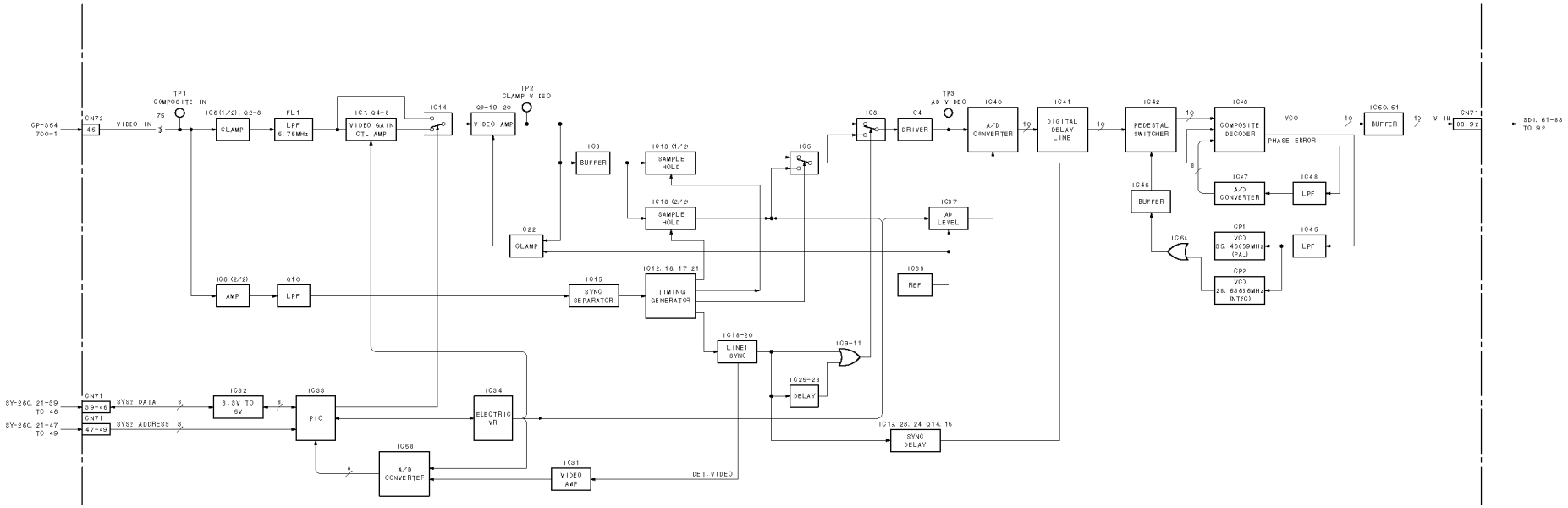

Analog composite decoder
DEC-97
LOT NO. 905-

DM-114/114P (1/3) Block diagram

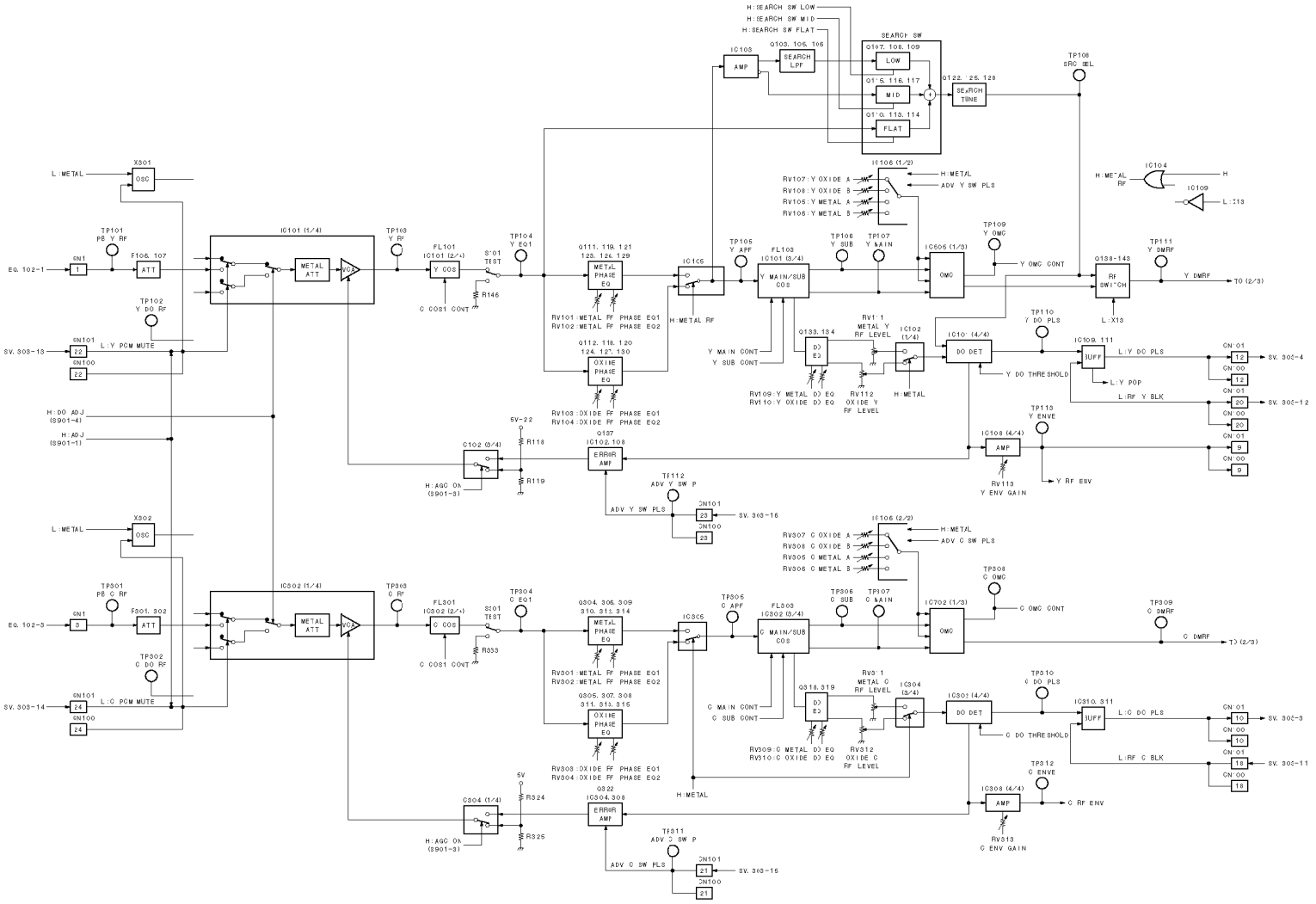

RF demodulator for analog Betacam PB, TBC

DM-114/114P (1/3)

LOT NO.905-

DM-114/114P (2/3) Block diagram

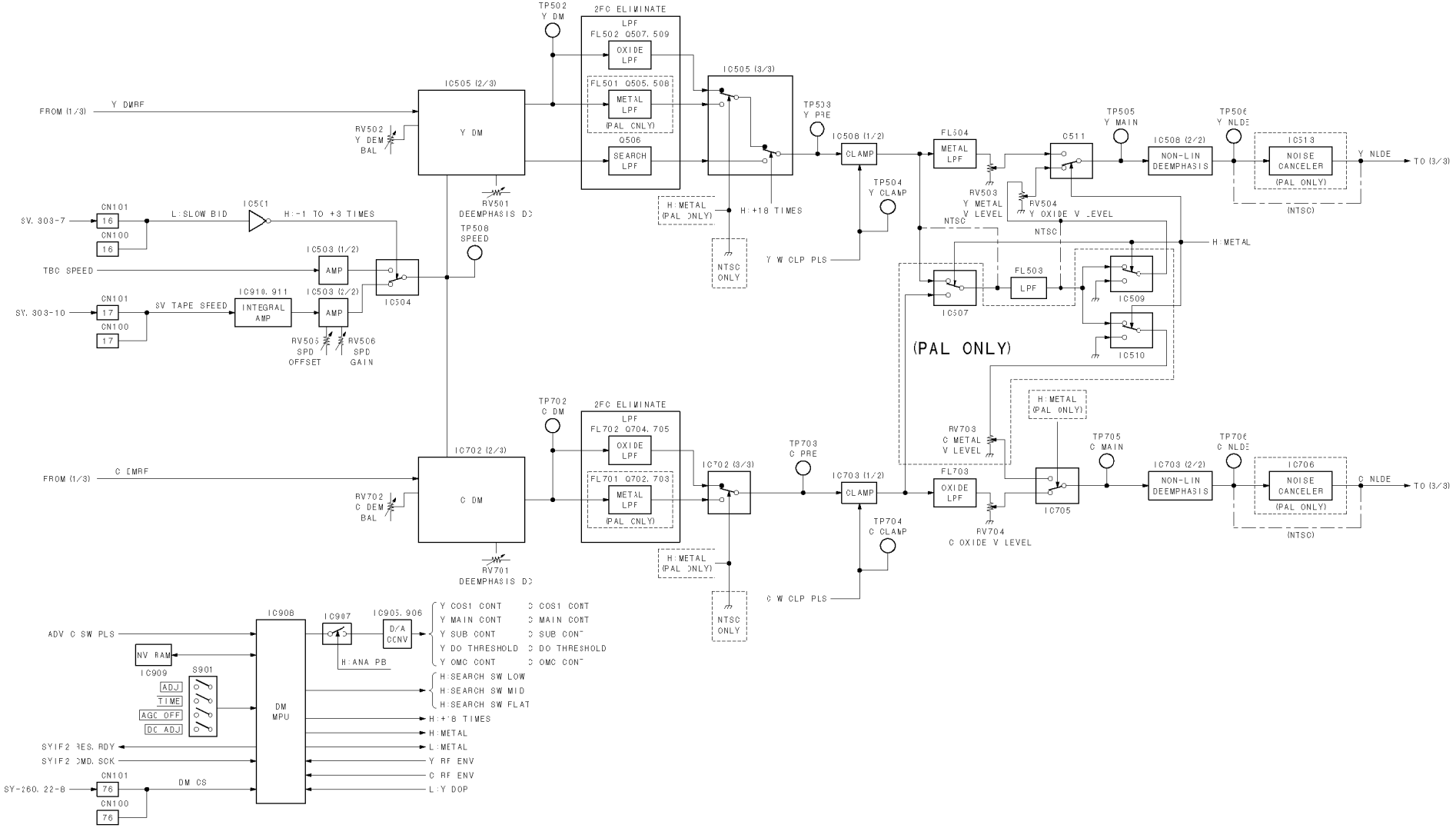

RF demodulator for analog Betacam PB, TBC

DM-114/114P (2/3)

LOT NO. 905-

DM-114/114P (3/3) Block diagram

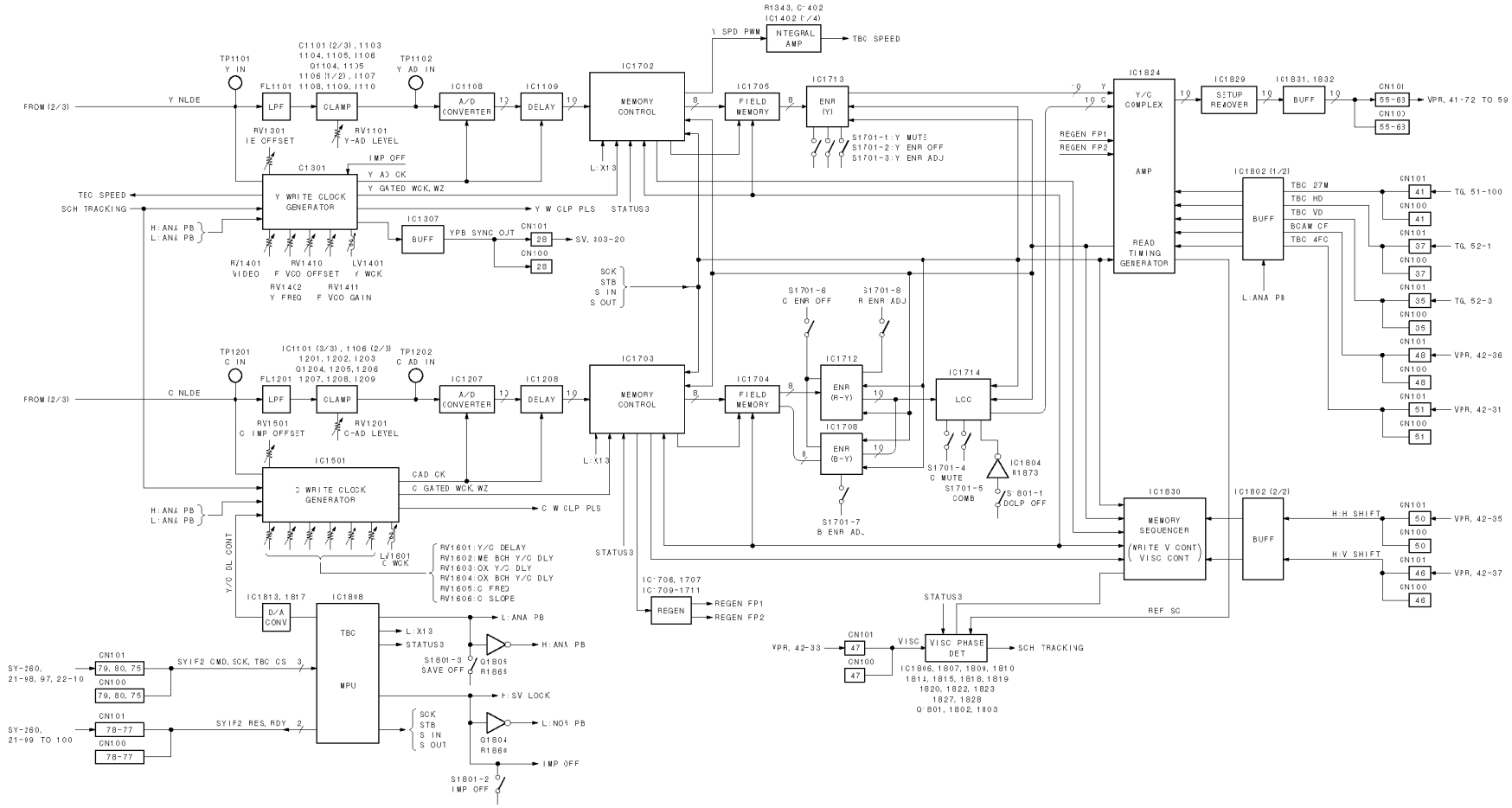

RF demodulatcr for analog Betacam PB, TBC

DM-114/114P (3/3)

LOT NO. 905-

http://getMANUAL.com

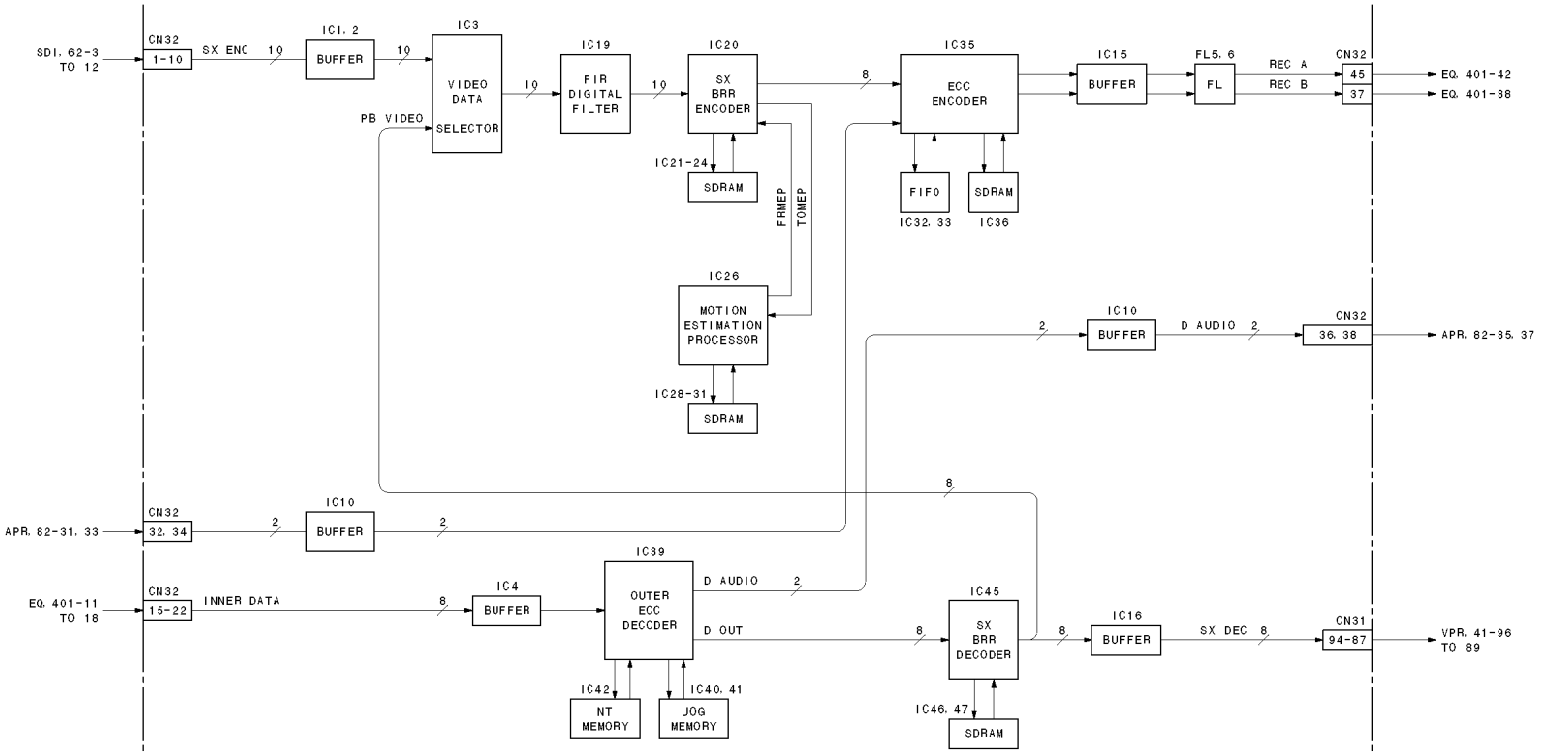

Digital data processor
Video BRR encoder/decoder
ECC encoder/decoder (Outer error correction)

DPR-87

LOT NO. 905-

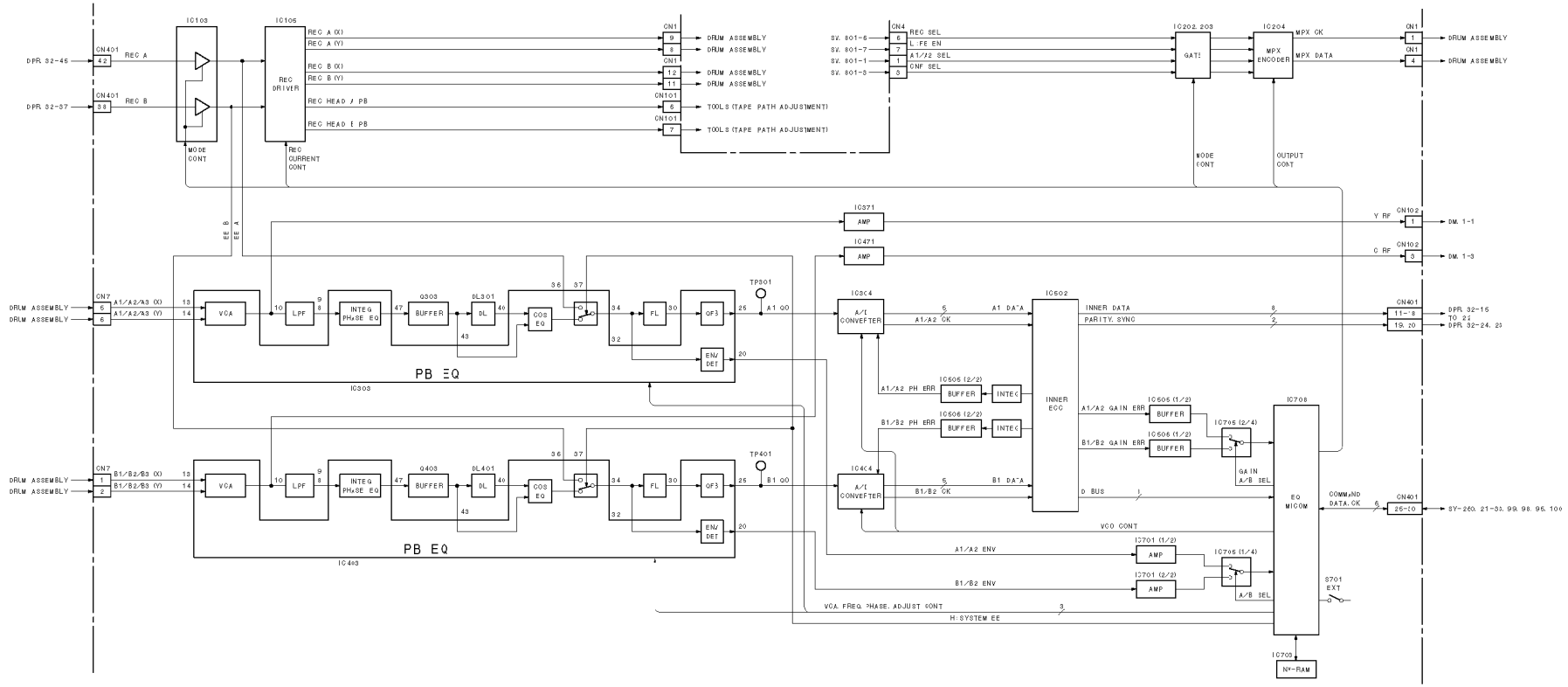

RF equalizer
REC current control, PB EQ,
Analog Betacam PB buffer Inner error correction

EQ-72

LOT NO. 905-

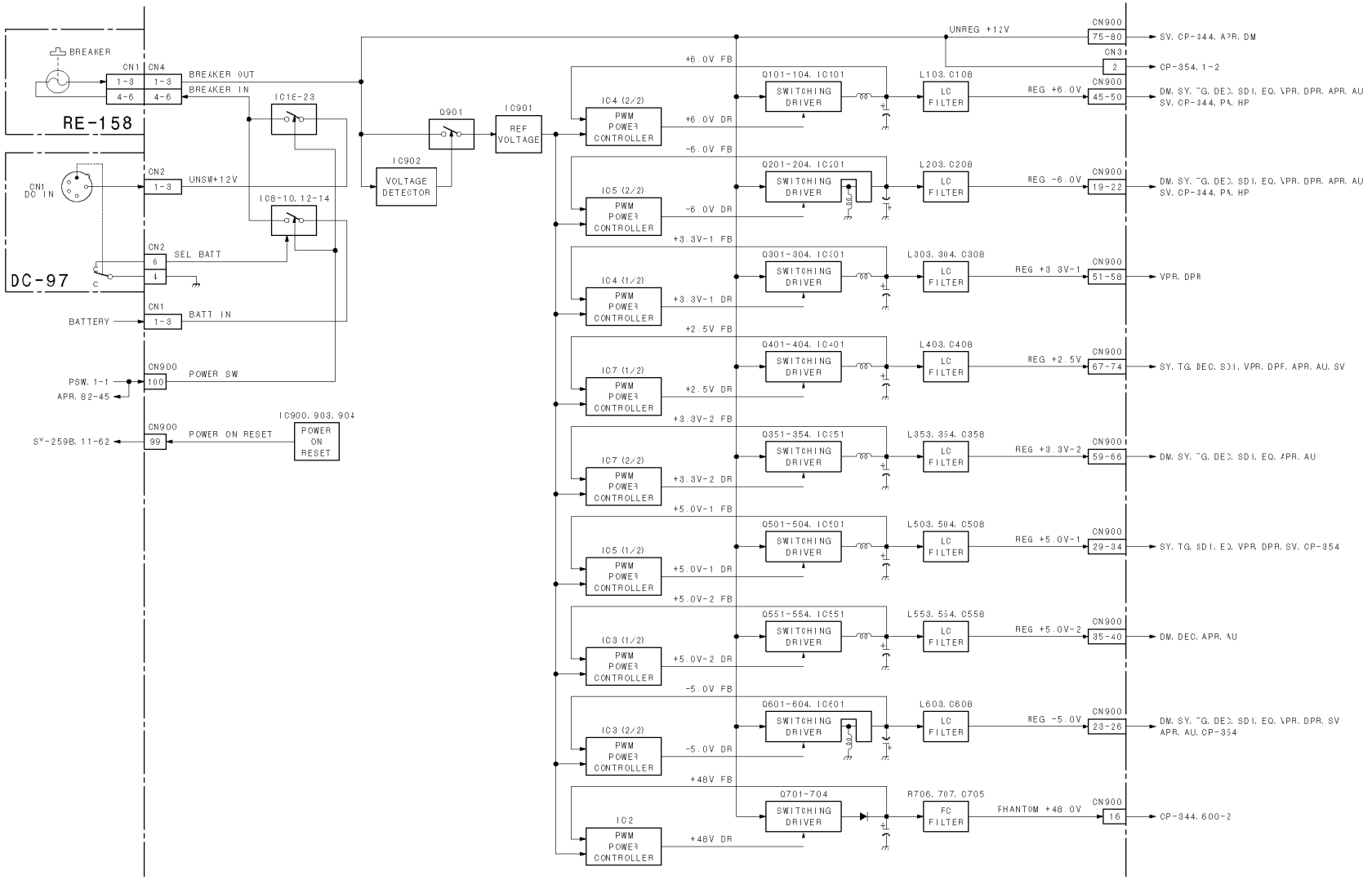

Switching regulator
RE-150
LOT NO. 905-

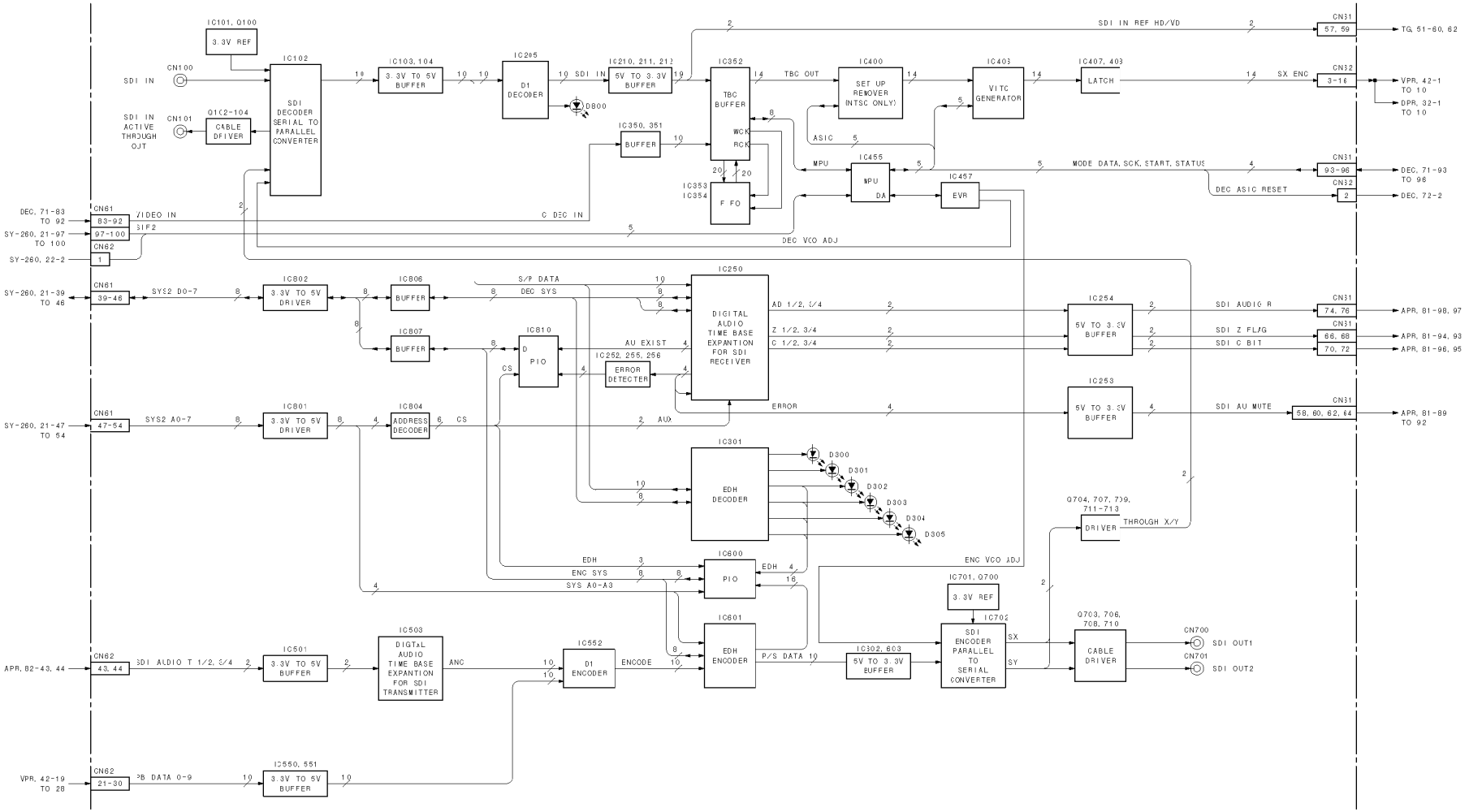

4:2:2 component serial digital interface

SDI-23

LOT NO. 905-

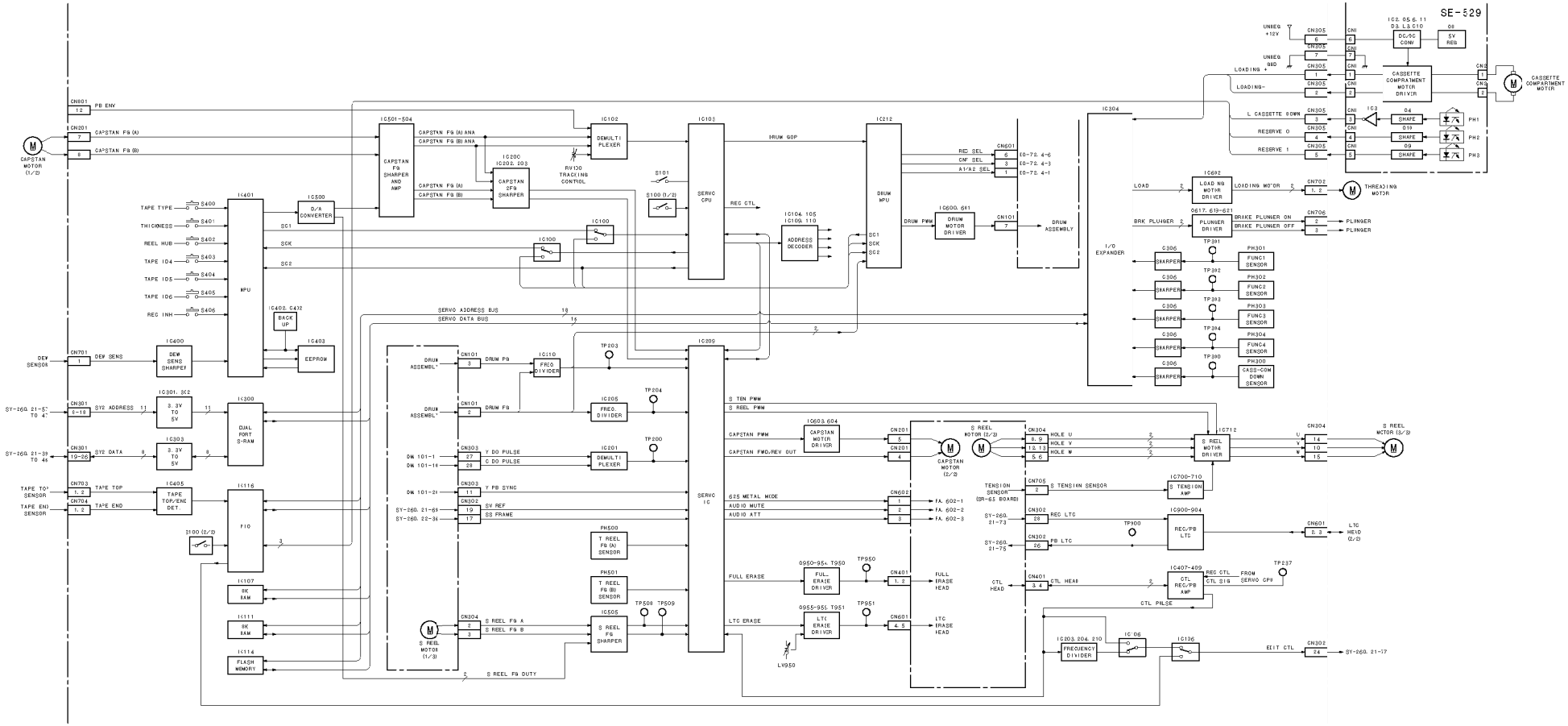

Servo control, Motor driver, Sensors

SV-194A

LOT NO. 905-

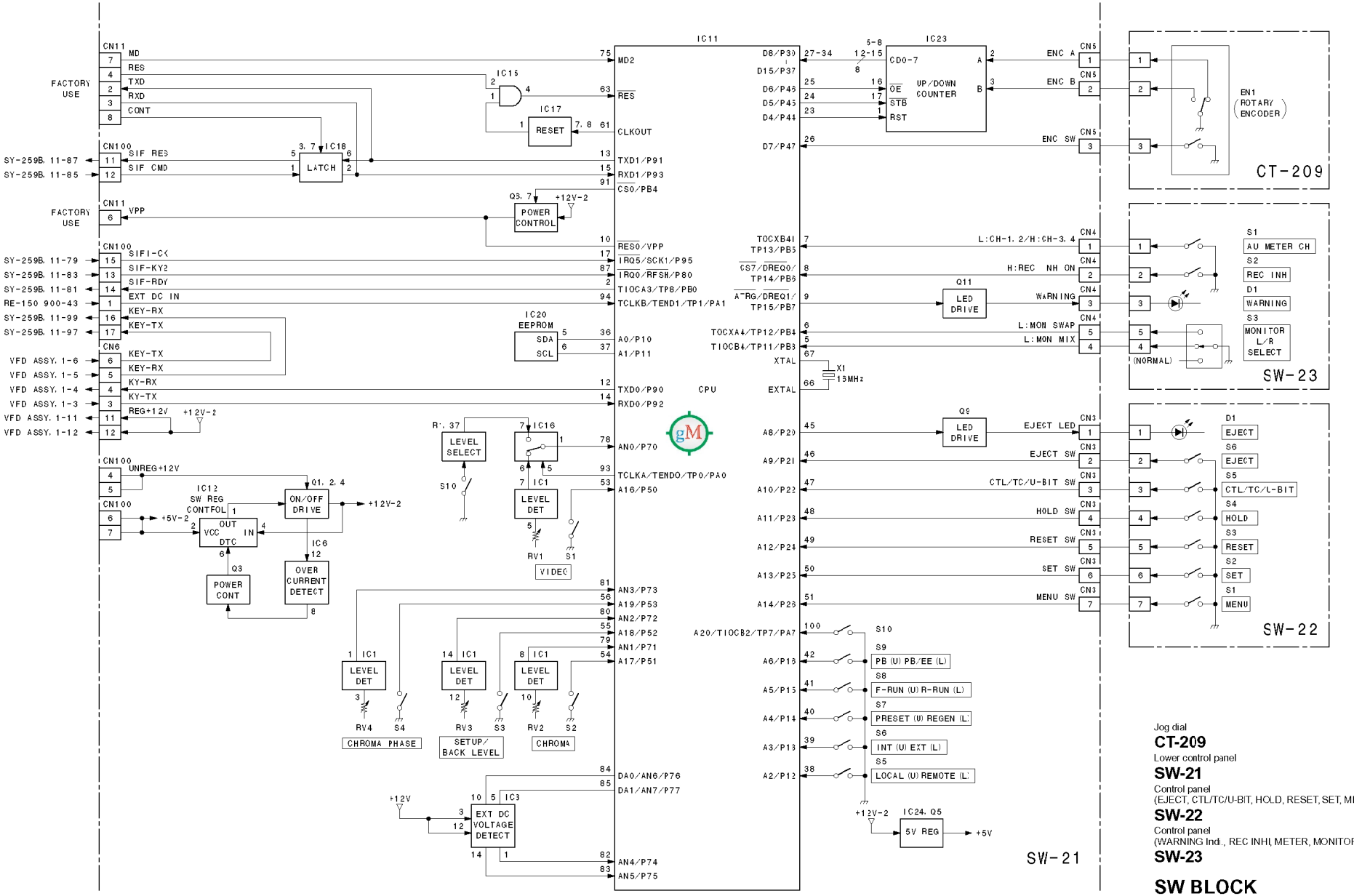

Jog dial

CT-209

Lower control panel

SW-21

Control panel
(EJECT, CTL/TC/U-BIT, HOLD, RESET, SET, MENU)

SW-22

Control panel
(WARNING Indi., REC INHI, METER, MONITOR)

SW-23

SW BLOCK

LOT NO. 905-

DNW-A28
DNW-A23P

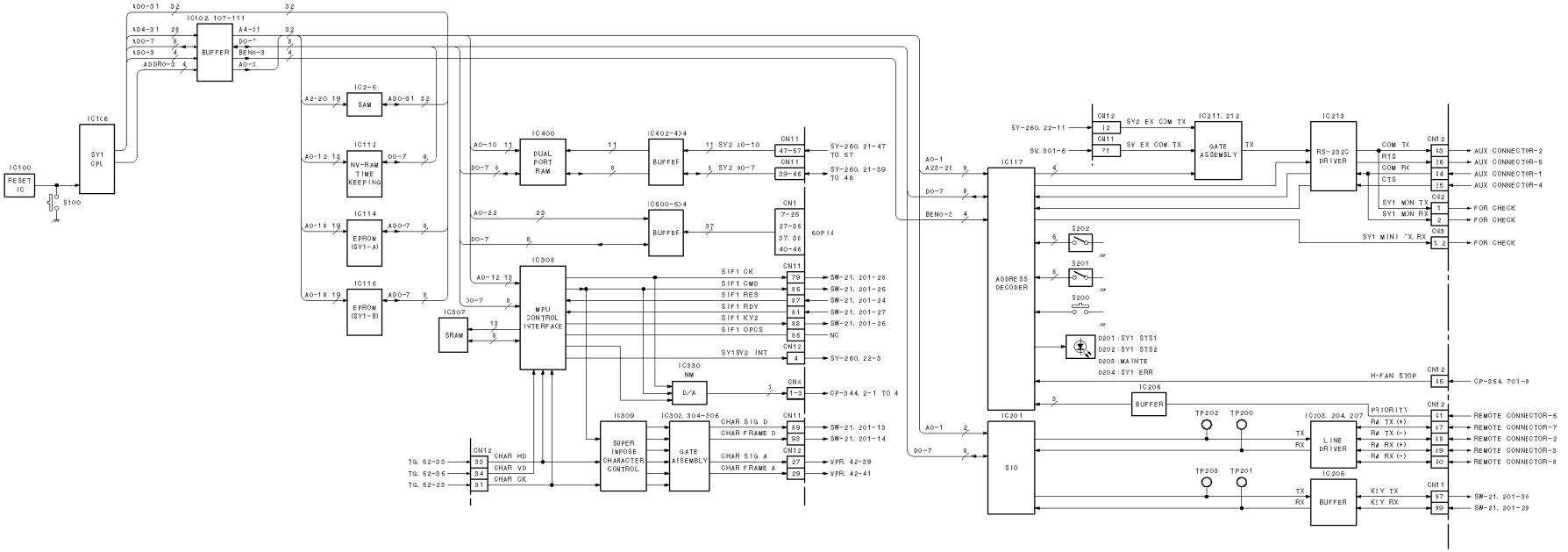

System control (SYS1)
SY-259B
LOTNO. 905-

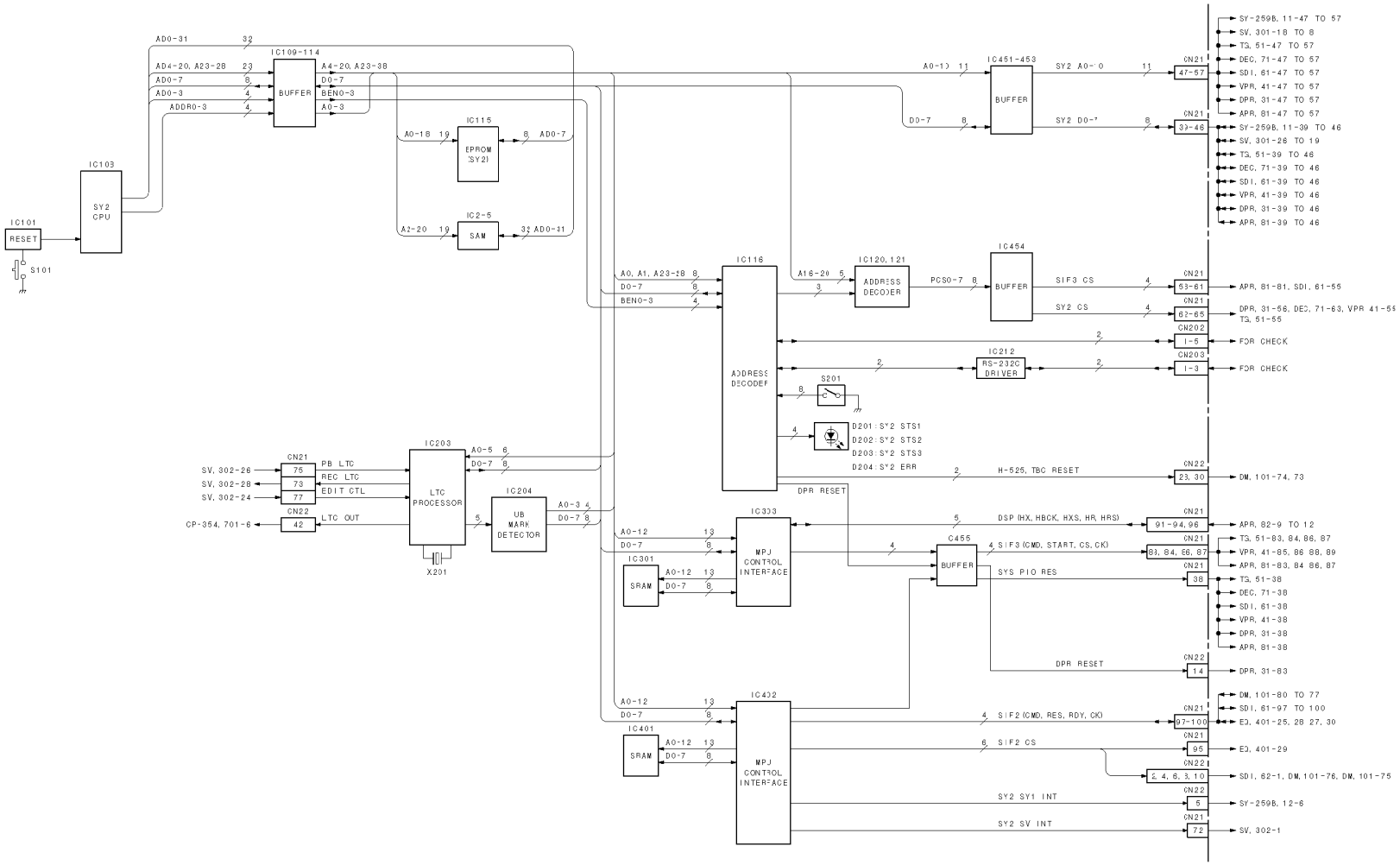

System control (SYS2)
SY-260
LOT NO. 905-

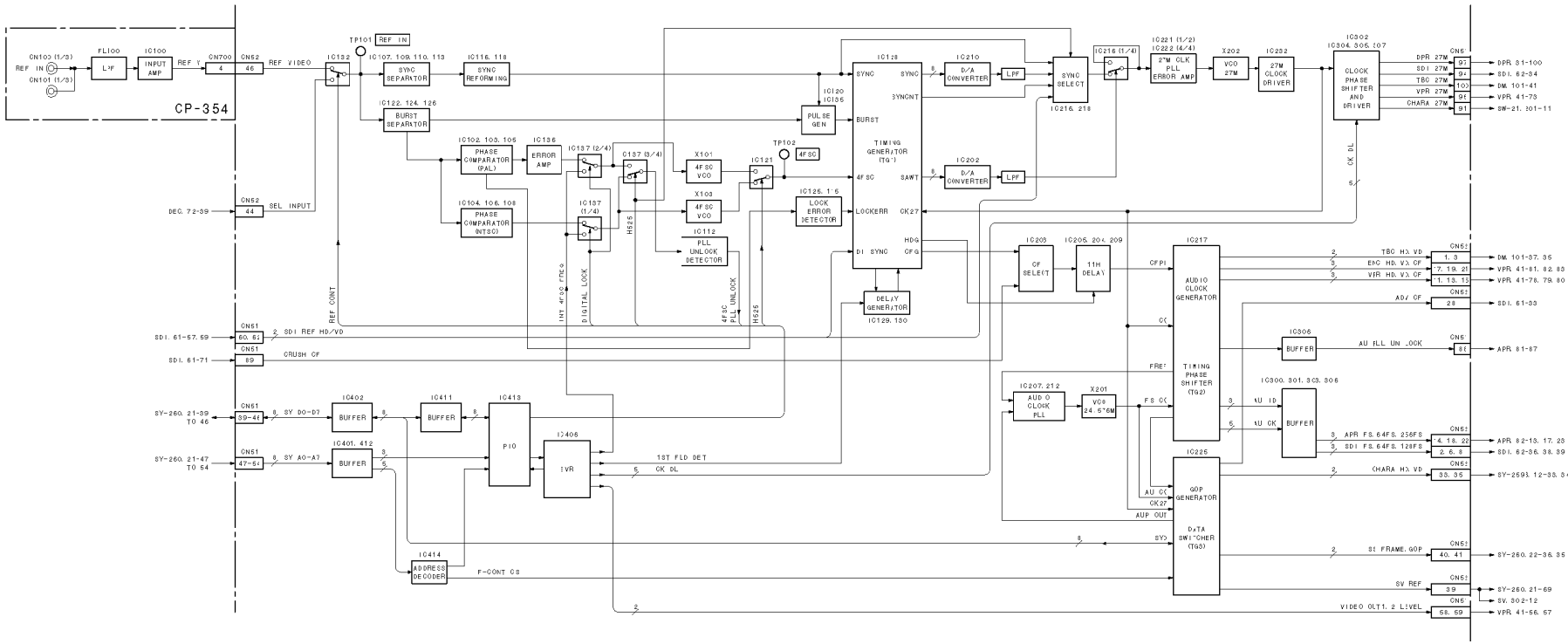

Reference timing signal and clock generator

TG-191

LOT NO. 905-

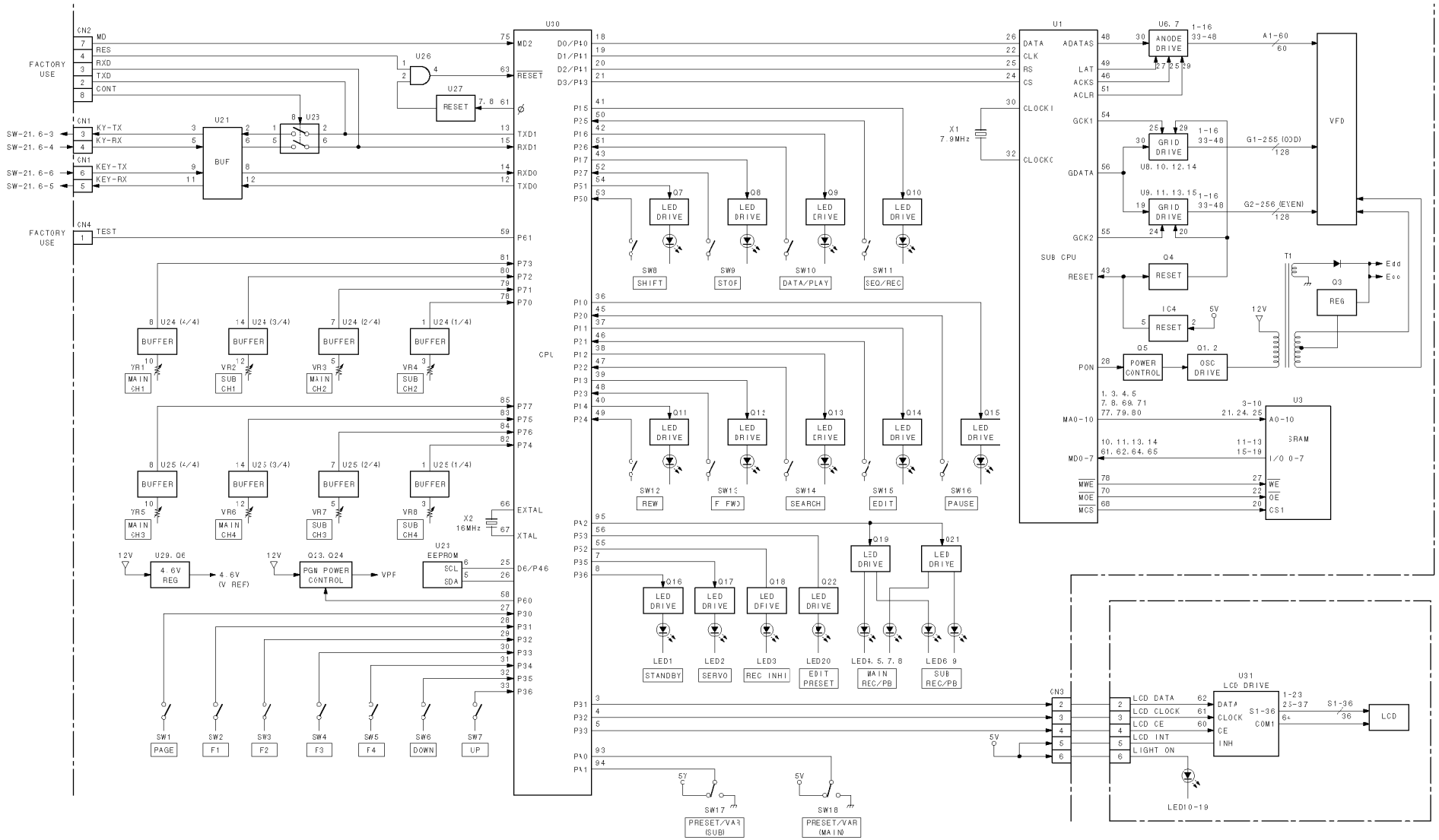

Display and function control

VFD assembly

LOT NO. 905-

http://getMANUAL.com

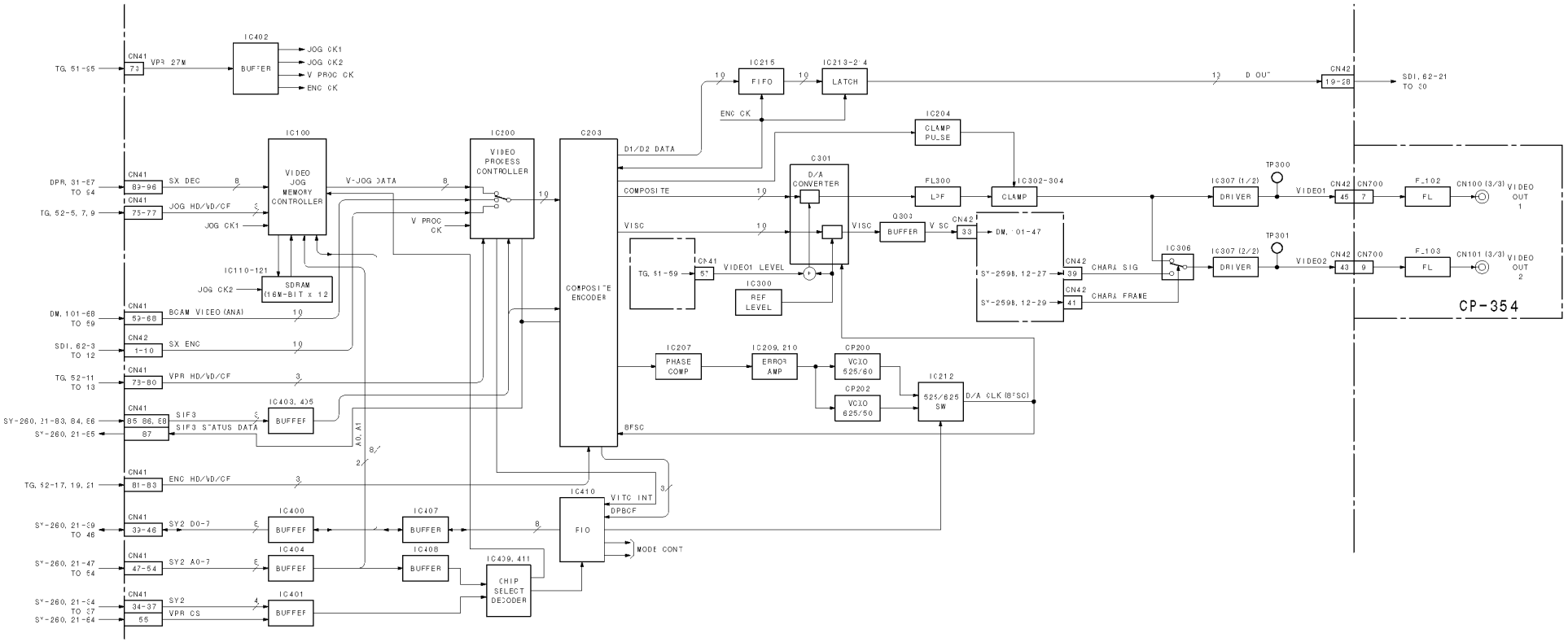

Video signal processor
Video process D-A, Composite encoder
VPR-34
LOT NO. 905-

Section 4
Schematic Diagrams

Schematic Diagram Index

		Page
A.	APR-27A	4-2
	AU-249	4-8
C.	CP-344/344A	4-16
	CP-354	4-19
	CT-209	4-148
D.	DC-97	4-149
	DEC-97	4-22
	DM-114/114P	4-26
	DPR-87	4-44
E.	EQ-72	4-56
H.	HP-100	4-64
M.	MB-757A	4-65
P.	PA-218	4-73
	PSW-72	4-149
R.	RE-150	4-75
	RE-158	4-149
S.	SDI-23	4-80
	SE-529	4-93
	SR-65	4-93
	SV-194A	4-94
	SW-21	4-108
	SW-22	4-111
	SW-23	4-111
	SY-259B	4-112
	SY-260	4-120
T.	TG-191	4-128
V.	VFD assembly	4-134
	VPR-34	4-140
Frame Wiring		4-148

System	Board	Circuit Function	Page
Digital processing	DPR-87	Digital data processor Video BRR* encoder/decoder, ECC** encoder/decoder (Outer error correction)	4-44
	SDI-23	4:2:2 component serial digital interface	4-80
Video processing	VPR-34	Video signal processor Video process D-A, Composite encoder	4-140
	DEC-97	Analog composite decoder	4-22
Analog Betacam video PB processing	DM-114 (for DNW-A28) DM-114P (for DNW-A28P)	RF demodulator for analog Betacam PB, TBC***	4-26
Audio processing	APR-27A	Audio signal processor	4-2
	AU-249	Audio A-D (Analog CH1/2 input), Audio D-A (Analog CH1/2 output) Audio D-A (Monitor output)	4-8
	PA-218	Head amplifier for analog Betacam PB	4-73
RF processing	EQ-72	RF equalizer REC current control, PB EQ, Analog Betacam PB buffer Inner error correction	4-56
Timing generator	TG-191	Reference timing signal and clock generator	4-126
System control	SY-259B	System control (SYS1)	4-112
	SY-260	System control (SYS2)	4-120
Motor driver/sensor	SV-194A	Servo control, Motor driver, Sensors	4-94
	SR-65	S tension sensor	4-93
Front panel	SW-21	Lower control panel	4-108
	SW-22	Control panel (EJECT, CTL/TC/U-BIT, HOLD, RESET, SET, MENU)	4-111
	SW-23	Control panel (WARNING Indi., REC INHI, METER, MONITOR)	4-111
	CT-209	Jog dial	4-149
	VFD assembly	Display and function control	4-134
Connector panel	CP-344 (for SY) CP-344A (for J)	Connector board (AUDIO/MONITOR system), select switch and audio amplifier (AUDIO INPUT/OUTPUT, MONITOR OUTPUT)	4-16
	CP-354	Connector board (VIDEO/REMOTE/SDI/DC/TC system), select switch and amplifier (VIDEO INPUT/OUTPUT, REMOTE, SDI IN/OJT, DC OUT, TC IN/OUT)	4-19
	DC-97	DC IN terminal board	4-149
Power	RE-150	Switching regulator	4-75
	RE-158	Breaker	4-149
Others	MB-757A	Motherboard	4-65
	HP-100	Headphones jack	4-64
	PSW-72	Power switch	4-149
	SE-529	Cassette compartment	4-93

*BRR: Bit Rate Reduction **ECC: Error Correction Coding ***TBC: Time Base Corrector

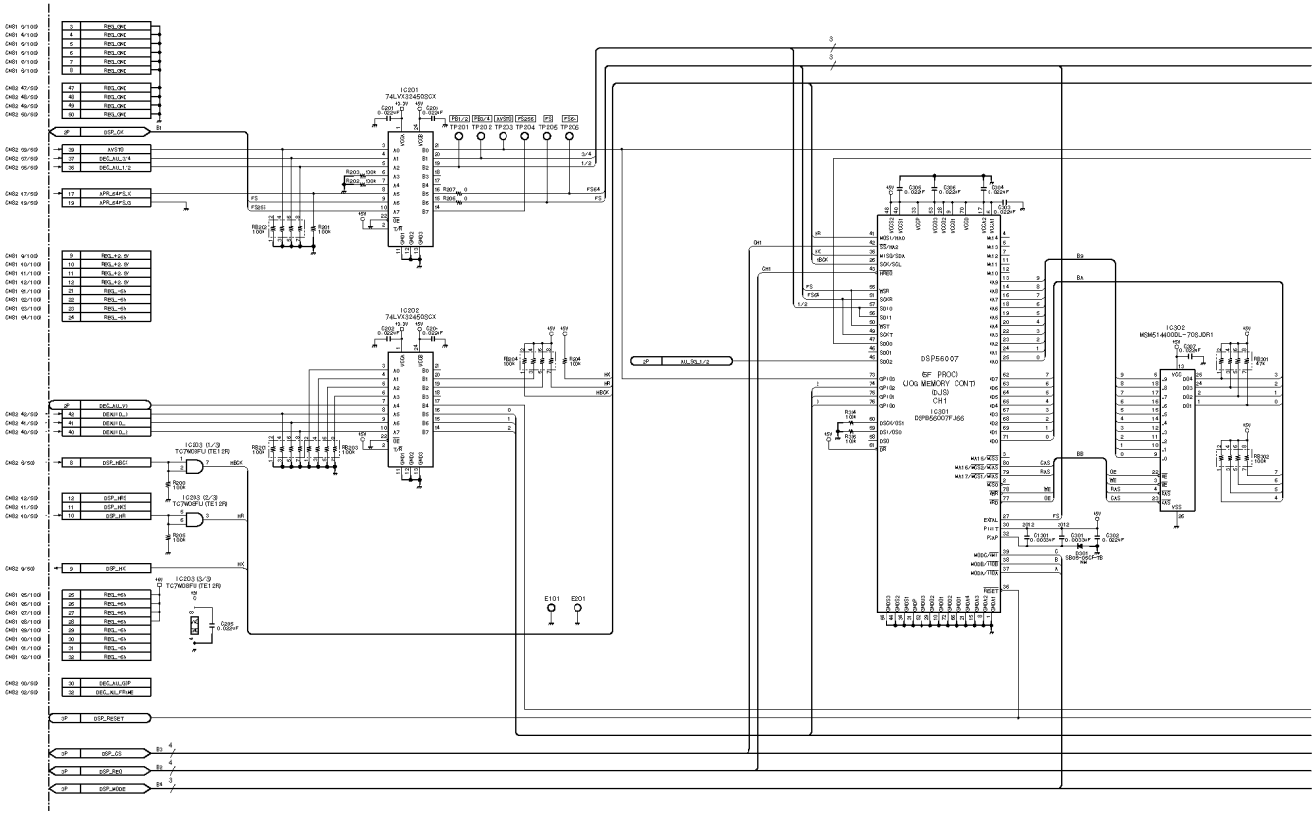

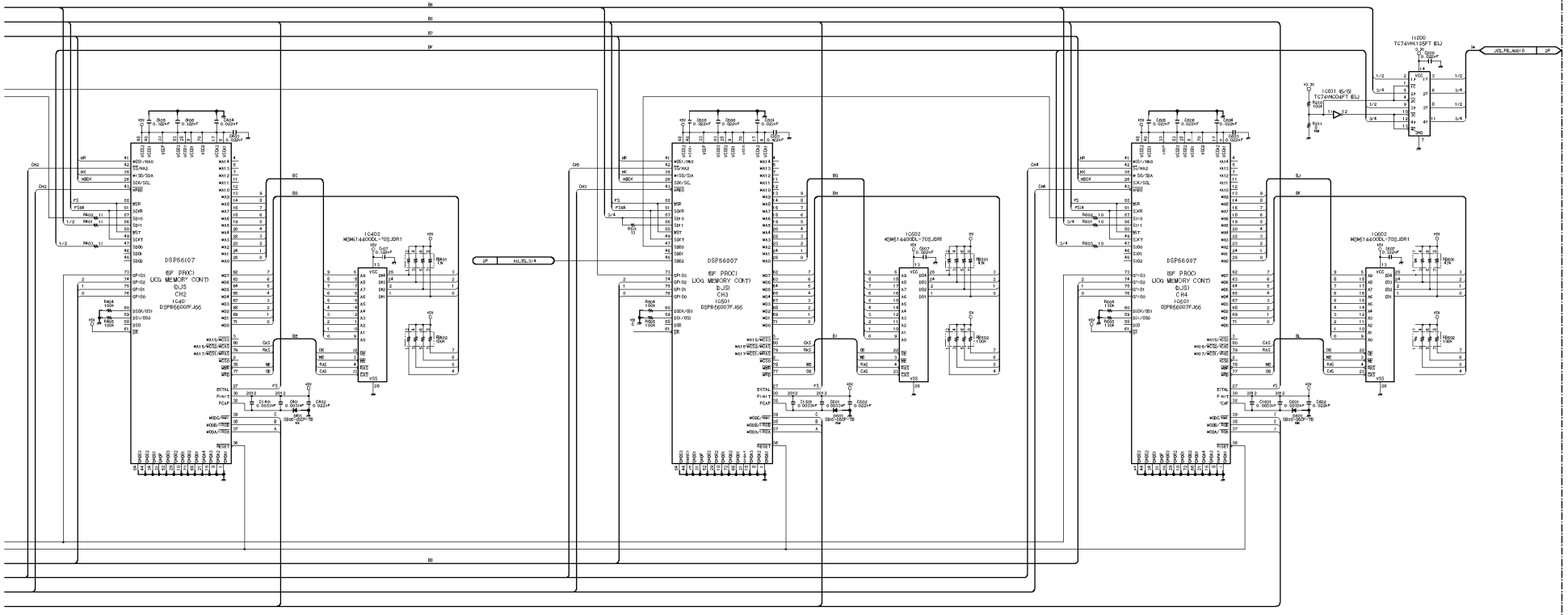

Audio signal processor

APR-27A (1/3)

BOARD NO. 1-667-465-12

LOT NO. 905-

DNW-A220_APR-27_012

APR-27A (2/3)

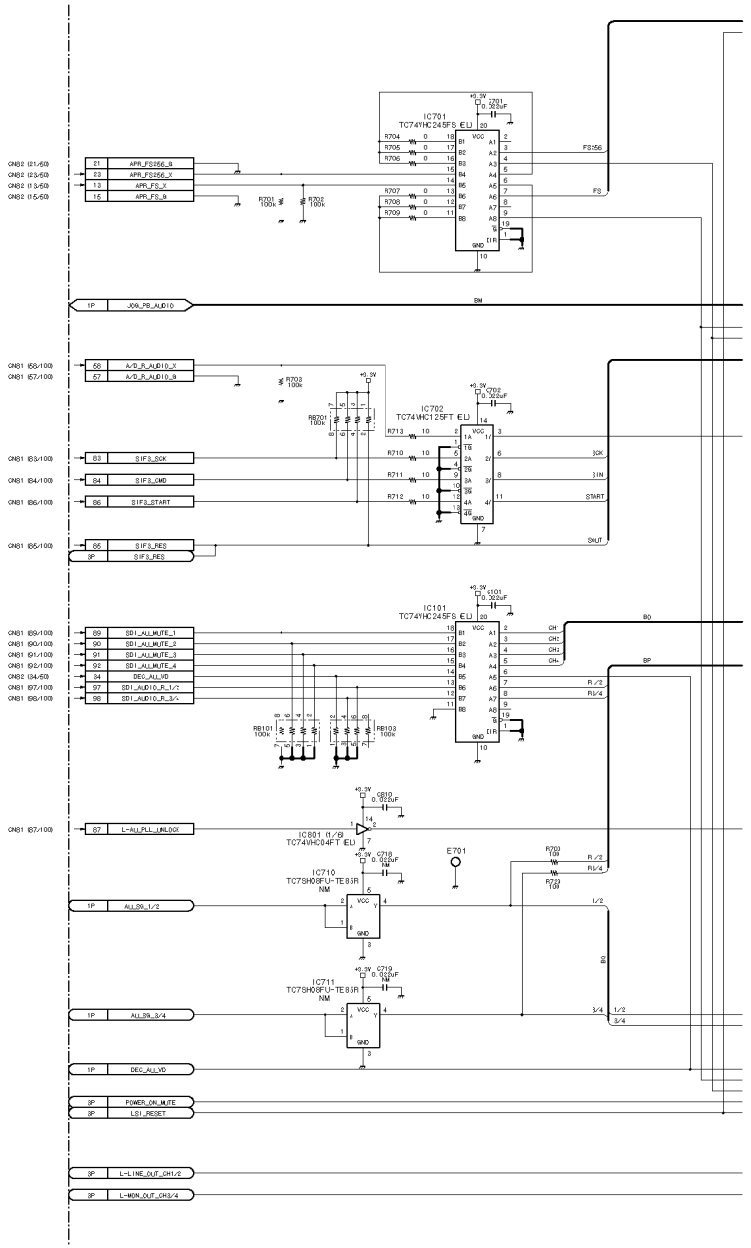
IC701
TC74VHC245FS EL
IC702
TC74VHC125FT EL
IC101
TC74VHC245FS EL
IC801 (1/3)
TC74VHC04FT EL
IC710
TC7SH08FU-TE85R
NM
IC711
TC7SH08FU-TE85R
NM
E701
APR_FS256_B
APR_FS256_X
APR_FS_X
APR_FS_B
FS256
FS
JVA_FB_AUD10
A/D_R_AUD10_X
A/D_R_AUD10_B
SIF3_SCK
SIF3_CMD
SIF3_START
SIF3_RES
SHUT
SDI_AU_MUTE_1
SDI_AU_MUTE_2
SDI_AU_MUTE_3
SDI_AU_MUTE_4
DEC_AU_VD
L-AU_PLL_UNLOCK
ALL28_1/2
ALL28_3/4
POWER_ON_MUTE
LSI_RESET
L-LINE_OUT_CH1/2
L-MON_OUT_CH3/4

4-4

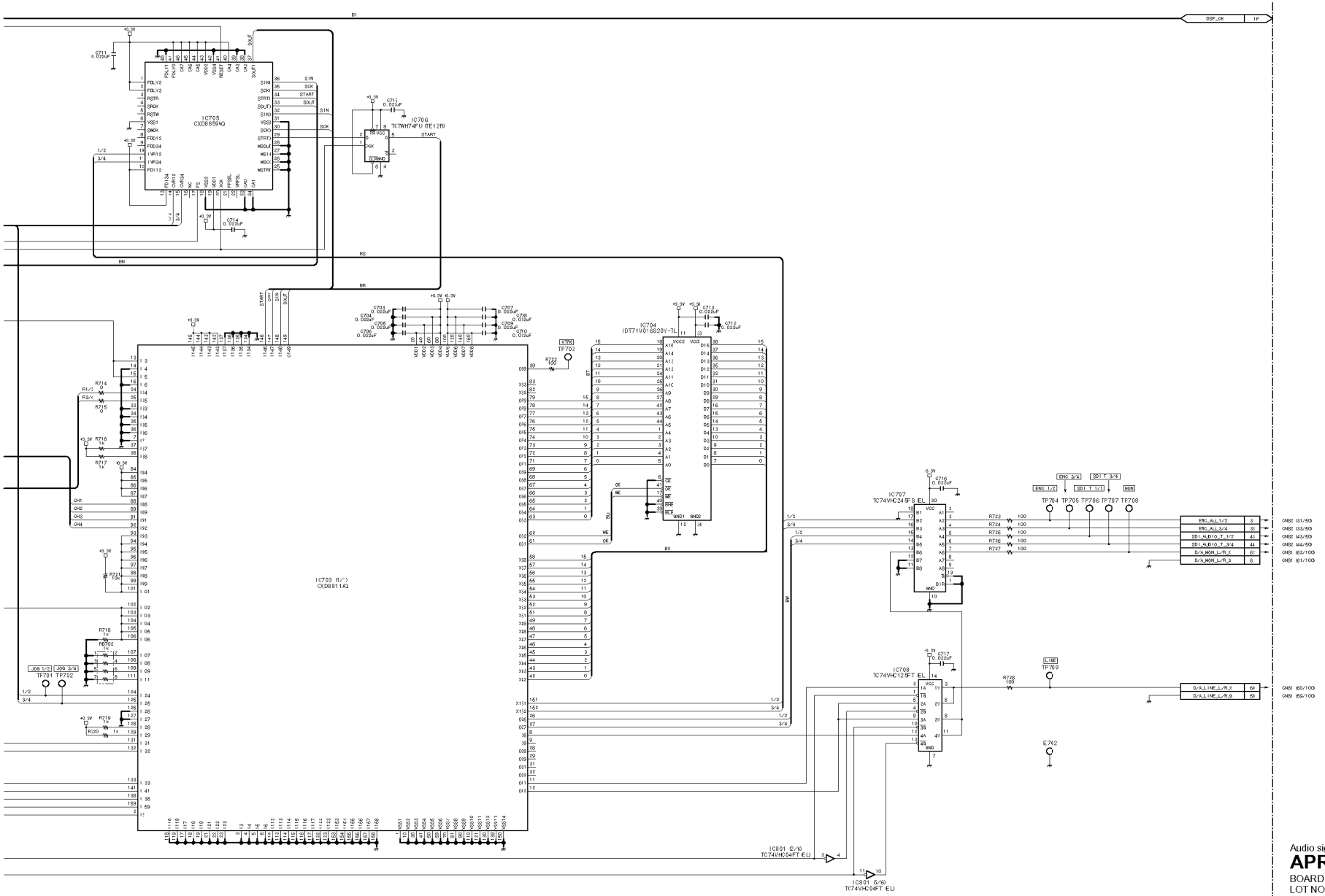

Audio signal processor

APR-27A (2/3)

BOARD NO. 1-667-465-12

LOT NO. 905-

DNW-A220_APR-27_012

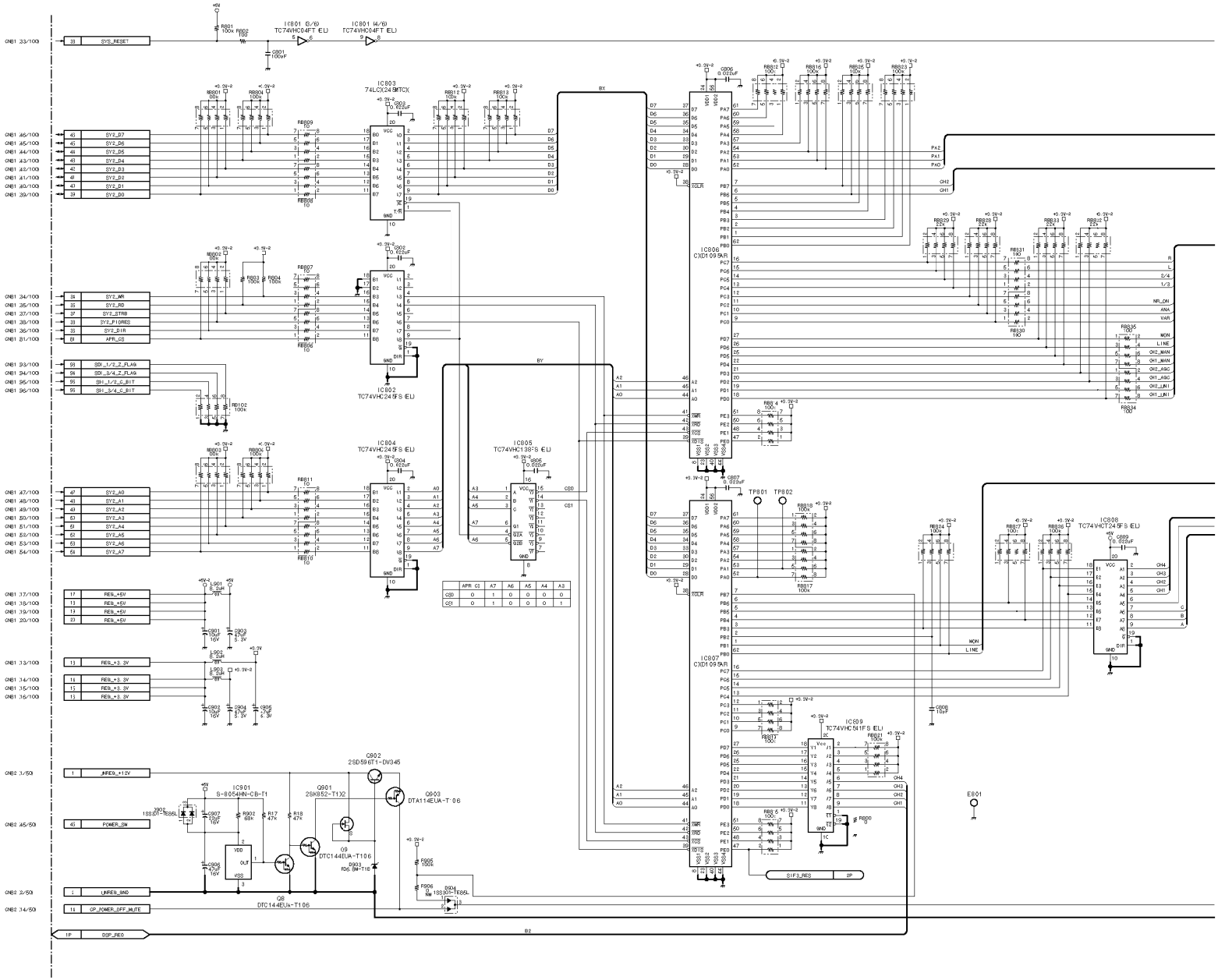

APR-27A (3/3)

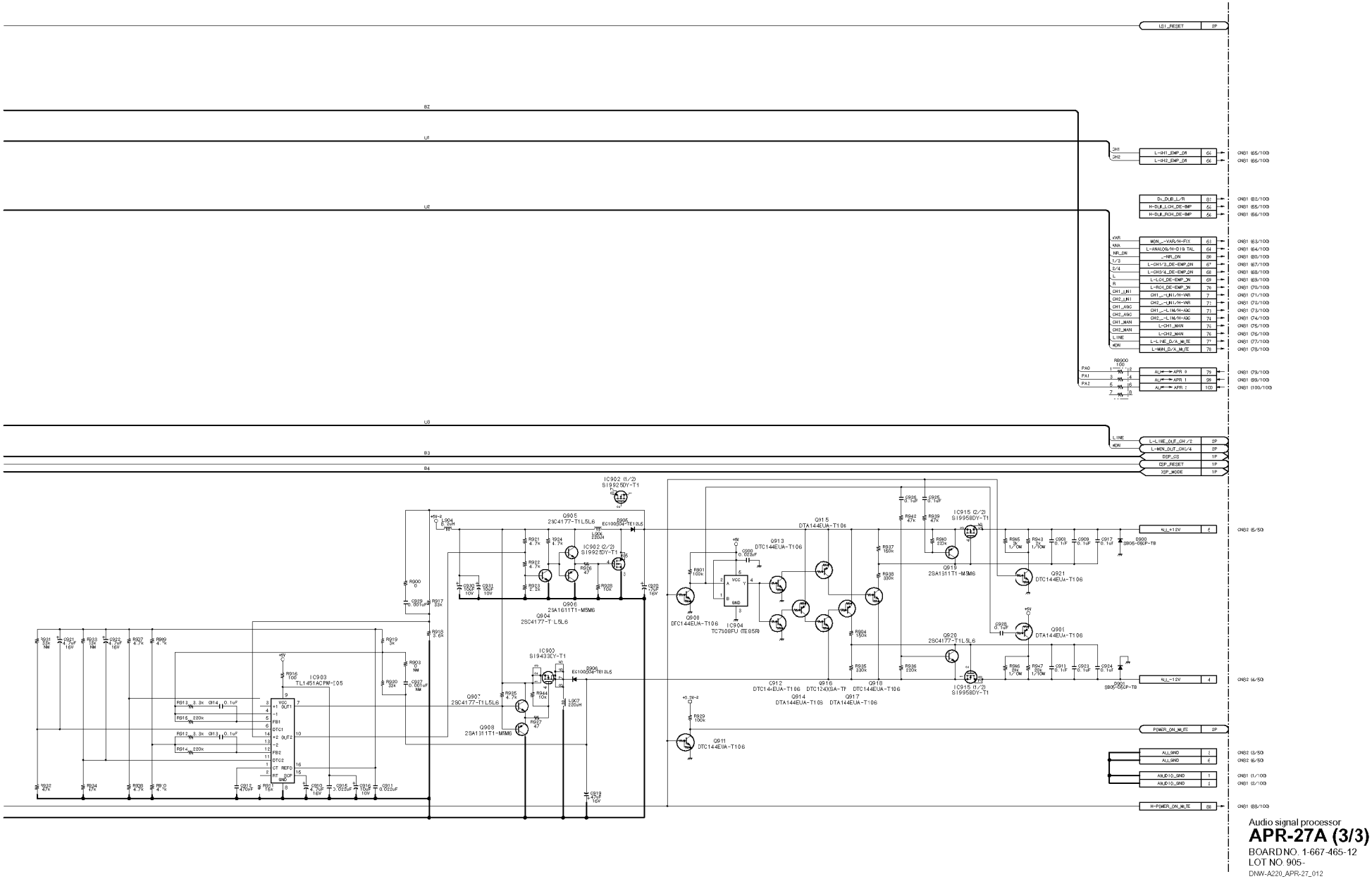

Audio signal processor

APR-27A (3/3)

BOARD NO. 1-667-465-12

LOT NO. 905-

DNW-A220_APR-27_012

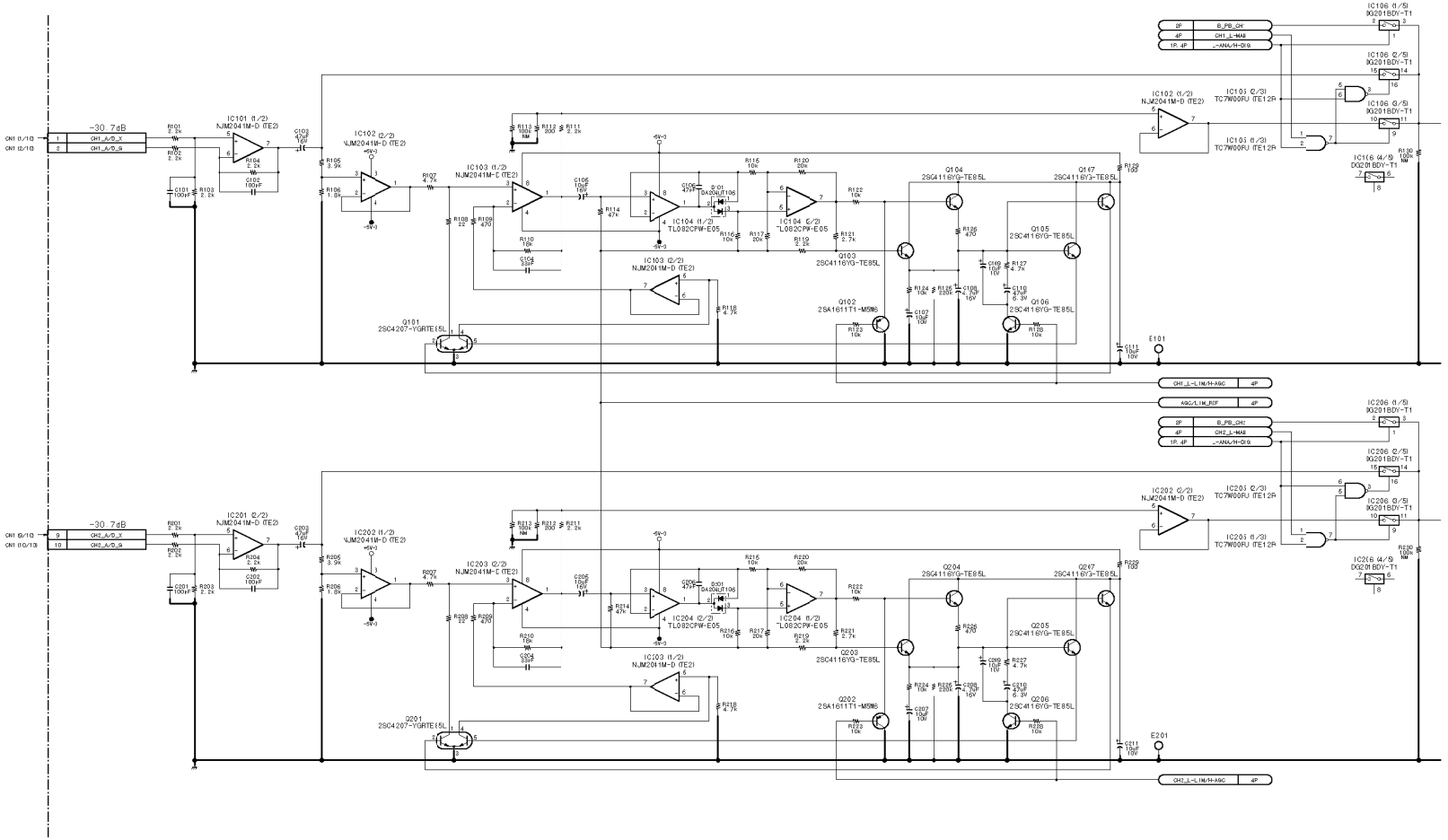

http://getMANUAL.com

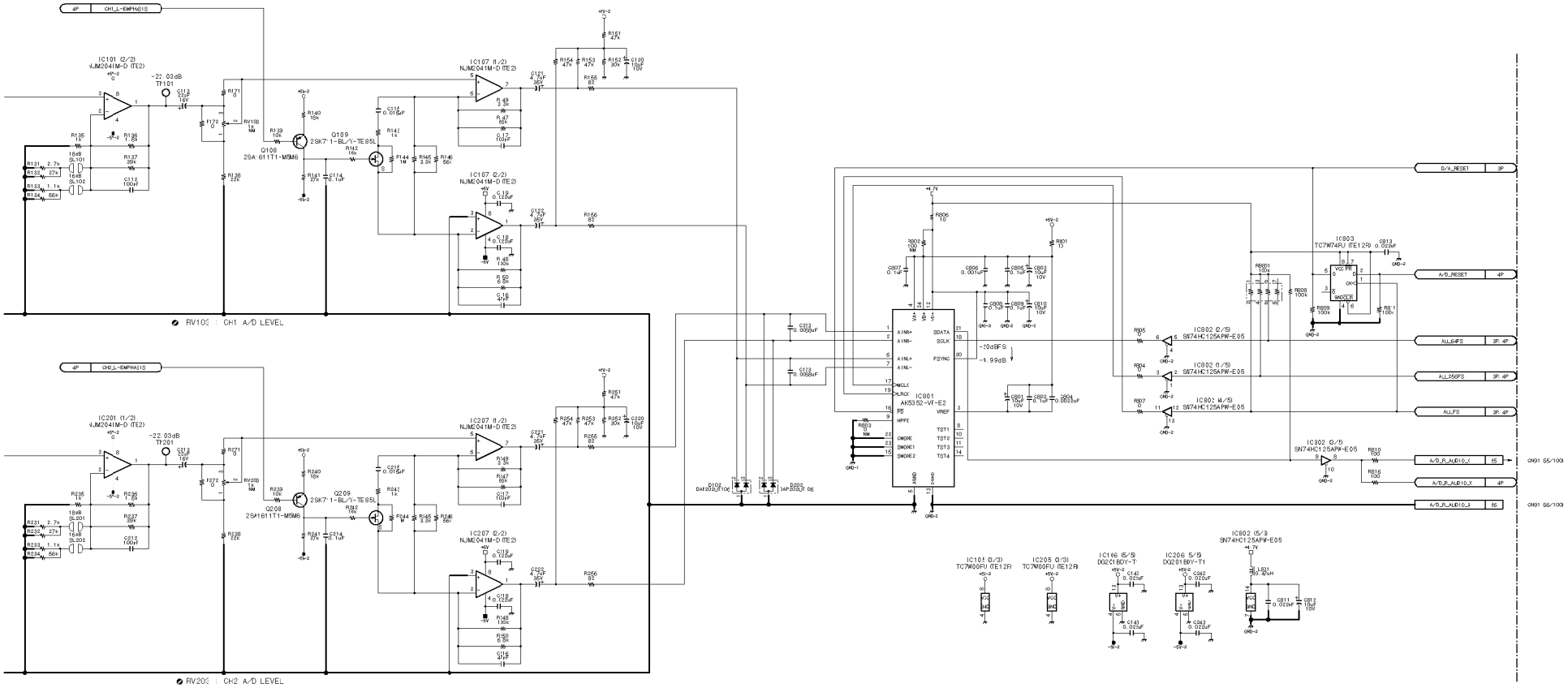

Audio A-D (Analog CH1/2 input), Aucio D-A (Analog CH1/2 output)
Audio D-A (Monitor output)

AU-249 (1/4)

BOARD NO. 1-667-466-13
LOT NO. 905-
DNW-A220_AU-249_013

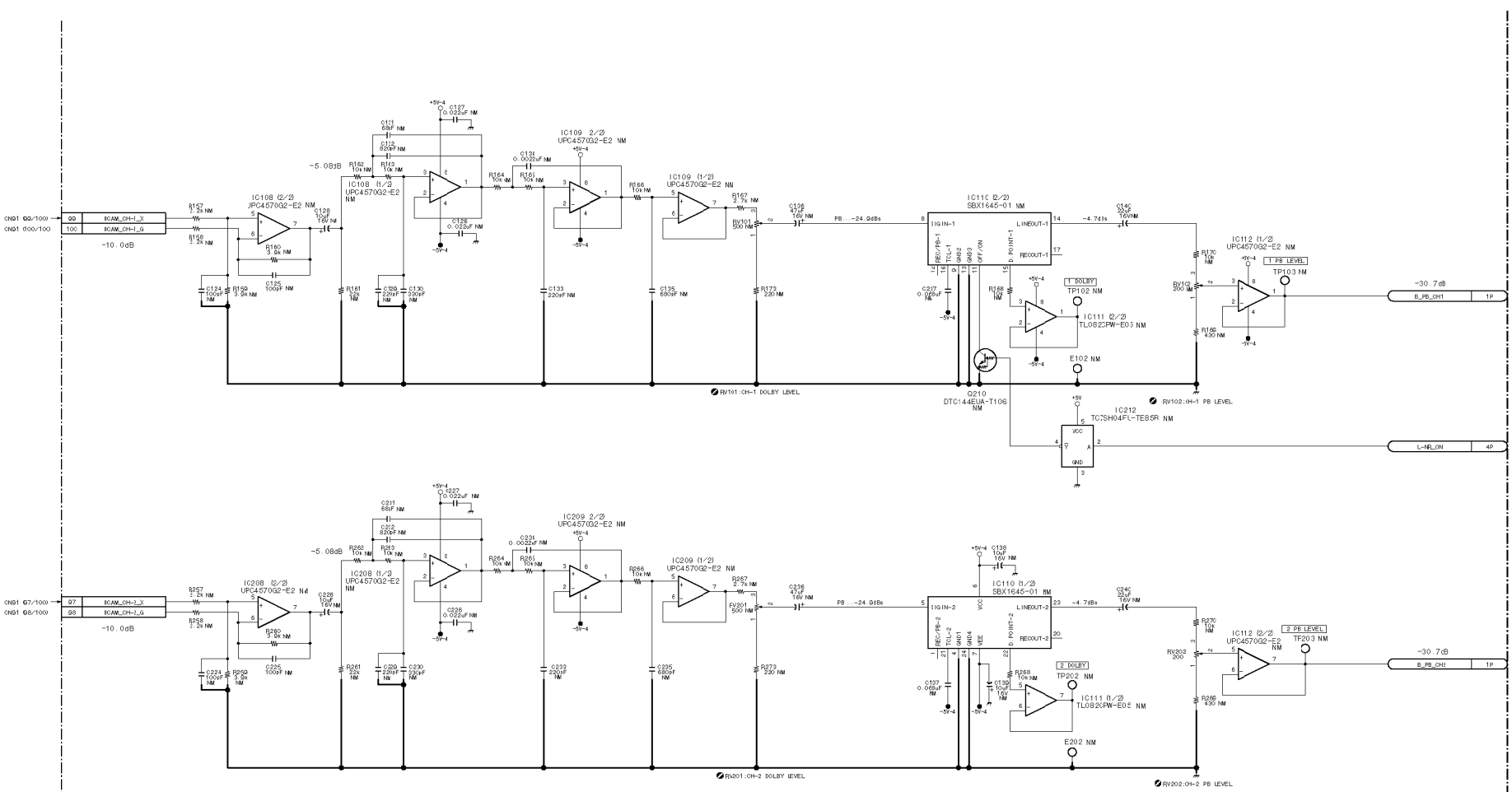

Audio A-D (Analog CH1/2 input), Audio D-A (Analog CH1/2 output)
Audio D-A (Monitor output)

AU-249 (2/4)

BOARD NO. 1-667-466-13
LOT NO. 905-
DNW-A220_AU-249_013

AU-249 (3/4)

R703 R753	R701 R751	
. NM	0	16 bit atotum»
. NM	. NM	20 bit atotum»
0	. NM/0	maetsume

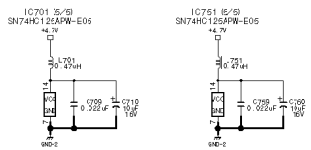

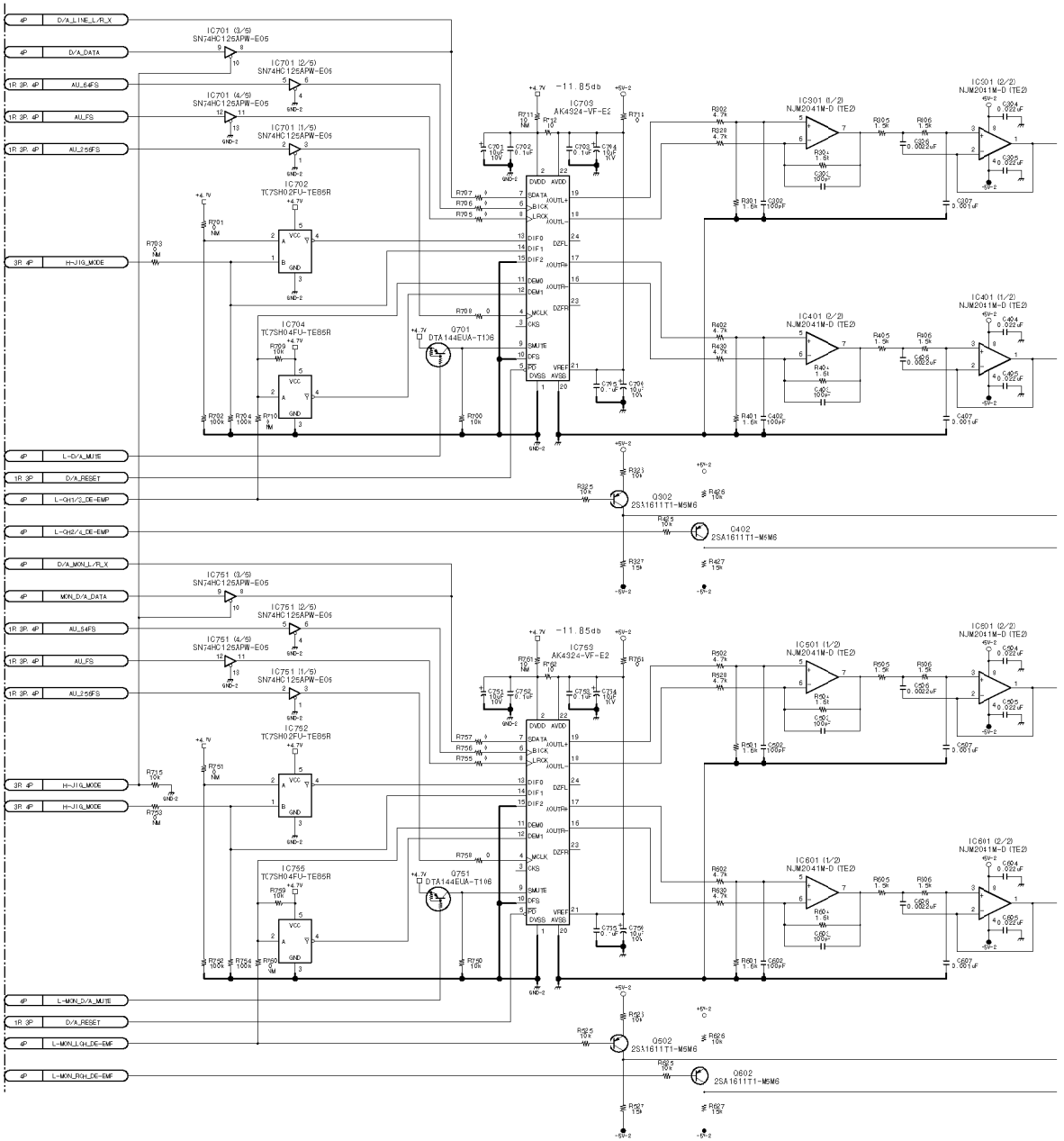

4-12

DNW-A28
DNW-A23P

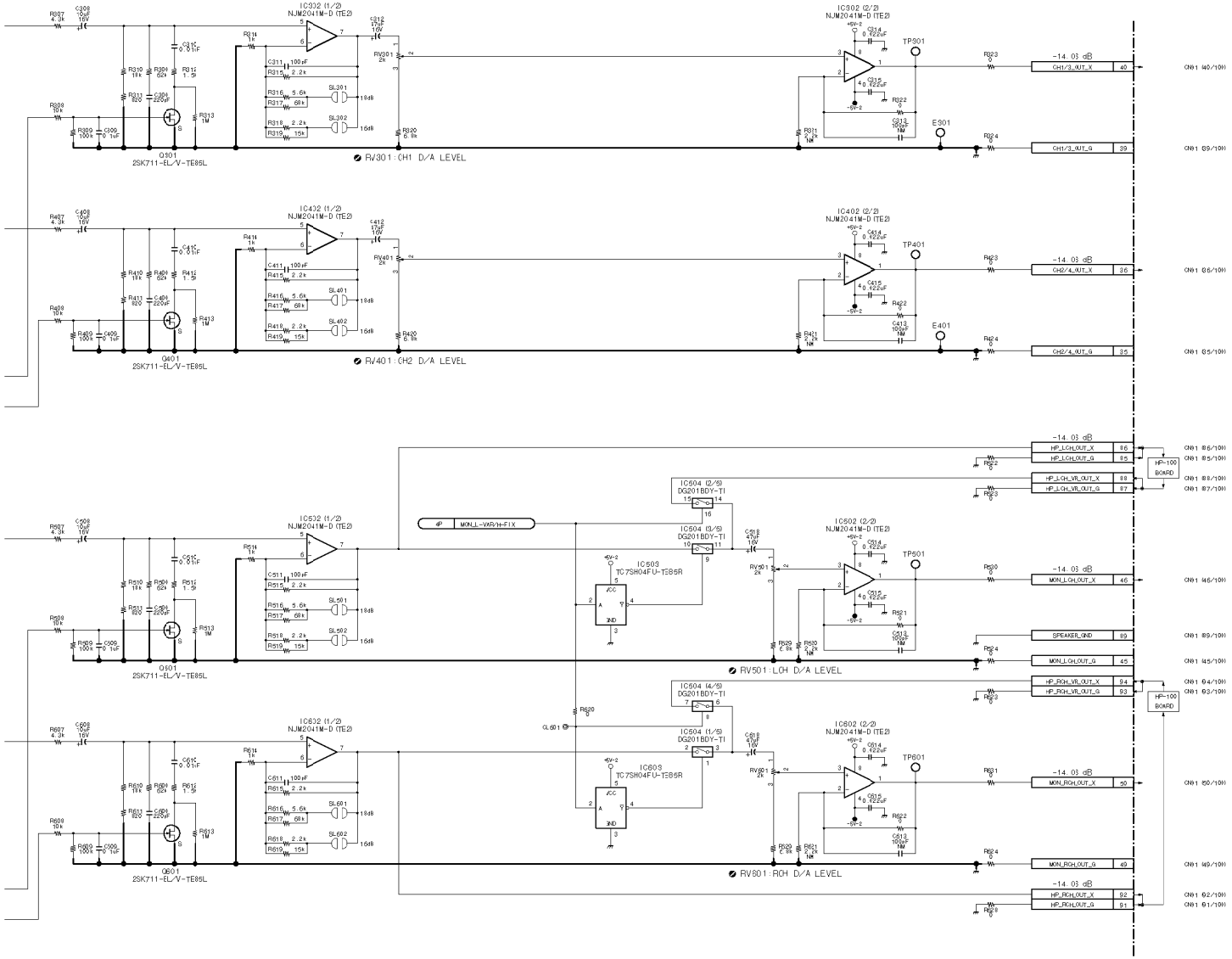

Audio A-D (Analog CH1/2 input), Audio D-A (Analog CH1/2 output)
Audio D-A (Monitor output)

AU-249 (3/4)

BOARD NO. 1-667-466-13
LOT NO. 905-

DNW-A22(_AU-249_013

DNW-A28
DNW-A28P

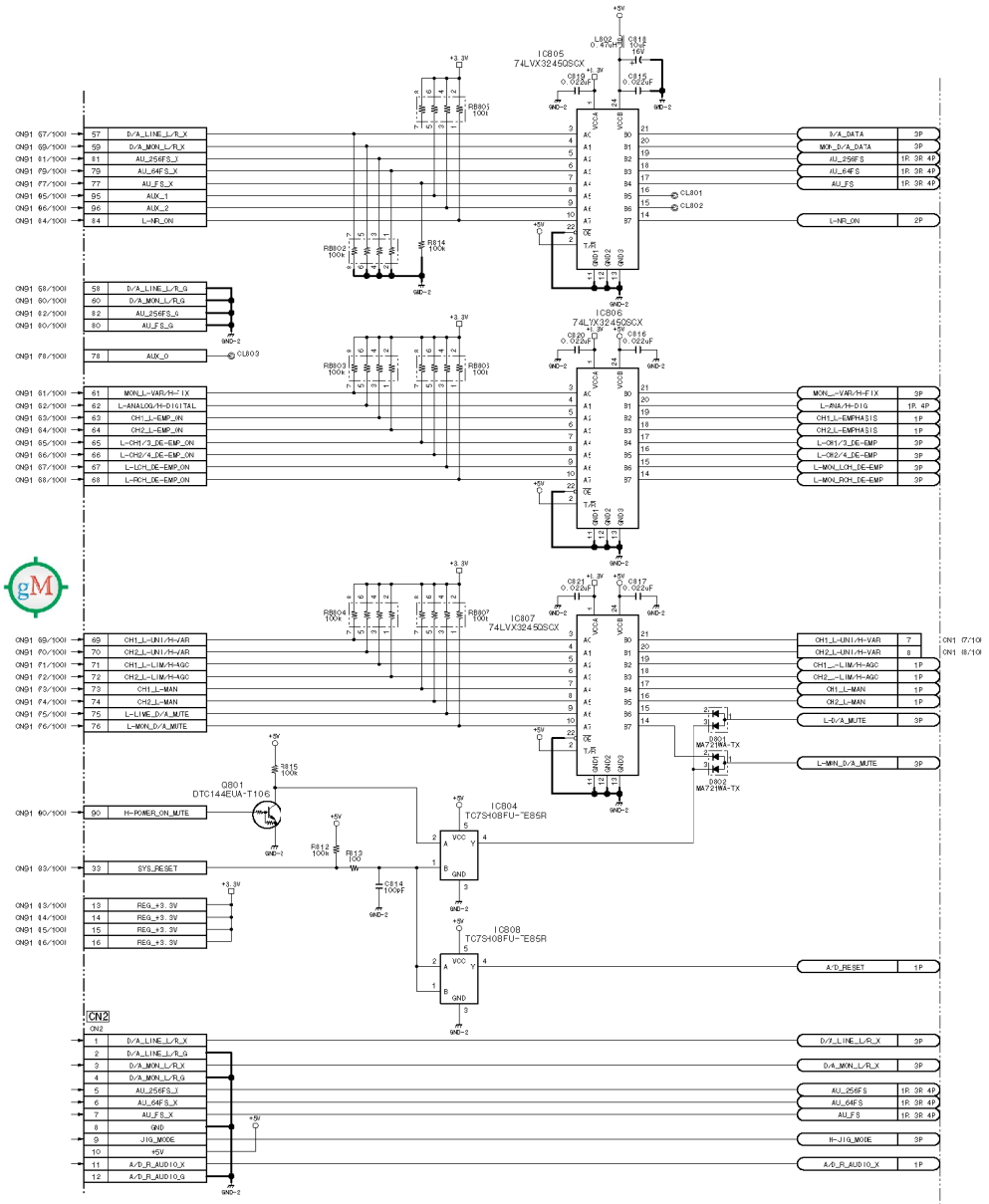
IC805
74LVX3245QSCX
IC806
74LVX3245QSCX
IC807
74LVX3245QSCX
IC804
TC7SH08FU-TE85R
IC808
TC7SH08FU-TE85R
Q801
DTC144EUA-T106
D801
MA721WA-TX
D802
MA721WA-TX
CN2
D/A_DATA
MCP_D/A_DATA
AU_256FS
AU_64FS
AU_FS
L-MR_ON
MON_L-VAR/H-FIX
L-ANA/H-DIG
CH1_L-EMPHASIS
CH2_L-EMPHASIS
L-CH1/3_DE-EMP
L-CH2/4_DE-EMP
L-MON_LCH_DE-EMP
L-MON_RCH_DE-EMP
CH1_L-LIN1/H-VAR
CH2_L-LIN1/H-VAR
CH1_L-LIM/H-AGC
CH2_L-LIM/H-AGC
CH1_L-MAN
CH2_L-MAN
L-D/A_MUTE
L-MIN_D/A_MUTE
A/D_RESET
H-JIG_MODE
A/D_R_AUDIO_X
D/A_LINE_L/R_X
D/A_LINE_L/R_G
D/A_MON_L/R_X
D/A_MON_L/R_G
AU_256FS_J
AU_64FS_X
AU_FS_X
AUX_1
AUX_2
L-MR_ON
AUX_0
L-ANALOG/H-DIGITAL
L-LIME_D/A_MUTE
L-MON_D/A_MUTE
H-POWER_ON_MUTE
SYS_RESET
REG_+3.3V
GND
+5V
+3.3V

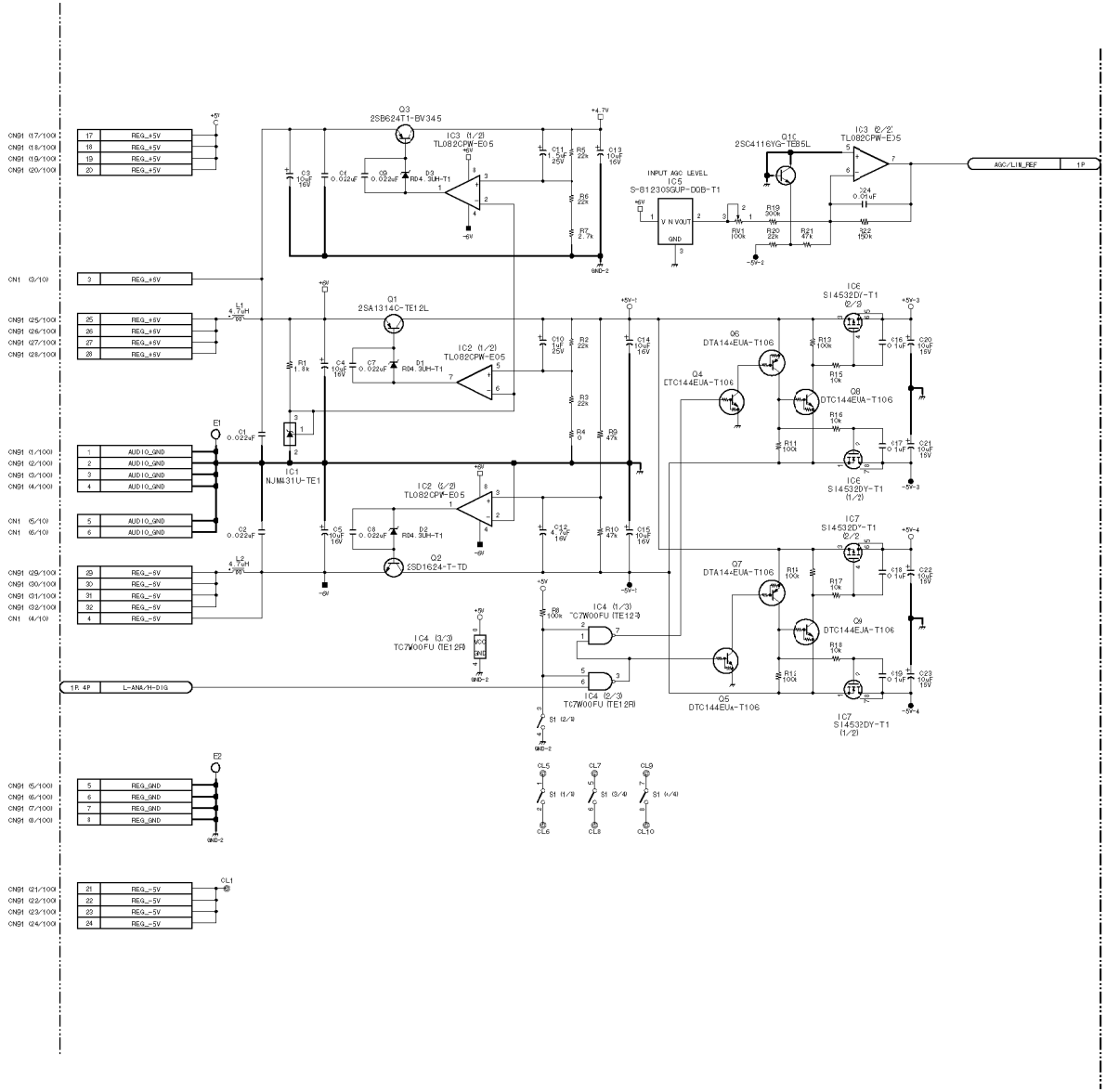

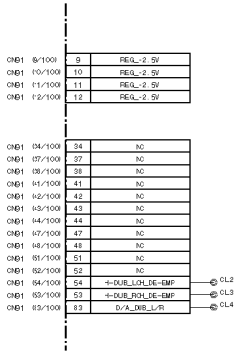

Audio A-D (Analog CH1/2 input), Audio D-A (Analog CH1/2 output)
Audio D-A (Monitor output)

AU-249 (4/4)

BOARD NO. 1-667-466-13
LOT NO. 905-
DNW-A22C_AU-249_013

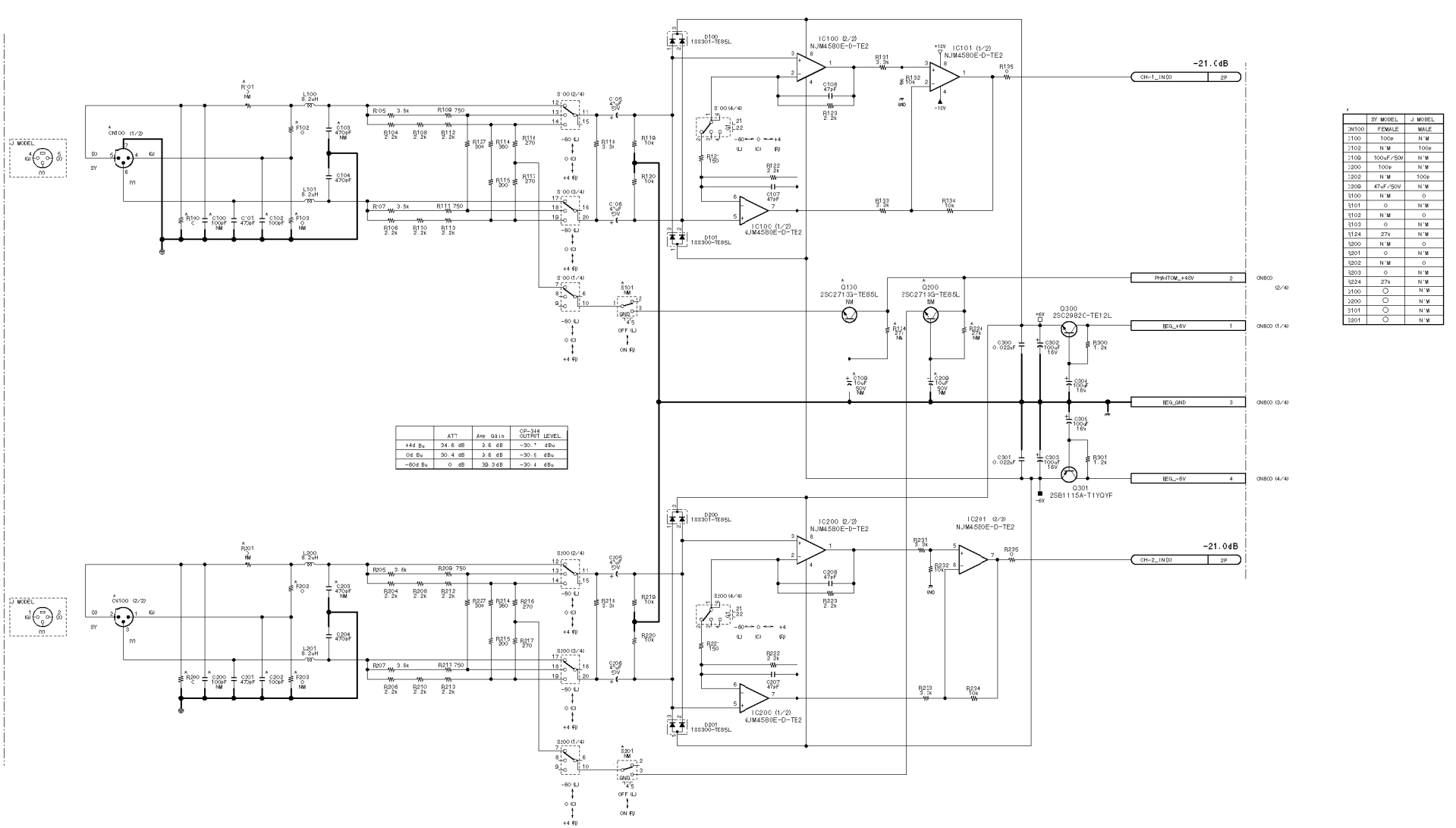

	ATT	Amp Gain	CP-344 OUTPUT LEVEL
+4d Bu	24.6 dB	3.6 dB	-30.7 dBu
0d Bu	30.4 dB	3.6 dB	-30.5 dBu
-60d Bu	0 dB	39.3dB	-30.4 dBu

	BY MODEL	J MODEL
CN100	FEMALE	MALE
C100	100p	N.M
C102	N.M	100p
C109	100uF/50V	N.M
C200	100p	N.M
C202	N.M	100p
C209	47uF/50V	N.M
R100	N.M	O
R101	O	N.M
R102	N.M	O
R103	O	N.M
R124	27k	N.M
R200	N.M	O
R201	O	N.M
R202	N.M	O
R203	O	N.M
R224	27k	N.M
S100	O	N.M
S200	O	N.M
S101	O	N.M
S201	O	N.M

Connector board (AUDIO/MONITOR system), select switch and audio amplifier (AUDIO INPUT/OUTPUT, MONITOR OUTPUT)

CP-344/344A (1/3)

BOARD NO. 1-674-851-11, 12
LOT NO. 905-

DNW-A28_CP-344_012

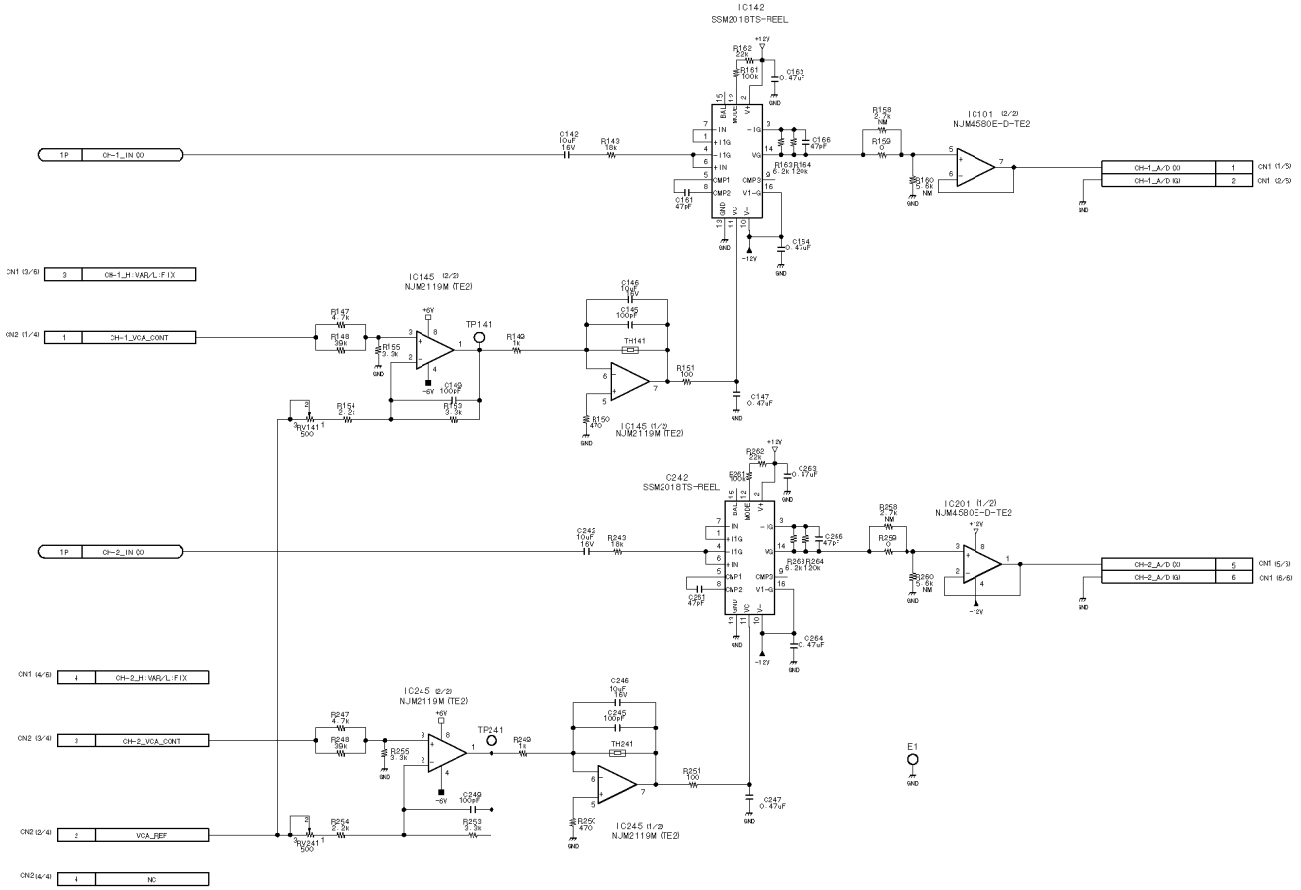

Connector board (AUDIO/MONITOR system), select switch and audio amplifier (AUDIO INPUT/OUTPUT, MONITOR OUTPUT)

CP-344/344A (2/3)

BOARD NO. 1-674-851-11, 12
LOT NO. 905-

DNW-A28_CP-344_812

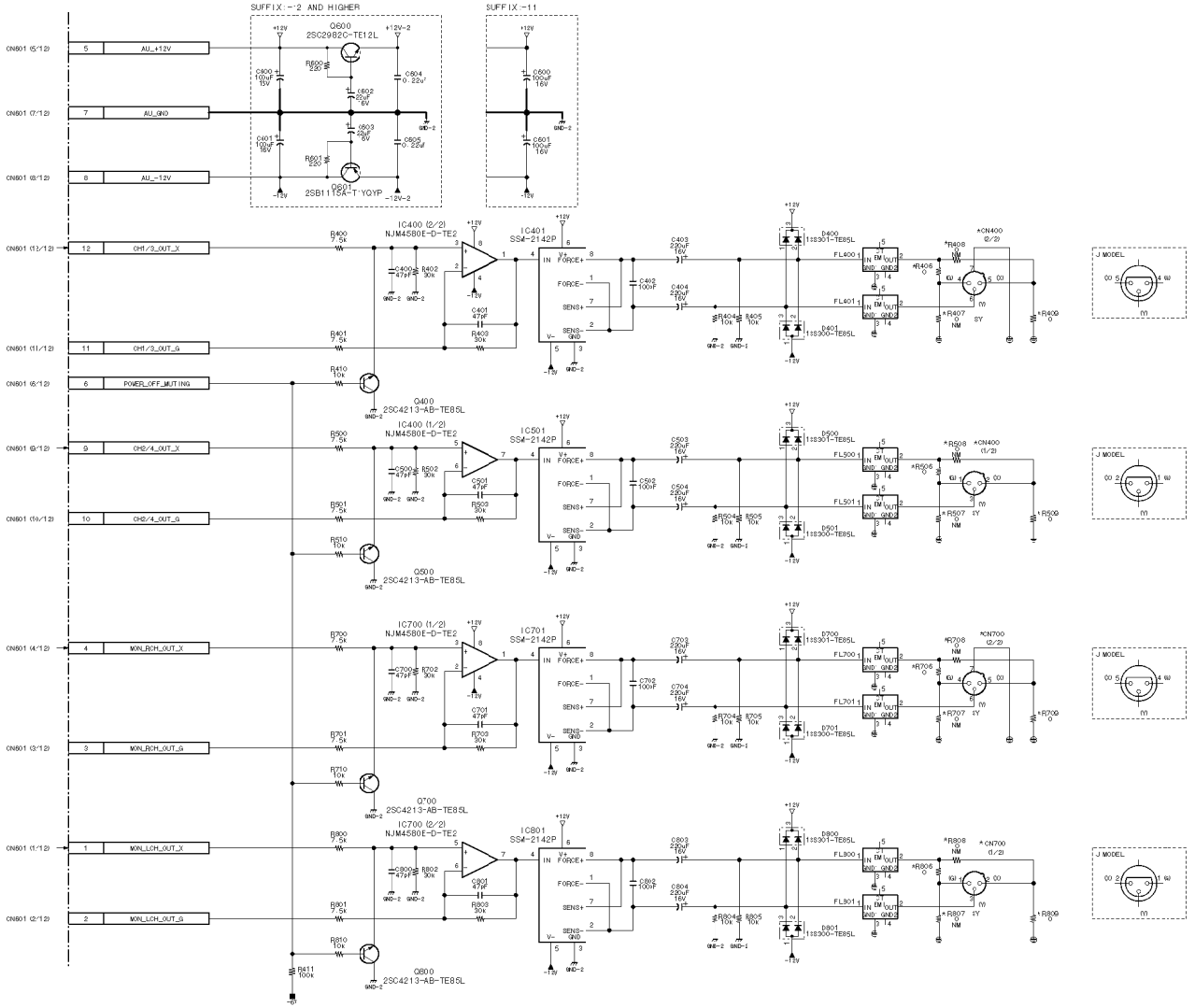

*

	SY MODEL	J MODEL
CN400	MALE	FEMALE
CN700	MALE	FEMALE
R406	N.M	0
R407	0	N.M
R408	0	N.M
R409	N.M	0
R506	N.M	0
R507	0	N.M
R508	0	N.M
R509	N.M	0
R706	N.M	0
R707	0	N.M
R708	0	N.M
R709	N.M	0
R806	N.M	0
R807	0	N.M
R808	0	N.M
R809	N.M	0

Connector board (AUDIO/MONITOR system), select switch and audio amplifier (AUDIO INPUT/OUTPUT, MONITOR OUTPUT)

CP-344/344A (3/3)

BOARD NO. 1-674-851-11, 12
LOT NO. 905-

DNW-A28_CF-344_012

http://getMANUAL.com

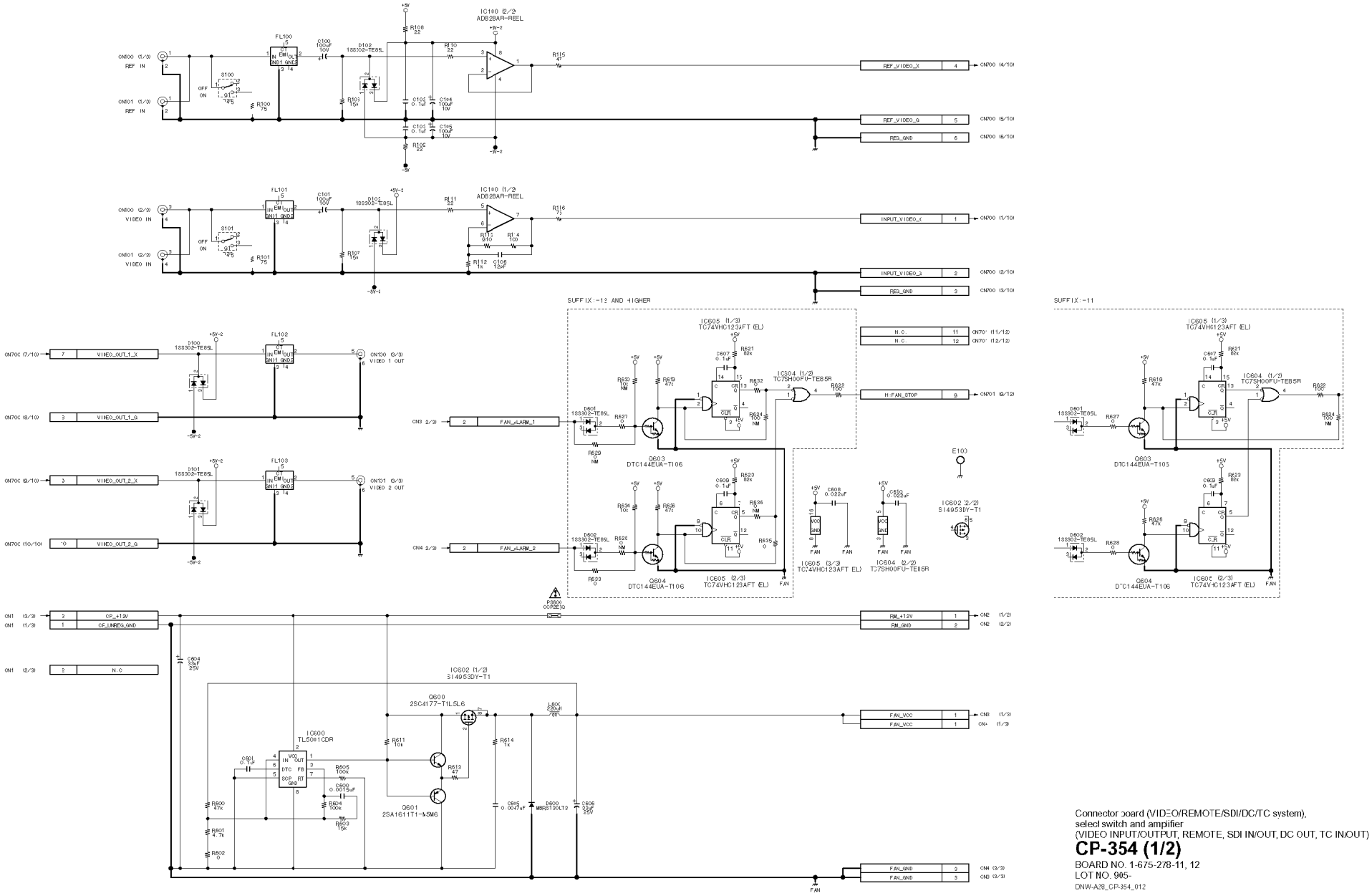

Connector board (VIDEO/REMOTE/SDI/DC/TC system), select switch and amplifier (VIDEO INPUT/OUTPUT, REMOTE, SDI IN/OUT, DC OUT, TC IN/OUT)

CP-354 (1/2)

BOARD NO. 1-675-278-11, 12
LOT NO. 905-

DNW-A28_CP-354_012

DNW-A28
DNW-A28P

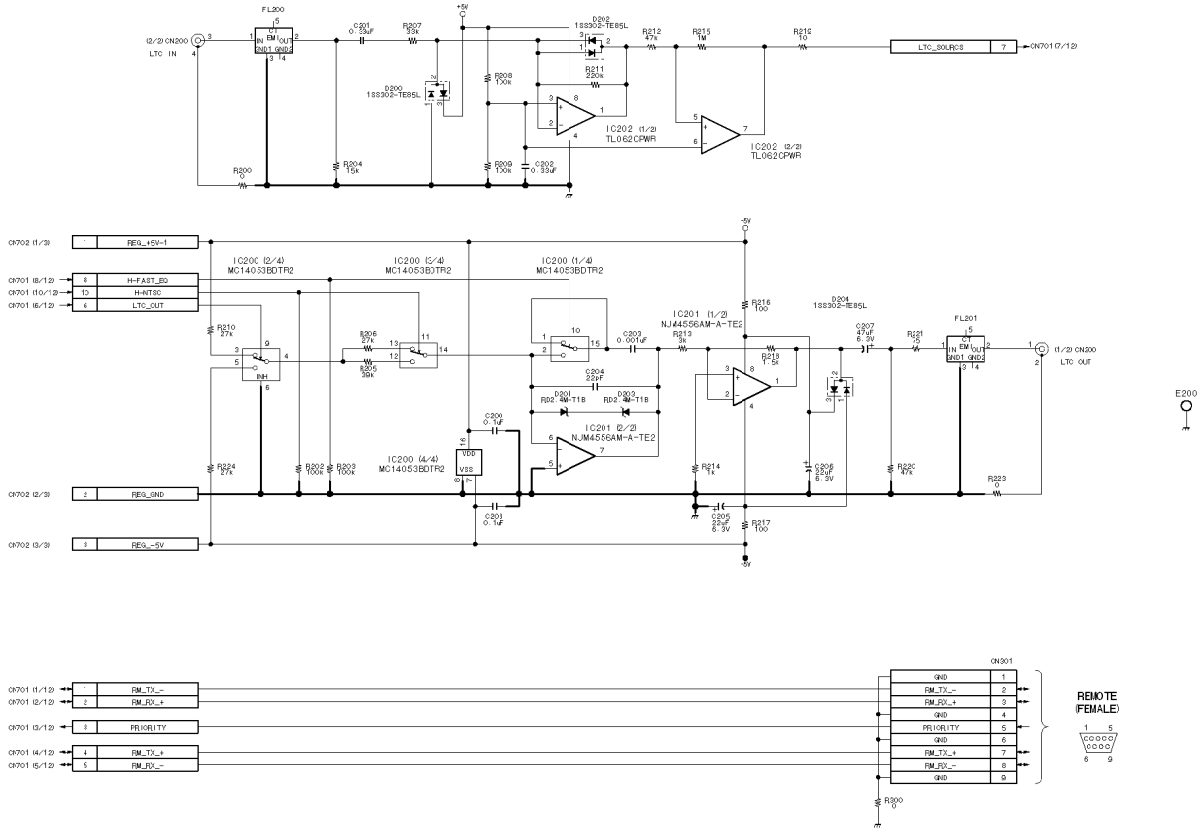

Connector board (VIDEO/REMOTE/SDI/DC/TC system), select switch anc amplifier (VIDEO INPUT/OUTPUT, REMOTE, SDI IN/OUT, DC OUT, TC IN/OUT)

CP-354 (2/2)

BOARD NO. 1-675-278-11, 12
LOT NO. 905-

DNW-A28_CP-354_012

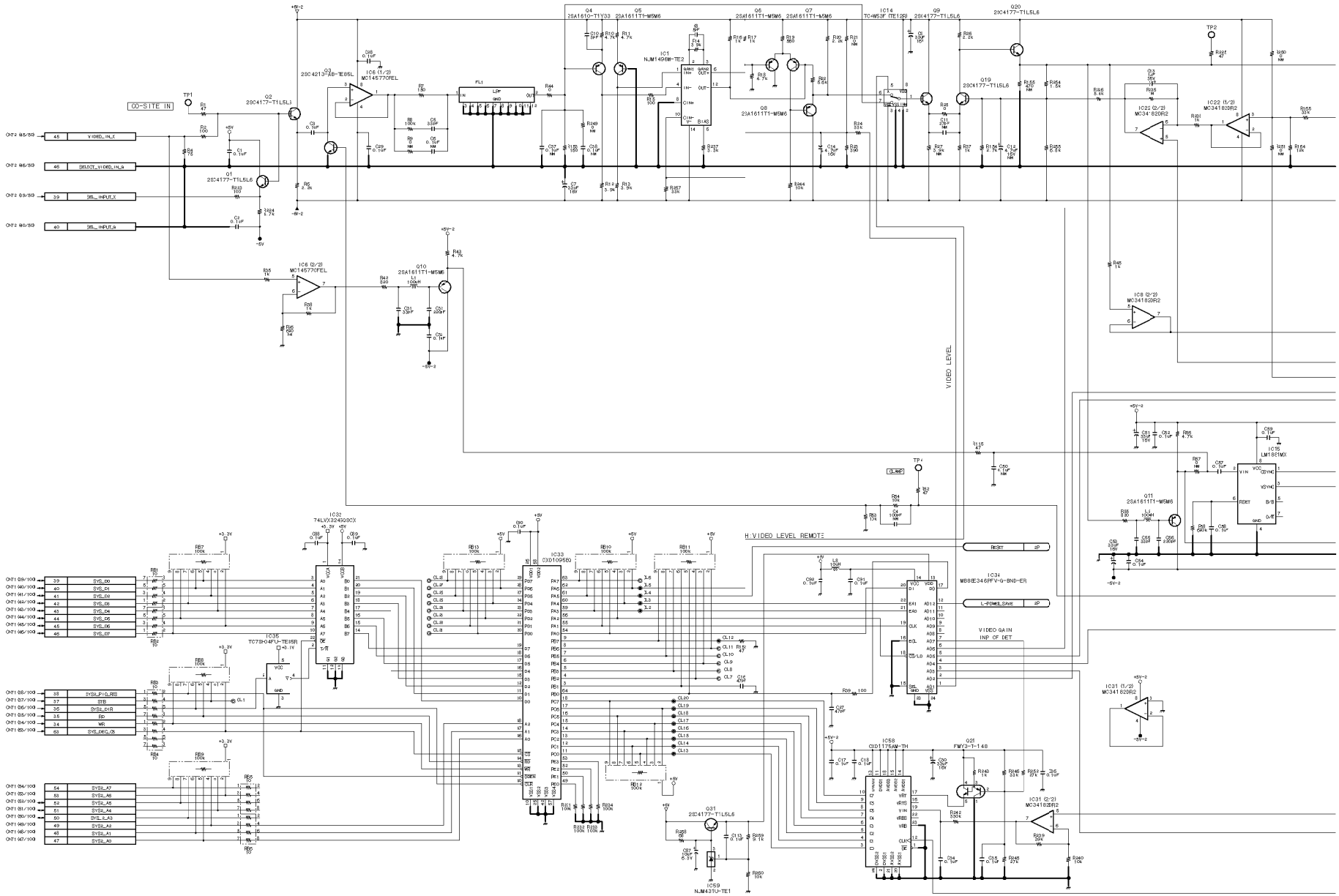
CO-SITE IN
VIDEO_IN_X
SELECT_VIDEO_IN_A
SEL_INPUT_X
SEL_INPUT_A
VIDEO LEVEL
H:VIDEO LEVEL REMOTE
L-POWER_SAVE
VIDEO GAIN
INP OF DET
SYS_D0
SYS_D1
SYS_D2
SYS_D3
SYS_D4
SYS_D5
SYS_D6
SYS_D7
SYS_P/O_RS
STB
SYS_DIR
RD
WR
SYS_DEC_CS
SYS_A7
SYS_A6
SYS_A5
SYS_A4
SYS_A3
SYS_A2
SYS_A1
SYS_A0

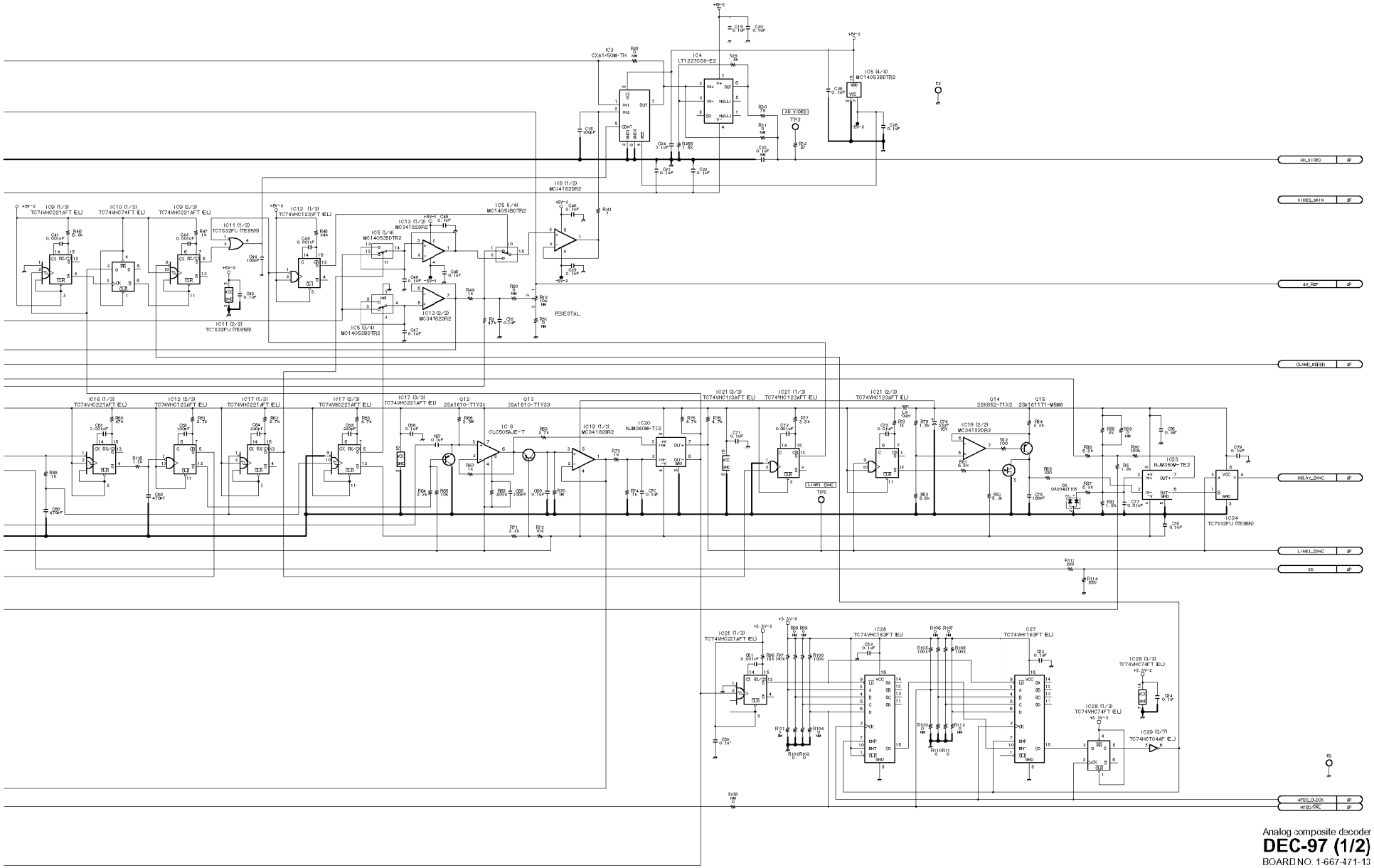

Analog composite decoder

DEC-97 (1/2)

BOARD NO. 1-667-471-13

LOT NO. 905-

DNW-A22(_DEC-97_913

DEC-97 (2/2)

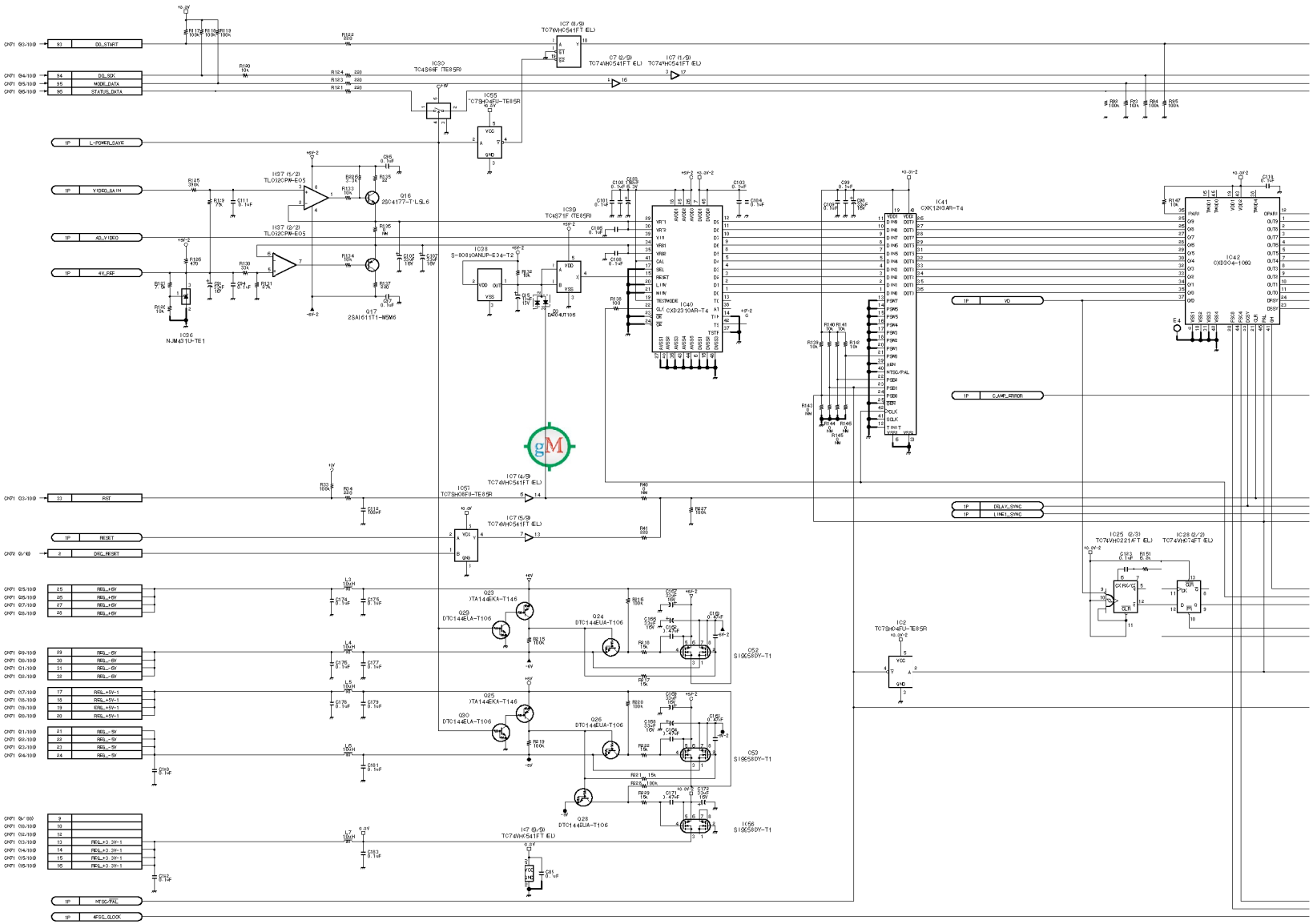

4-24

DNW-A28
DNW-A23P

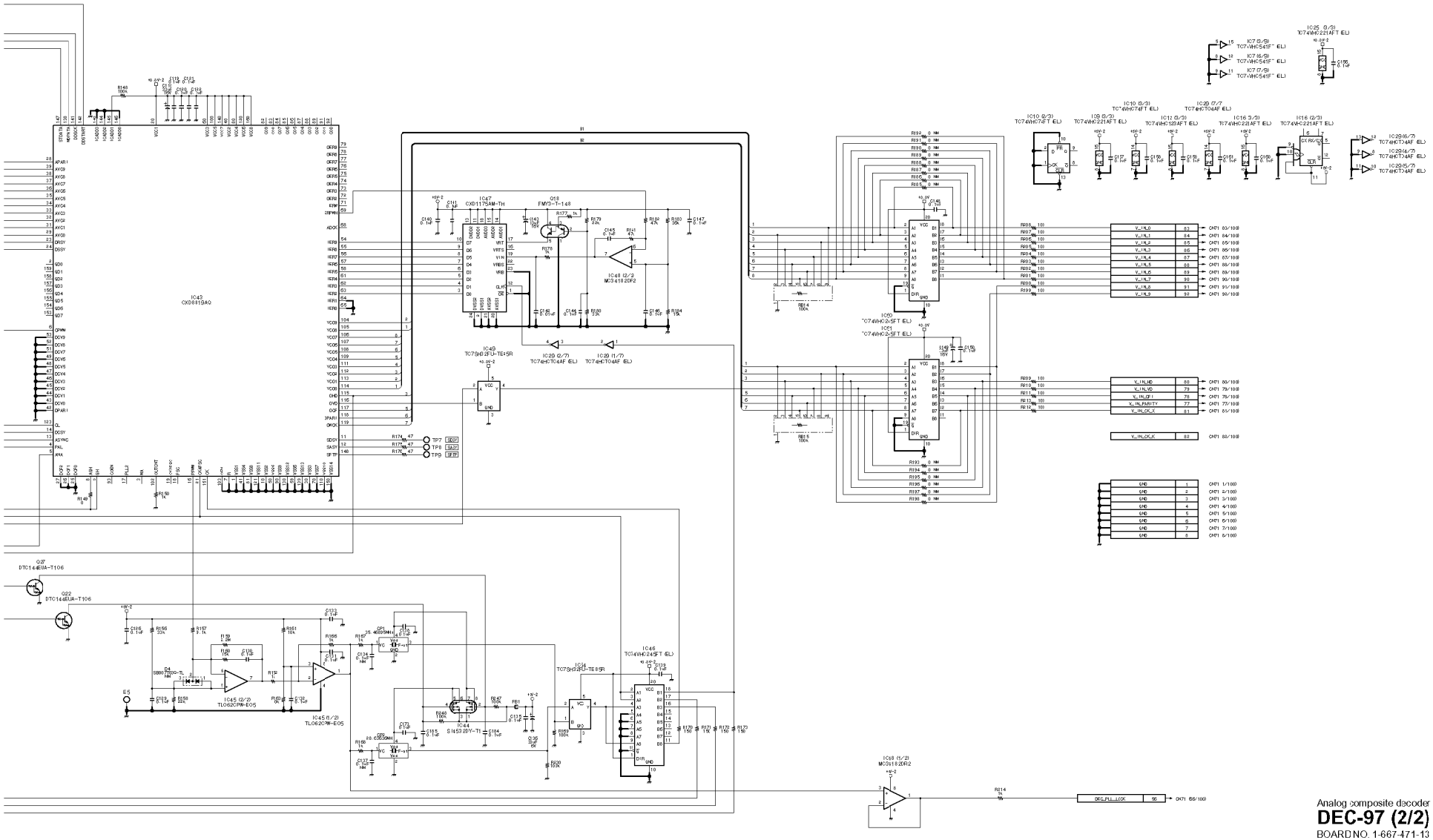

Analog composite decoder

DEC-97 (2/2)

BOARD NO. 1-667-471-13

LOT NO. 905-

DNW-A22(_DEC-97_913

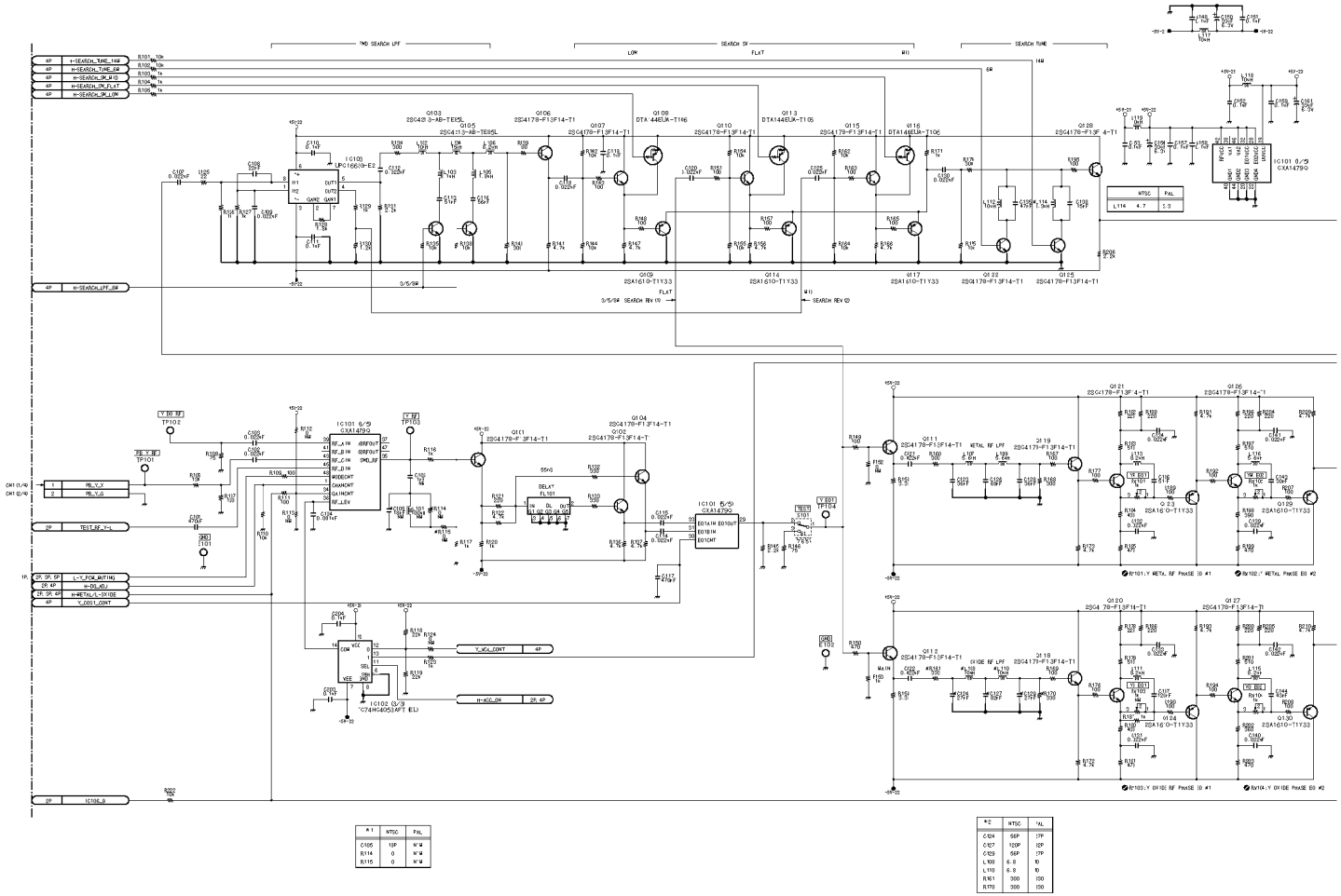

DM-114/114P (1/9)

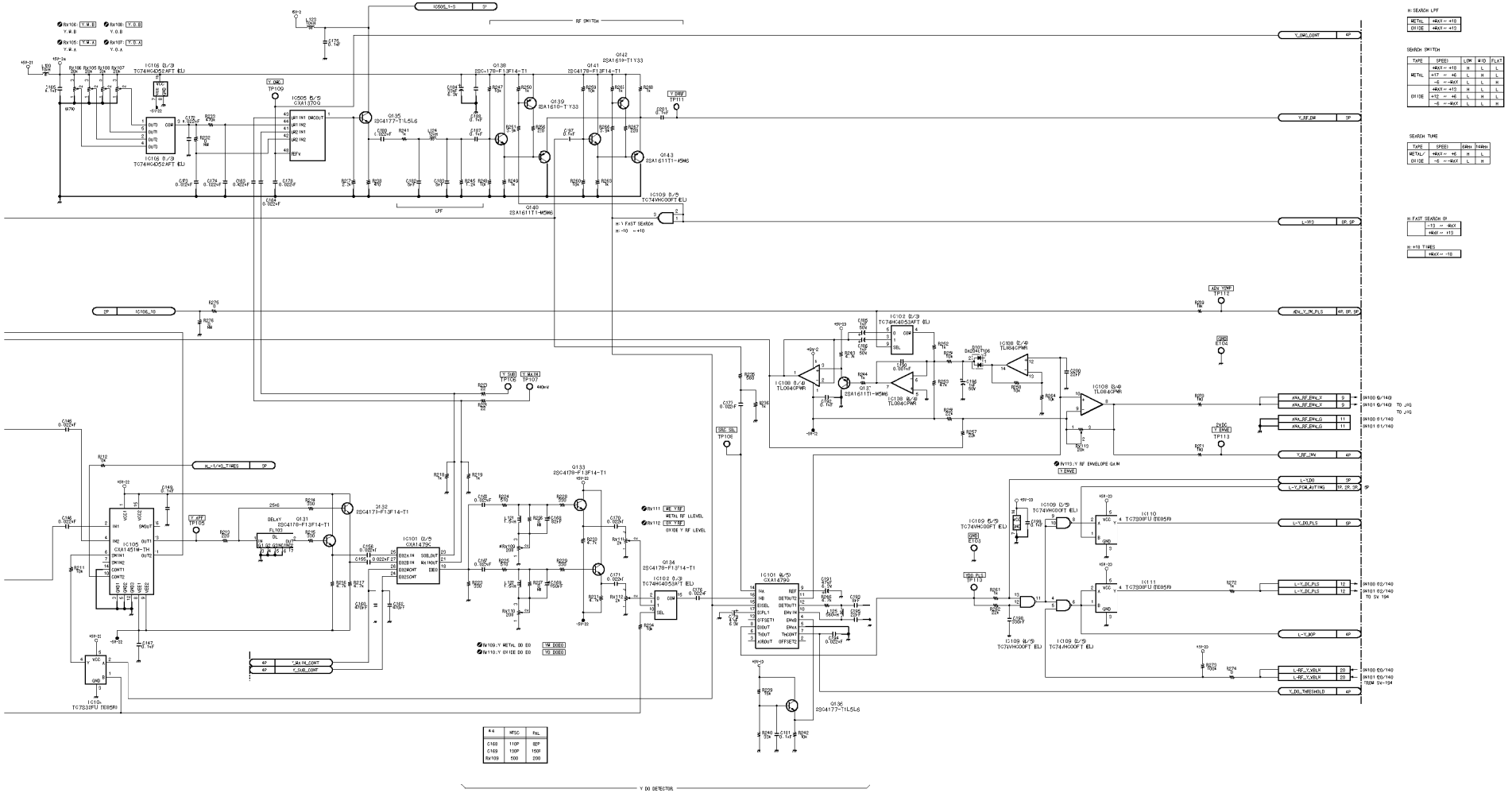

RF demodulator for analog Betacam PB, TBC

DM-114/114P (1/9)

BOARD NO. 1-667-547-13

LOT NO. 905-

DNW-A22)_DM-114_013

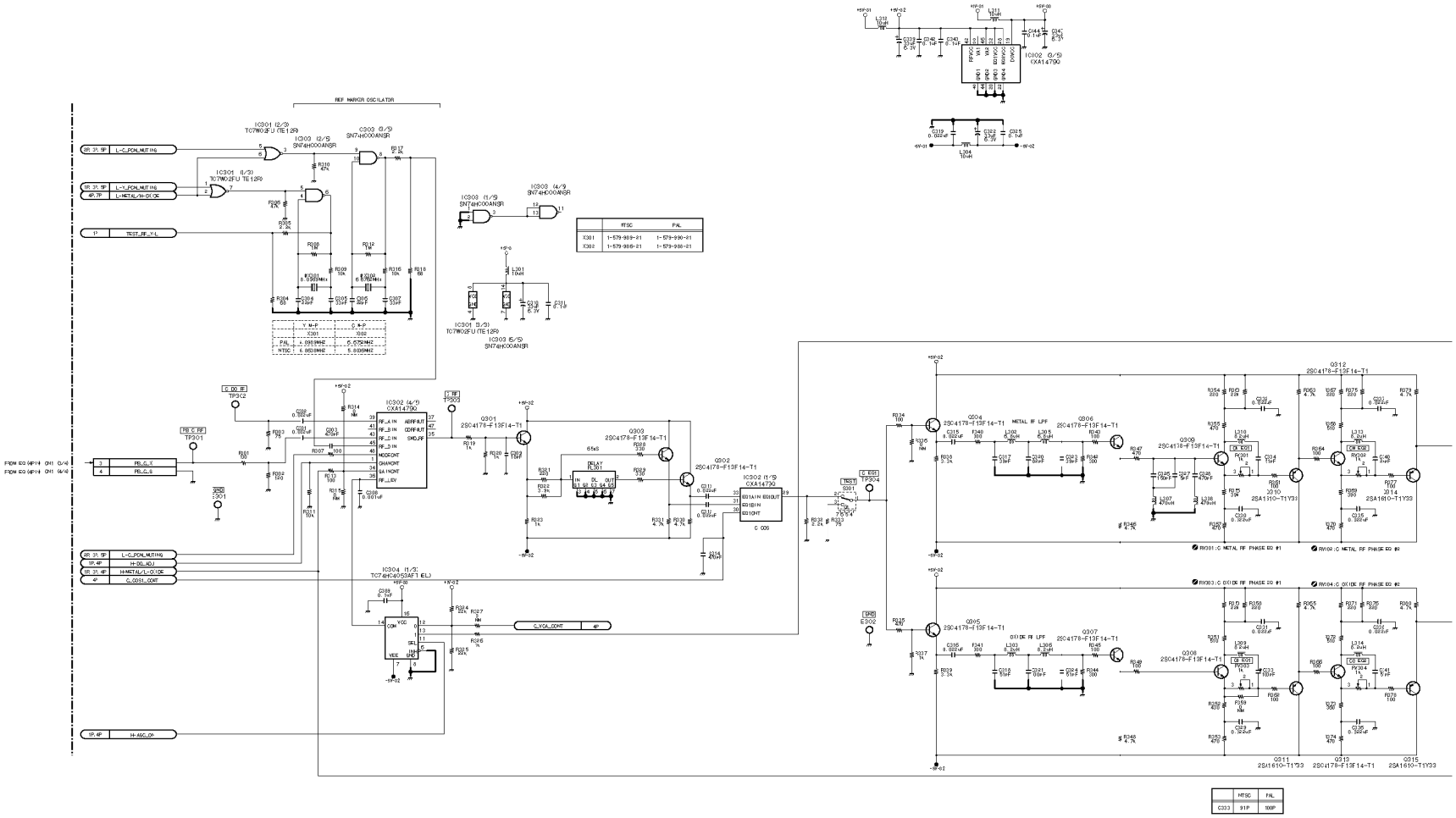
REF MARKER OSCILLATOR
IC301 (2/3) TC7W02FU (TE12R)
IC303 (2/3) SN74HC00ANSR
IC303 (1/3) TC7W02FU (TE12R)
IC302 (1/3) SN74HC00ANSR
IC303 (4/3) SN74HC00ANSR
IC301 (3/3) TC7W02FU (TE12R)
IC303 (5/3) SN74HC00ANSR
IC302 (4/3) CXA1473Q
IC304 (1/3) TC74HC4053AF(T.EL)
IC302 (1/3) CXA1473Q
IC302 (2/3) CXA1473Q
IC303 (3/3) SN74HC00ANSR
IC302 (3/3) CXA1473Q
Q301 2SC4178-F13F14-T1
Q302 2SC4178-F13F14-T1
Q303 2SC4178-F13F14-T1
Q304 2SC4178-F13F14-T1
Q305 2SC4178-F13F14-T1
Q306 2SC4178-F13F14-T1
Q307 2SC4178-F13F14-T1
Q308 2SC4178-F13F14-T1
Q309 2SC4178-F13F14-T1
Q310 2SA1610-T1Y33
Q311 2SA1610-T1Y33
Q312 2SC4178-F13F14-T1
Q313 2SC4178-F13F14-T1
Q314 2SA1610-T1Y33
Q315 2SA1610-T1Y33
METAL RF LPF
OXIDE RF LPF
L_CH_CONT
H_GC_CH
H_METAL/L_OXIDE
H_GC_ADJ
L_C_PCH_MUTING
L_Y_PCH_MUTING
L_METAL/H_OXIDE
TEST_RF_Y/L
REL_C_Y
REL_C_S
C_VCA_CONT
RV301:C METAL RF PHASE EQ #1
RV302:C METAL RF PHASE EQ #2
RV303:C OXIDE RF PHASE EQ #1
RV304:C OXIDE RF PHASE EQ #2
NTSC
PAL
X301
X302
1-579-989-21
1-579-990-21
1-579-988-21
1-579-988-21
C333
91P
100P

http://getMANUAL.com

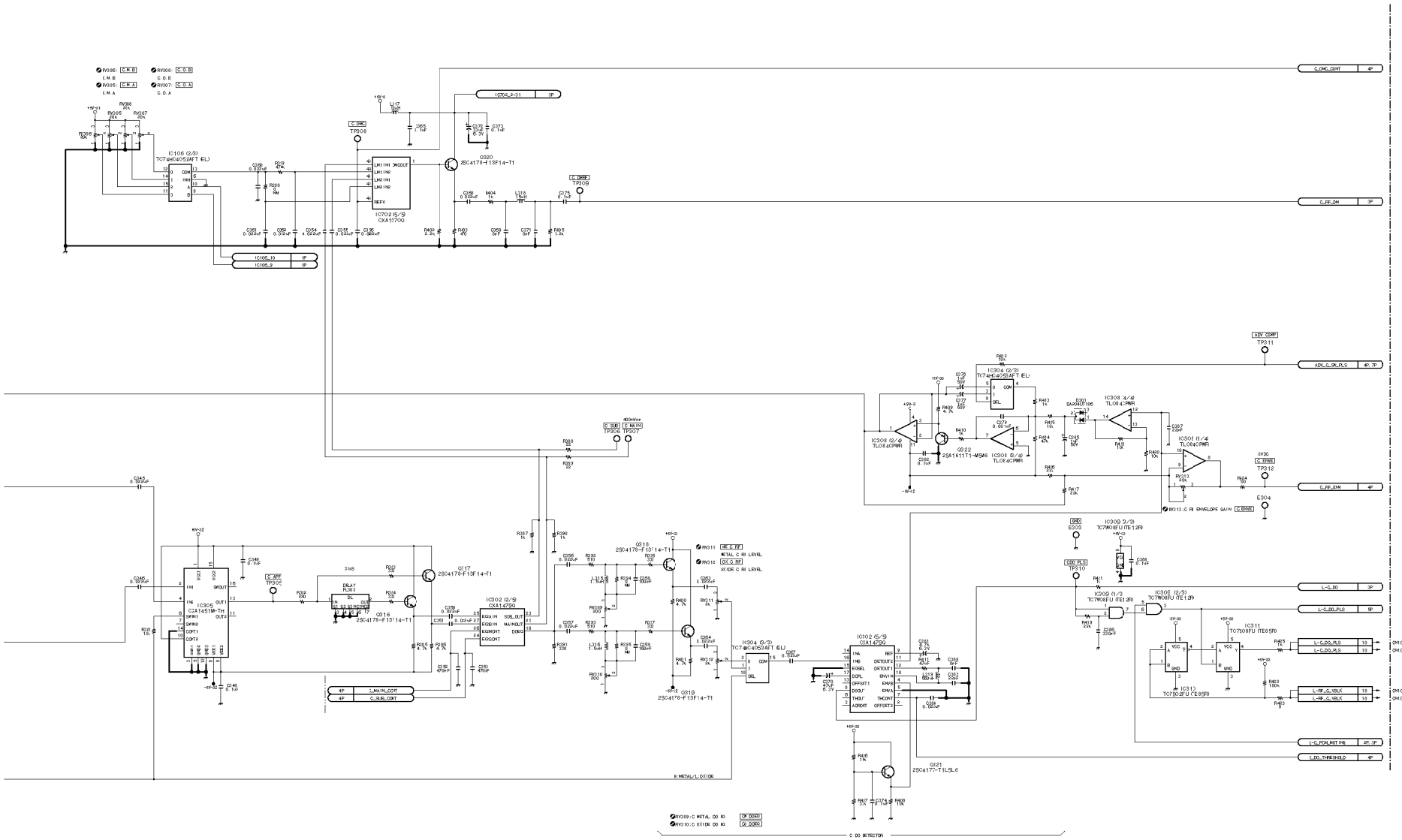

RF demodulator for analog Betacam PB, TBC

DM-114/114P (2/9)

BOARD NO. 1-667-547-13

LOT NO. 905-

DNW-A220_DM-114_013

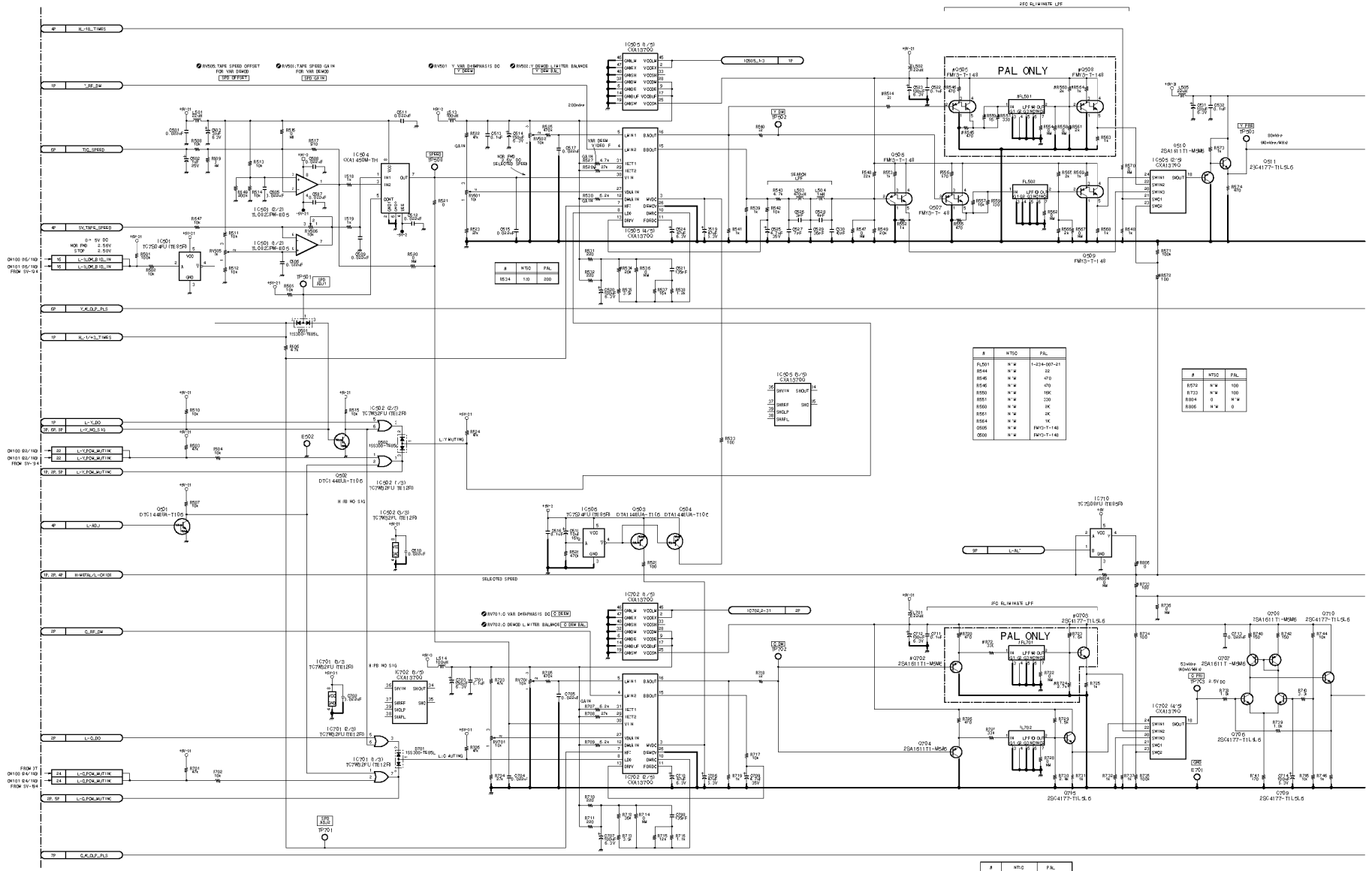
PAL ONLY
PAL ONLY
IC505 (3/5) CXA1370Q
IC504 CXA1450M-TH
IC501 TC7S04FU
IC502 TC7W53FU
IC505 TC7S08FU
IC710 TC7S08FU
Q501 DTC144EUA-T106
Q502 DTC144EUA-T106
Q503 DTA144EUA-T106
Q504 DTA144EUA-T106
Q701 2SA1611T-M5M6
Q702 2SA1611T-M5M6
Q703 2SC4177-T1L5L6
Q704 2SA1611T-M5M6
Q705 2SC4177-T1L5L6
Q706 2SA1611T-M5M6
Q707 2SA1611T-M5M6
Q708 2SC4177-T1L5L6
Q709 2SC4177-T1L5L6
Q710 2SC4177-T1L5L6
Q711 2SA1611T-M5M6
Q505 (2/5) CXA1370Q
Q506 FMY3-T-148
Q507 FMY3-T-148
Q508 FMY3-T-148
Q509 FMY3-T-148
IC702 (4/5) CXA1370Q
IC701 (3/3) TC7W53FU
IC702 (5/5) CXA1370Q
IC702 (2/5) CXA1370Q
IC702 (3/5) CXA1370Q
IC505 (5/5) CXA1370Q
IC505 (4/5) CXA1370Q
IC505 (1/5) CXA1370Q
IC505 (2/5) CXA1370Q
IC502 (2/3) TC7W53FU
IC502 (1/3) TC7W53FU
IC502 (3/3) TC7W53FU
IC701 (2/3) TC7W53FU
IC701 (1/3) TC7W53FU
IC505 TC7S08FU
IC710 TC7S08FU
FL501
FL502
FL701
FL702
TP501
TP502
TP503
TP504
TP701
TP702
TP703
TP704
TP705
TP706
TP707
TP708
TP709
TP710
TP711
TP712
TP713
TP714
TP715
TP716
TP717
TP718
TP719
TP720
TP721
TP722
TP723
TP724
TP725
TP726
TP727
TP728
TP729
TP730
TP731
TP732
TP733
TP734
TP735
TP736
TP737
TP738
TP739
TP740
TP741
TP742
TP743
TP744
TP745
TP746
TP747
TP748
TP749
TP750
TP751
TP752
TP753
TP754
TP755
TP756
TP757
TP758
TP759
TP760
TP761
TP762
TP763
TP764
TP765
TP766
TP767
TP768
TP769
TP770
TP771
TP772
TP773
TP774
TP775
TP776
TP777
TP778
TP779
TP780
TP781
TP782
TP783
TP784
TP785
TP786
TP787
TP788
TP789
TP790
TP791
TP792
TP793
TP794
TP795
TP796
TP797
TP798
TP799
TP7100
TP7101
TP7102
TP7103
TP7104
TP7105
TP7106
TP7107
TP7108
TP7109
TP7110
TP7111
TP7112
TP7113
TP7114
TP7115
TP7116
TP7117
TP7118
TP7119
TP7120
TP7121
TP7122
TP7123
TP7124
TP7125
TP7126
TP7127
TP7128
TP7129
TP7130
TP7131
TP7132
TP7133
TP7134
TP7135
TP7136
TP7137
TP7138
TP7139
TP7140
TP7141
TP7142
TP7143
TP7144
TP7145
TP7146
TP7147
TP7148
TP7149
TP7150
TP7151
TP7152
TP7153
TP7154
TP7155
TP7156
TP7157
TP7158
TP7159
TP7160
TP7161
TP7162
TP7163
TP7164
TP7165
TP7166
TP7167
TP7168
TP7169
TP7170
TP7171
TP7172
TP7173
TP7174
TP7175
TP7176
TP7177
TP7178
TP7179
TP7180
TP7181
TP7182
TP7183
TP7184
TP7185
TP7186
TP7187
TP7188
TP7189
TP7190
TP7191
TP7192
TP7193
TP7194
TP7195
TP7196
TP7197
TP7198
TP7199
TP7200
TP7201
TP7202
TP7203
TP7204
TP7205
TP7206
TP7207
TP7208
TP7209
TP7210
TP7211
TP7212
TP7213
TP7214
TP7215
TP7216
TP7217
TP7218
TP7219
TP7220
TP7221
TP7222
TP7223
TP7224
TP7225
TP7226
TP7227
TP7228
TP7229
TP7230
TP7231
TP7232
TP7233
TP7234
TP7235
TP7236
TP7237
TP7238
TP7239
TP7240
TP7241
TP7242
TP7243
TP7244
TP7245
TP7246
TP7247
TP7248
TP7249
TP7250
TP7251
TP7252
TP7253
TP7254
TP7255
TP7256
TP7257
TP7258
TP7259
TP7260
TP7261
TP7262
TP7263
TP7264
TP7265
TP7266
TP7267
TP7268
TP7269
TP7270
TP7271
TP7272
TP7273
TP7274
TP7275
TP7276
TP7277
TP7278
TP7279
TP7280
TP7281
TP7282
TP7283
TP7284
TP7285
TP7286
TP7287
TP7288
TP7289
TP7290
TP7291
TP7292
TP7293
TP7294
TP7295
TP7296
TP7297
TP7298
TP7299
TP7300
TP7301
TP7302
TP7303
TP7304
TP7305
TP7306
TP7307
TP7308
TP7309
TP7310
TP7311
TP7312
TP7313
TP7314
TP7315
TP7316
TP7317
TP7318
TP7319
TP7320
TP7321
TP7322
TP7323
TP7324
TP7325
TP7326
TP7327
TP7328
TP7329
TP7330
TP7331
TP7332
TP7333
TP7334
TP7335
TP7336
TP7337
TP7338
TP7339
TP7340
TP7341
TP7342
TP7343
TP7344
TP7345
TP7346
TP7347
TP7348
TP7349
TP7350
TP7351
TP7352
TP7353
TP7354
TP7355
TP7356
TP7357
TP7358
TP7359
TP7360
TP7361
TP7362
TP7363
TP7364
TP7365
TP7366
TP7367
TP7368
TP7369
TP7370
TP7371
TP7372
TP7373
TP7374
TP7375
TP7376
TP7377
TP7378
TP7379
TP7380
TP7381
TP7382
TP7383
TP7384
TP7385
TP7386
TP7387
TP7388
TP7389
TP7390
TP7391
TP7392
TP7393
TP7394
TP7395
TP7396
TP7397
TP7398
TP7399
TP7400
TP7401
TP7402
TP7403
TP7404
TP7405
TP7406
TP7407
TP7408
TP7409
TP7410
TP7411
TP7412
TP7413
TP7414
TP7415
TP7416
TP7417
TP7418
TP7419
TP7420
TP7421
TP7422
TP7423
TP7424
TP7425
TP7426
TP7427
TP7428
TP7429
TP7430
TP7431
TP7432
TP7433
TP7434
TP7435
TP7436
TP7437
TP7438
TP7439
TP7440
TP7441
TP7442
TP7443
TP7444
TP7445
TP7446
TP7447
TP7448
TP7449
TP7450
TP7451
TP7452
TP7453
TP7454
TP7455
TP7456
TP7457
TP7458
TP7459
TP7460
TP7461
TP7462
TP7463
TP7464
TP7465
TP7466
TP7467
TP7468
TP7469
TP7470
TP7471
TP7472
TP7473
TP7474
TP7475
TP7476
TP7477
TP7478
TP7479
TP7480
TP7481
TP7482
TP7483
TP7484
TP7485
TP7486
TP7487
TP7488
TP7489
TP7490
TP7491
TP7492
TP7493
TP7494
TP7495
TP7496
TP7497
TP7498
TP7499
TP7500
TP7501
TP7502
TP7503
TP7504
TP7505
TP7506
TP7507
TP7508
TP7509
TP7510
TP7511
TP7512
TP7513
TP7514
TP7515
TP7516
TP7517
TP7518
TP7519
TP7520
TP7521
TP7522
TP7523
TP7524
TP7525
TP7526
TP7527
TP7528
TP7529
TP7530
TP7531
TP7532
TP7533
TP7534
TP7535
TP7536
TP7537
TP7538
TP7539
TP7540
TP7541
TP7542
TP7543
TP7544
TP7545
TP7546
TP7547
TP7548
TP7549
TP7550
TP7551
TP7552
TP7553
TP7554
TP7555
TP7556
TP7557
TP7558
TP7559
TP7560
TP7561
TP7562
TP7563
TP7564
TP7565
TP7566
TP7567
TP7568
TP7569
TP7570
TP7571
TP7572
TP7573
TP7574
TP7575
TP7576
TP7577
TP7578
TP7579
TP7580
TP7581
TP7582
TP7583
TP7584
TP7585
TP7586
TP7587
TP7588
TP7589
TP7590
TP7591
TP7592
TP7593
TP7594
TP7595
TP7596
TP7597
TP7598
TP7599
TP7600
TP7601
TP7602
TP7603
TP7604
TP7605
TP7606
TP7607
TP7608
TP7609
TP7610
TP7611
TP7612
TP7613
TP7614
TP7615
TP7616
TP7617
TP7618
TP7619
TP7620
TP7621
TP7622
TP7623
TP7624
TP7625
TP7626
TP7627
TP7628
TP7629
TP7630
TP7631
TP7632
TP7633
TP7634
TP7635
TP7636
TP7637
TP7638
TP7639
TP7640
TP7641
TP7642
TP7643
TP7644
TP7645
TP7646
TP7647
TP7648
TP7649
TP7650
TP7651
TP7652
TP7653
TP7654
TP7655
TP7656
TP7657
TP7658
TP7659
TP7660
TP7661
TP7662
TP7663
TP7664
TP7665
TP7666
TP7667
TP7668
TP7669
TP7670
TP7671
TP7672
TP7673
TP7674
TP7675
TP7676
TP7677
TP7678
TP7679
TP7680
TP7681
TP7682
TP7683
TP7684
TP7685
TP7686
TP7687
TP7688
TP7689
TP7690
TP7691
TP7692
TP7693
TP7694
TP7695
TP7696
TP7697
TP7698
TP7699
TP7700
TP7701
TP7702
TP7703
TP7704
TP7705
TP7706
TP7707
TP7708
TP7709
TP7710
TP7711
TP7712
TP7713
TP7714
TP7715
TP7716
TP7717
TP7718
TP7719
TP7720
TP7721
TP7722
TP7723
TP7724
TP7725
TP7726
TP7727
TP7728
TP7729
TP7730
TP7731
TP7732
TP7733
TP7734
TP7735
TP7736
TP7737
TP7738
TP7739
TP7740
TP7741
TP7742
TP7743
TP7744
TP7745
TP7746
TP7747
TP7748
TP7749
TP7750
TP7751
TP7752
TP7753
TP7754
TP7755
TP7756
TP7757
TP7758
TP7759
TP7760
TP7761
TP7762
TP7763
TP7764
TP7765
TP7766
TP7767
TP7768
TP7769
TP7770
TP7771
TP7772
TP7773
TP7774
TP7775
TP7776
TP7777
TP7778
TP7779
TP7780
TP7781
TP7782
TP7783
TP7784
TP7785
TP7786
TP7787
TP7788
TP7789
TP7790
TP7791
TP7792
TP7793
TP7794
TP7795
TP7796
TP7797
TP7798
TP7799
TP7800
TP7801
TP7802
TP7803
TP7804
TP7805
TP7806
TP7807
TP7808
TP7809
TP7810
TP7811
TP7812
TP7813
TP7814
TP7815
TP7816
TP7817
TP7818
TP7819
TP7820
TP7821
TP7822
TP7823
TP7824
TP7825
TP7826
TP7827
TP7828
TP7829
TP7830
TP7831
TP7832
TP7833
TP7834
TP7835
TP7836
TP7837
TP7838
TP7839
TP7840
TP7841
TP7842
TP7843
TP7844
TP7845
TP7846
TP7847
TP7848
TP7849
TP7850
TP7851
TP7852
TP7853
TP7854
TP7855
TP7856
TP7857
TP7858
TP7859
TP7860
TP7861
TP7862
TP7863
TP7864
TP7865
TP7866
TP7867
TP7868
TP7869
TP7870
TP7871
TP7872
TP7873
TP7874
TP7875
TP7876
TP7877
TP7878
TP7879
TP7880
TP7881
TP7882
TP7883
TP7884
TP7885
TP7886
TP7887
TP7888
TP7889
TP7890
TP7891
TP7892
TP7893
TP7894
TP7895
TP7896
TP7897
TP7898
TP7899
TP7900
TP7901
TP7902
TP7903
TP7904
TP7905
TP7906
TP7907
TP7908
TP7909
TP7910
TP7911
TP7912
TP7913
TP7914
TP7915
TP7916
TP7917
TP7918
TP7919
TP7920
TP7921
TP7922
TP7923
TP7924
TP7925
TP7926
TP7927
TP7928
TP7929
TP7930
TP7931
TP7932
TP7933
TP7934
TP7935
TP7936
TP7937
TP7938
TP7939
TP7940
TP7941
TP7942
TP7943
TP7944
TP7945
TP7946
TP7947
TP7948
TP7949
TP7950
TP7951
TP7952
TP7953
TP7954
TP7955
TP7956
TP7957
TP7958
TP7959
TP7960
TP7961
TP7962
TP7963
TP7964
TP7965
TP7966
TP7967
TP7968
TP7969
TP7970
TP7971
TP7972
TP7973
TP7974
TP7975
TP7976
TP7977
TP7978
TP7979
TP7980
TP7981
TP7982
TP7983
TP7984
TP7985
TP7986
TP7987
TP7988
TP7989
TP7990
TP7991
TP7992
TP7993
TP7994
TP7995
TP7996
TP7997
TP7998
TP7999
TP8000

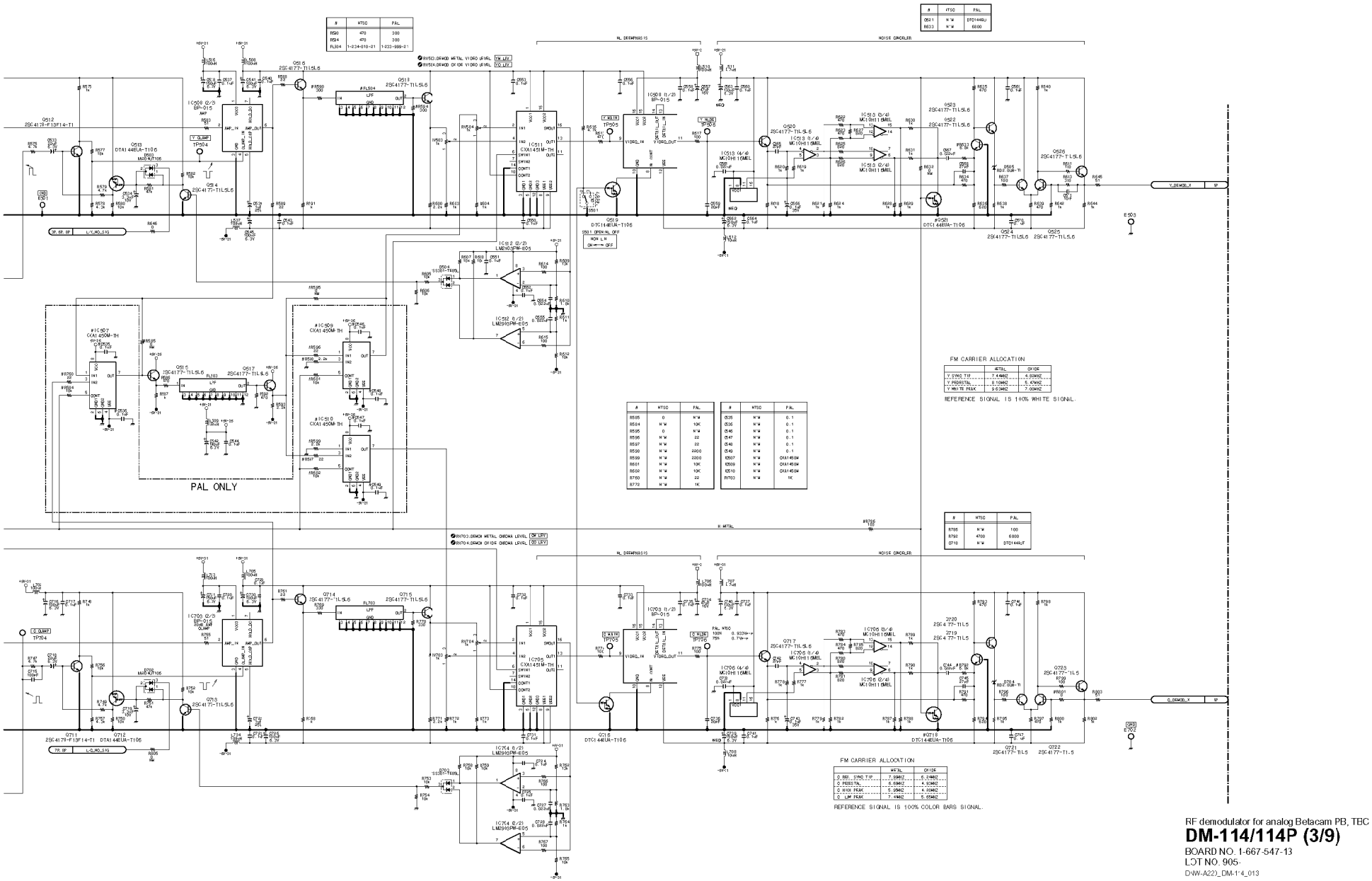

RF demodulator for analog Betacam PB, TBC

DM-114/114P (3/9)

BOARD NO. 1-667-547-13

LOT NO. 905-

DNW-A22)_DM-114_013

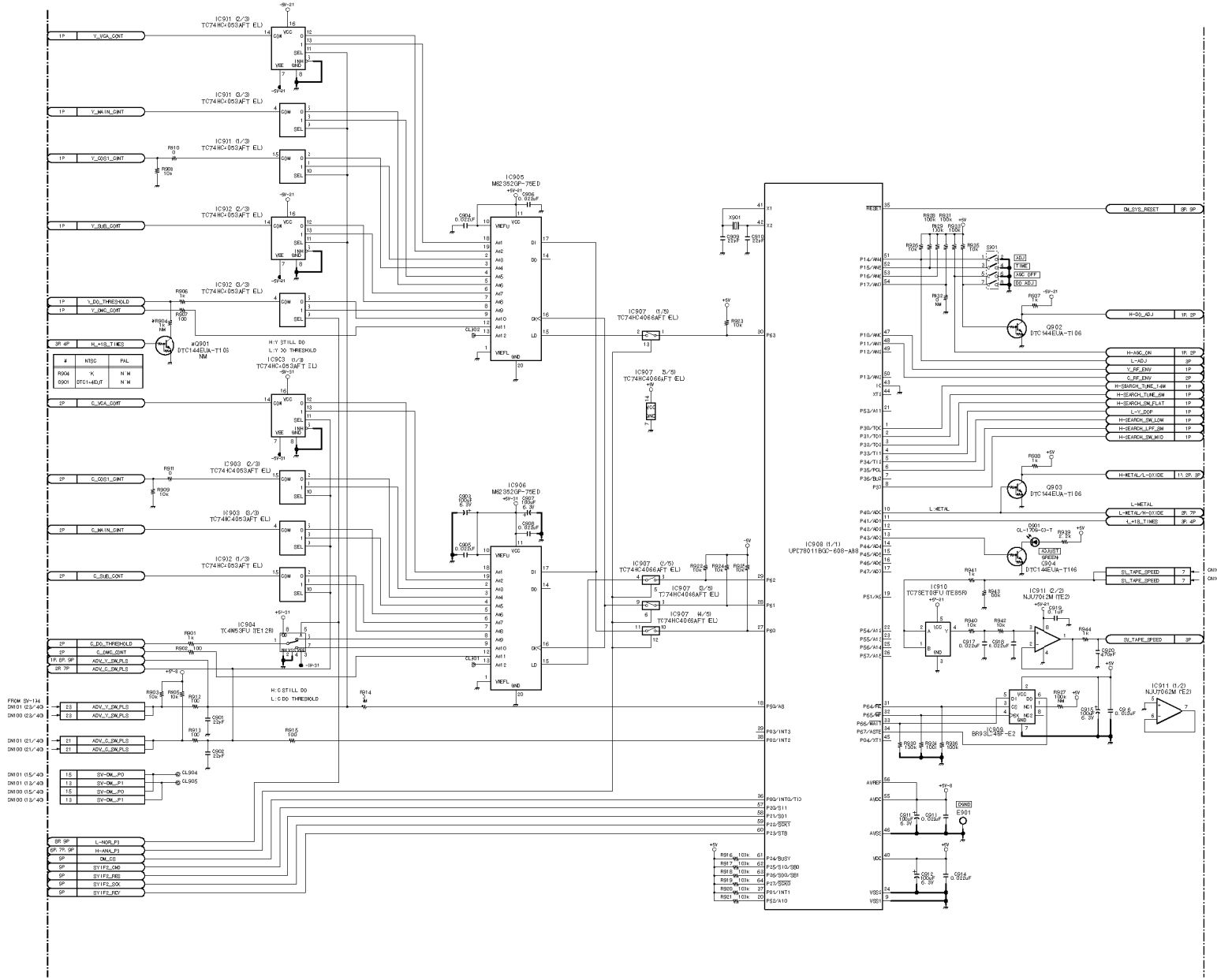

DM-114/114P (4/9)

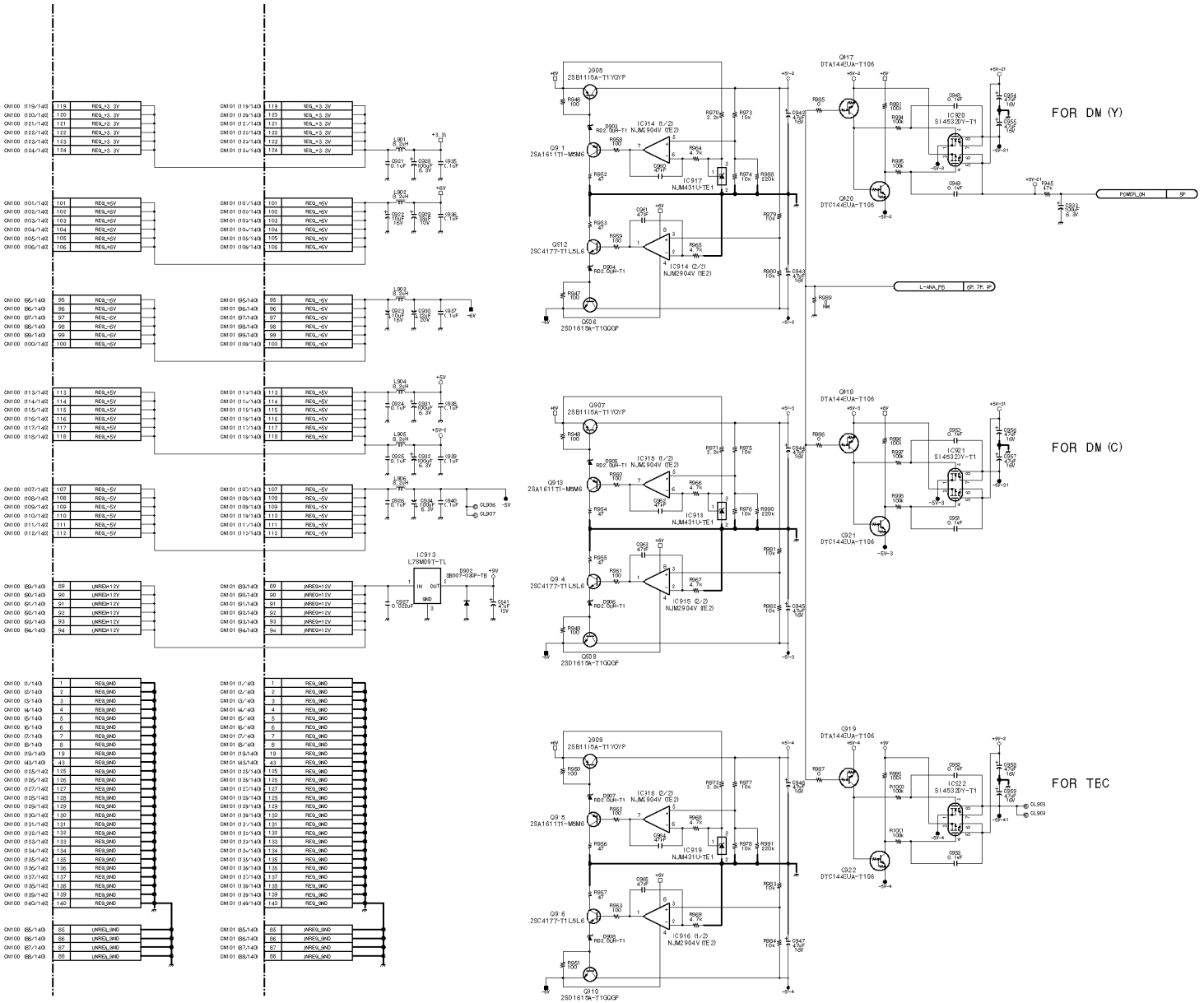

RF demodulator for analog Betacam PB, TBC

DM-114/114P (4/9)

BOARD NO. 1-667-547-13

LOT NO. 905-

DNW-A22)_DM-114_013

DNW-A28

DNW-A28P

4-33

DM-114/114P (5/9)

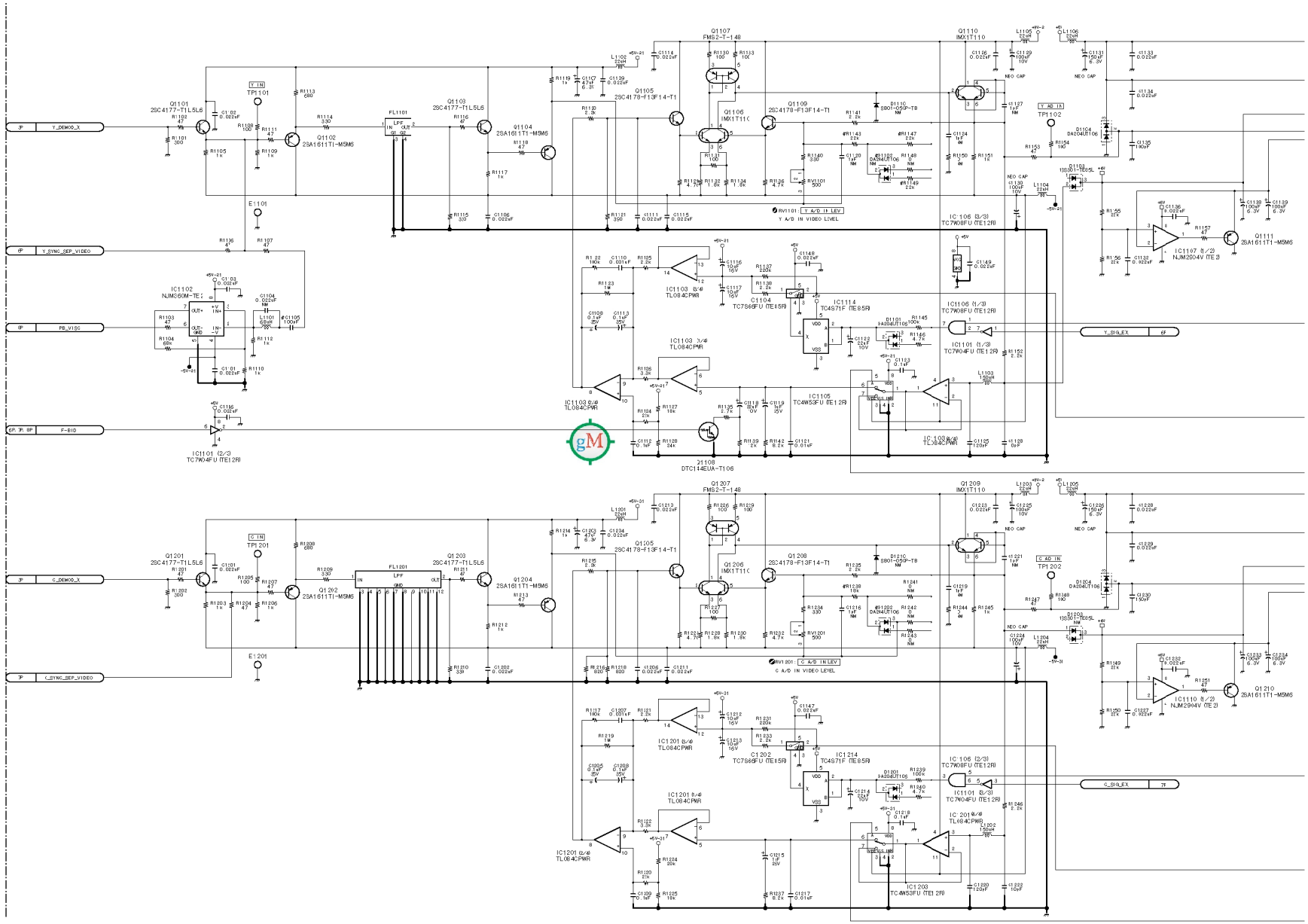

4-34

DNW-A28
DNW-A23P

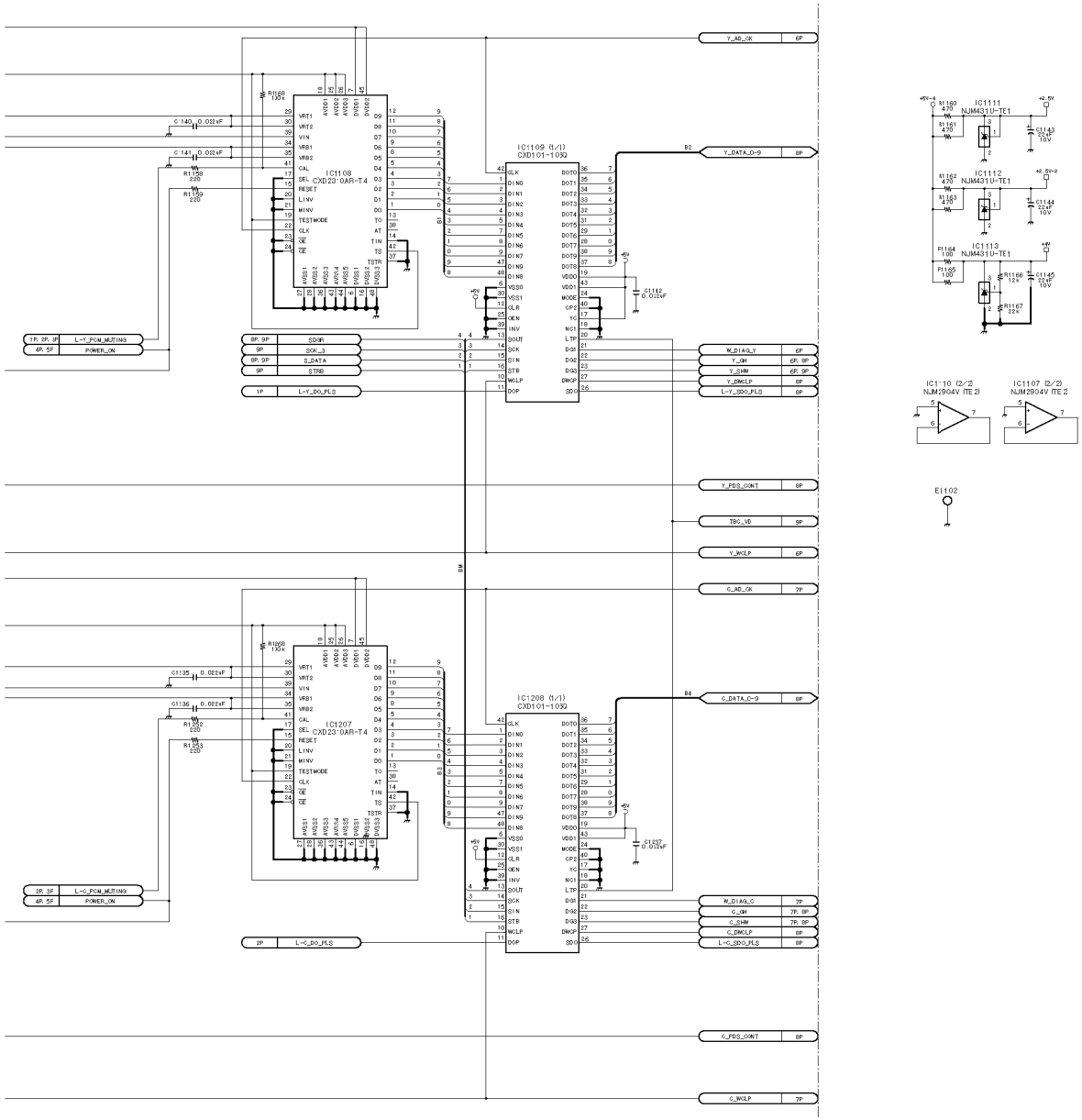

RF demodulator for analog Betacam PB, TBC

DM-114/114P (5/9)

BOARD NO. 1-667-547-13

LOT NO. 905-

DNW-A22)_DM-114_013

DM-114/114P (6/9)

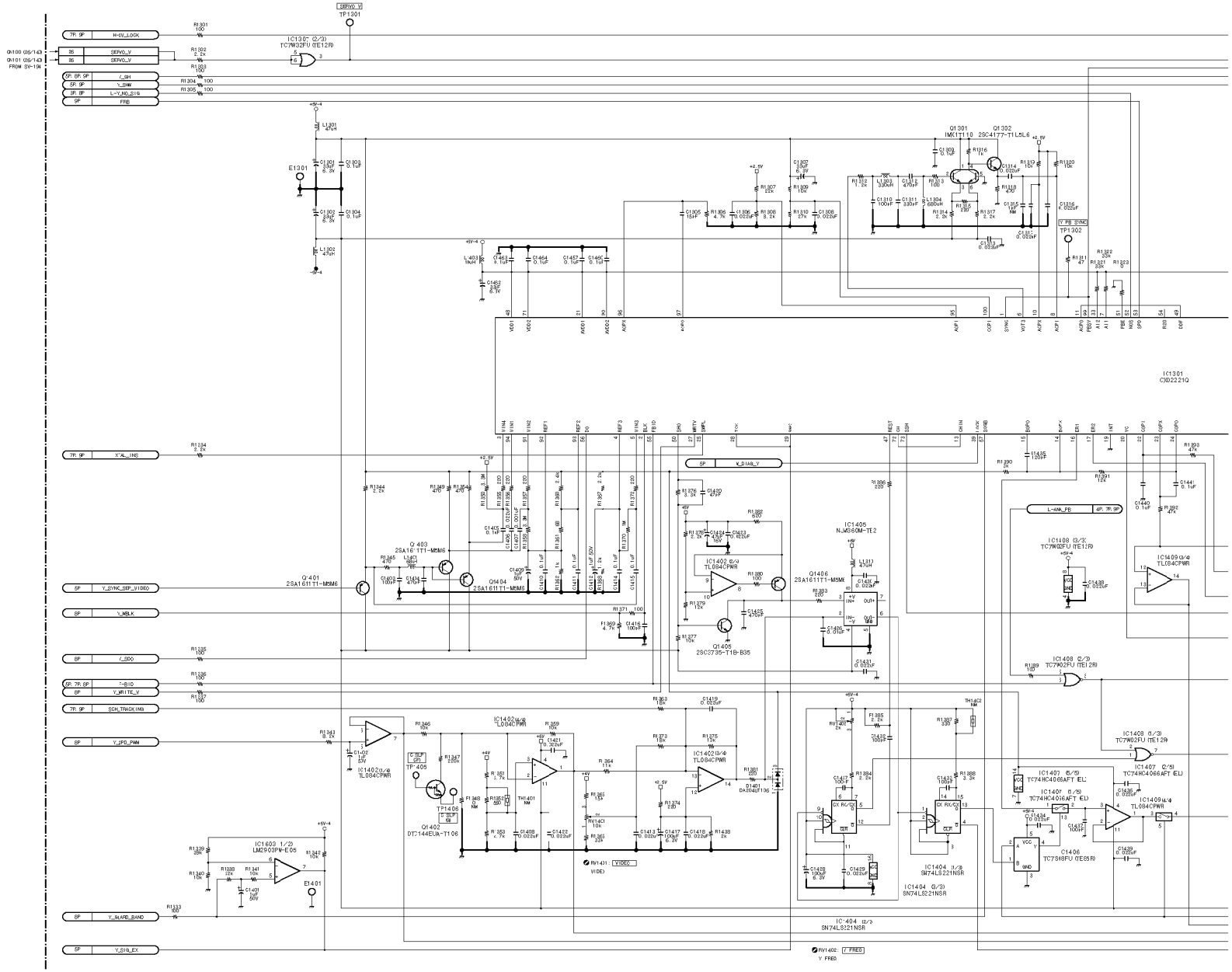

4-36

DNW-A28
DNW-A23P

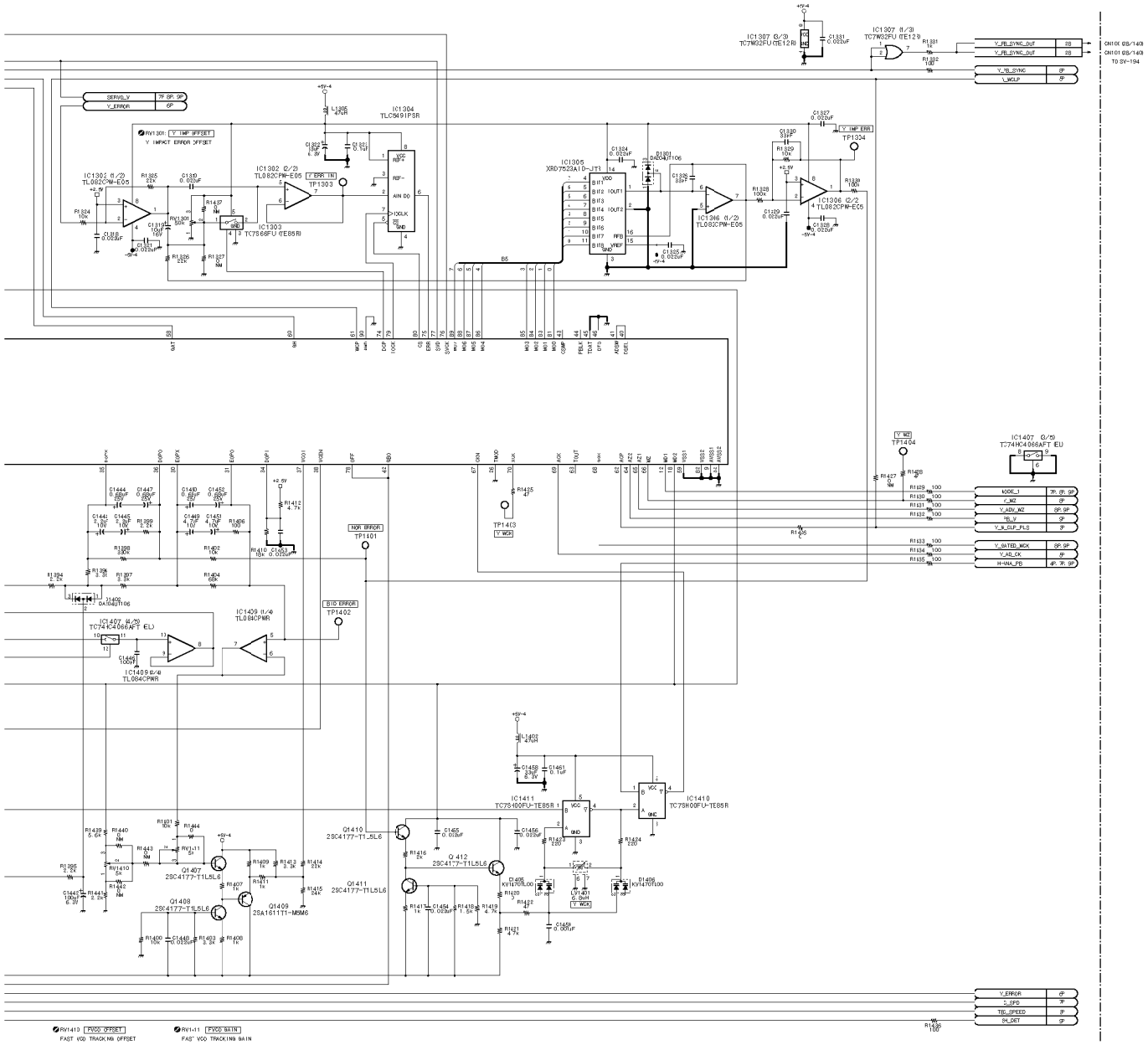
RF demodulator for analog Betacam PB, TBC
DM-114/114P (6/9)
BOARD NO. 1-667-547-13
LOT NO. 905-
DNW-A22)_DM-114_013
DNW-A28
DNW-A28P
4-37
4-37

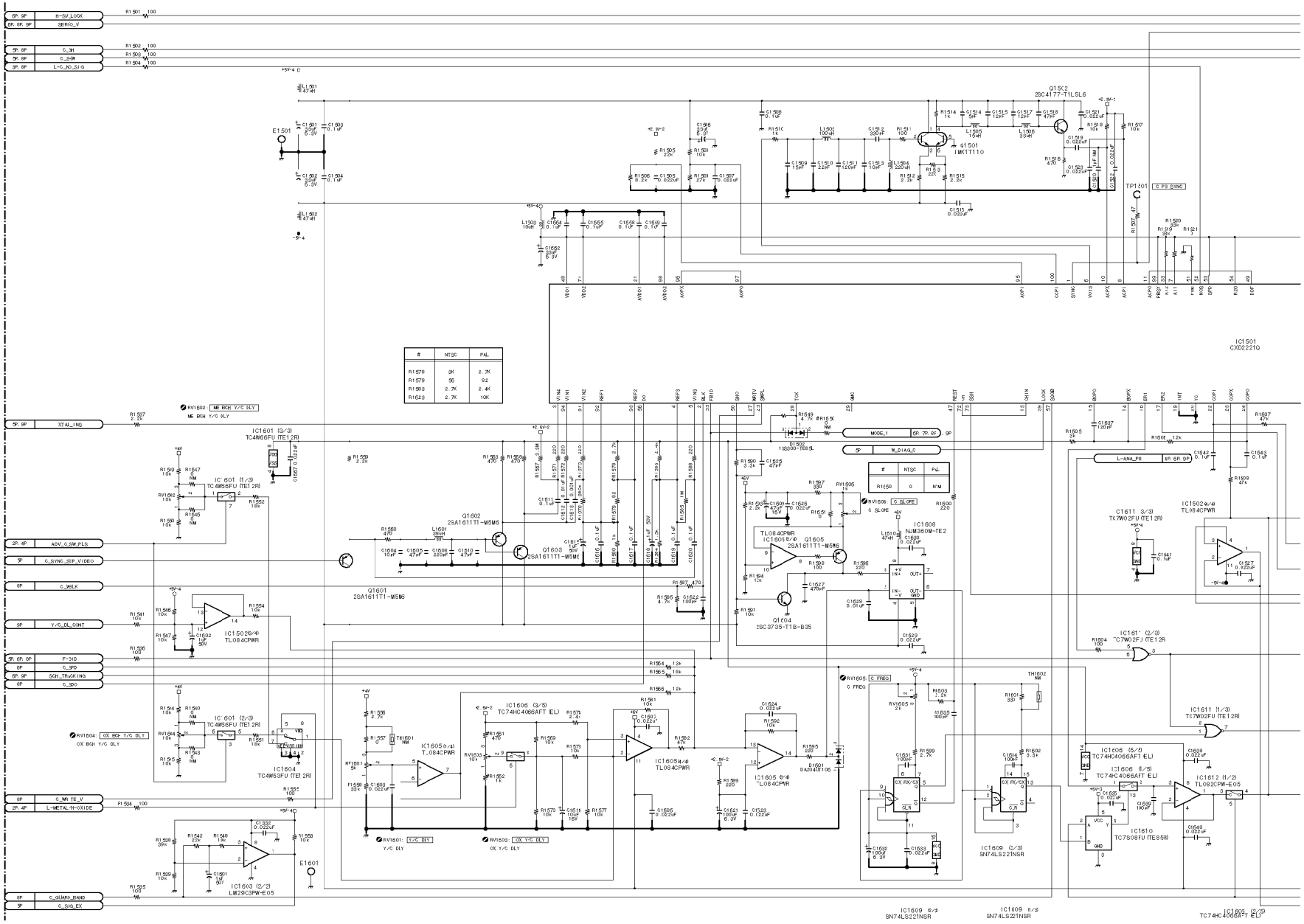

http://getMANUAL.com

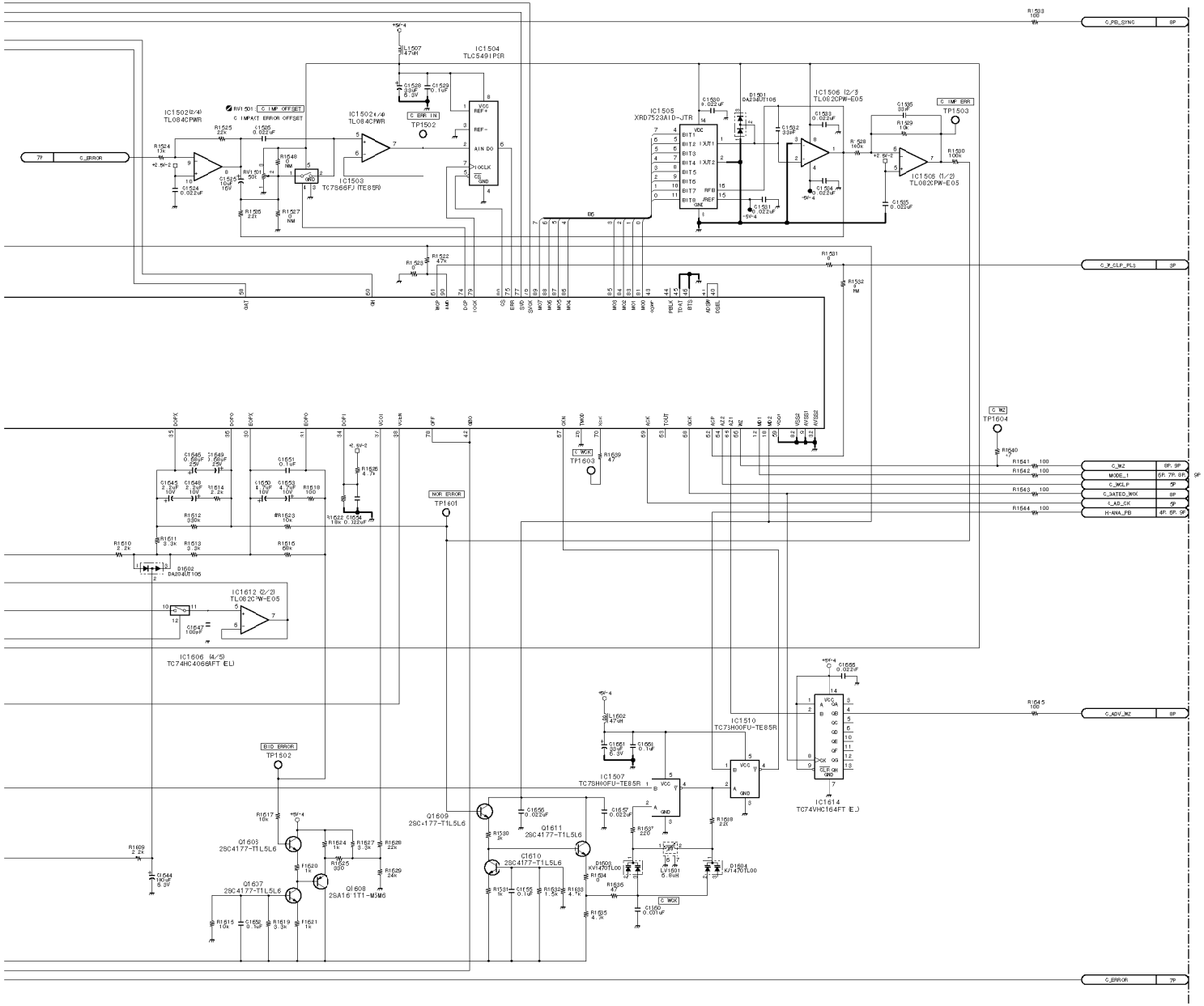

RF demodulator for analog Betacam PB, TBC

DM-114/114P (7/9)

BOARD NO. 1-667-547-13

LOT NO. 905-

DNW-A220_DM-114_013

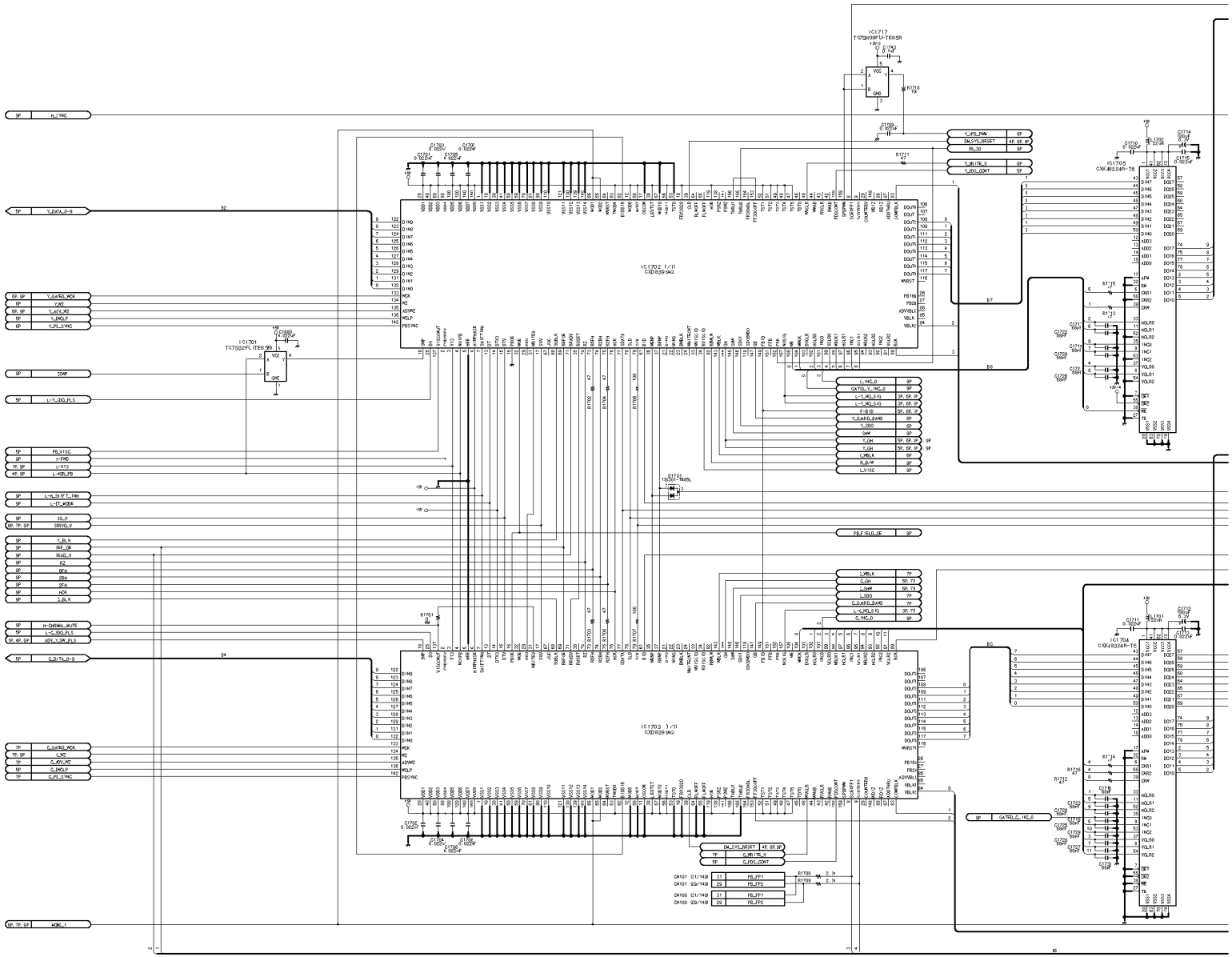

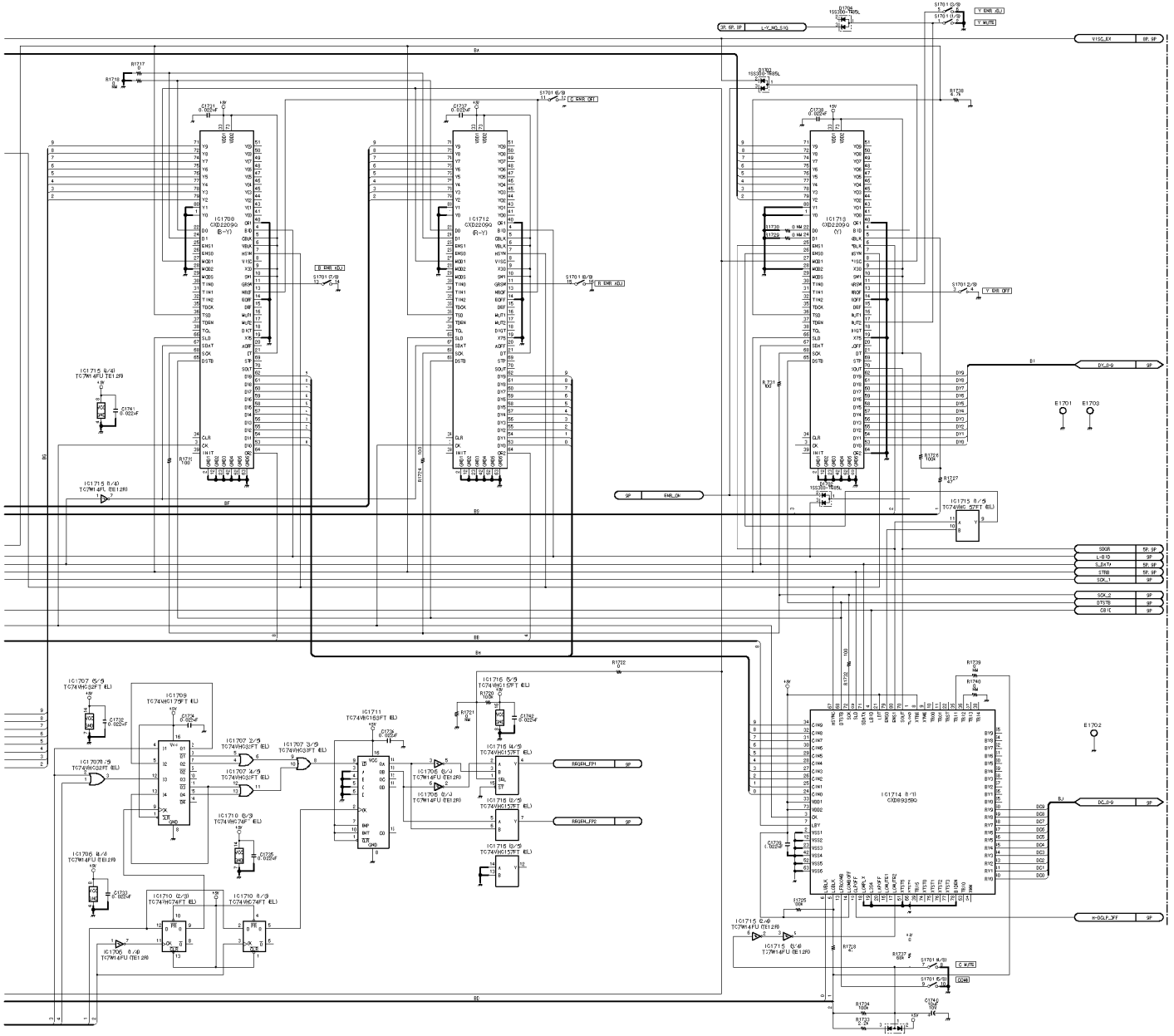

RF demodulator for analog Betacam PB, TBC

DM-114/114P (8/9)

BOARD NO. 1-667-547-13

LOT NO. 905-

DNW-A22)_DM-114_013

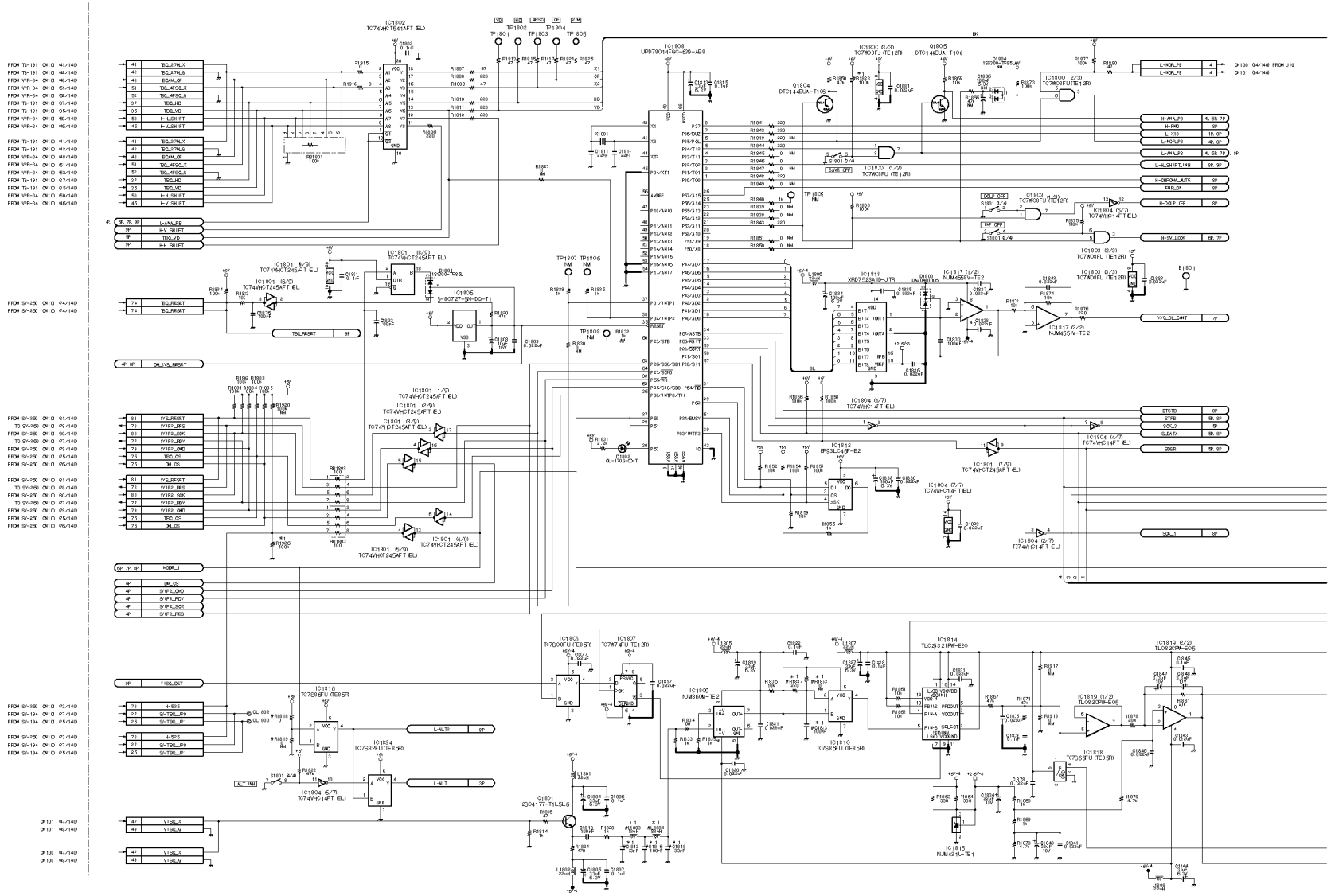

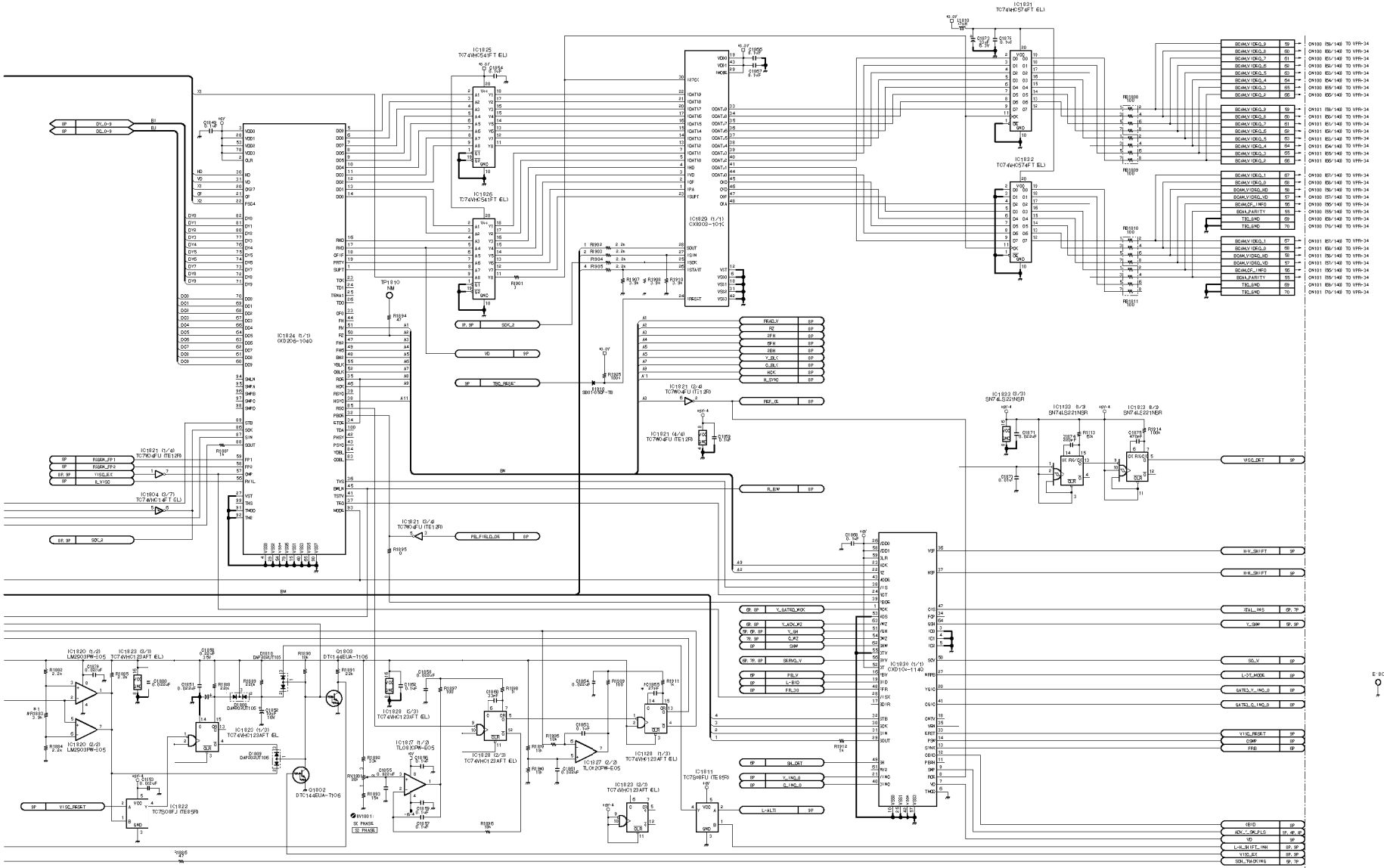

RF demodulator for analog Betacam PB, TBC

DM-114/114P (9/9)

BOARD NO. 1-667-547-13

LOT NO. 905-

DNW-A22)_DM-114_013

DPR-87 (1/6)

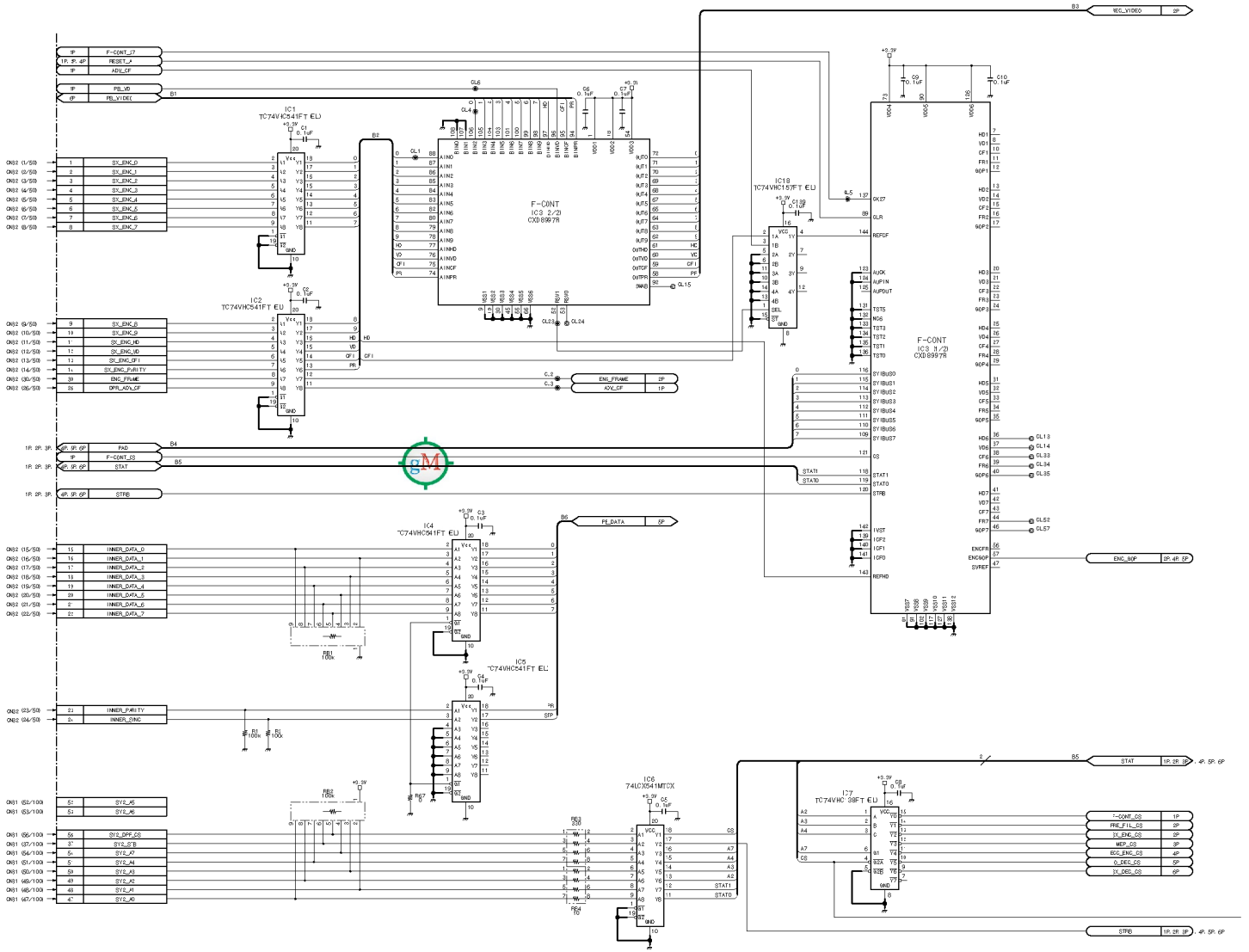

4-44

DNW-A28
DNW-A23P

DPR-87 (1/6)

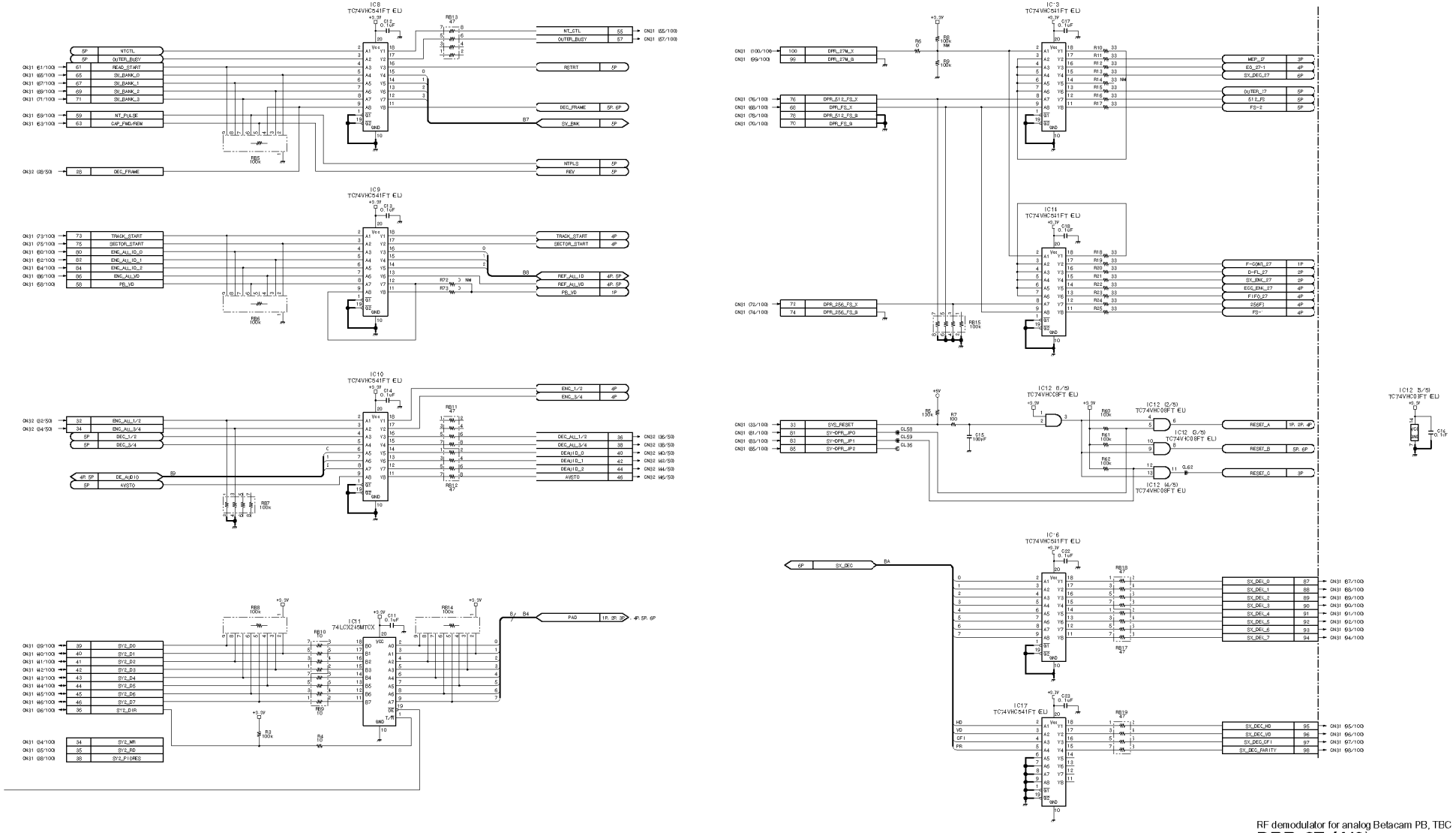

RF demodulator for analog Betacam PB, TBC

DPR-87 (1/6)

BOARD NO. 1-667-475-13
LOT NO. 905-

DNW-A22)_DPR-87_001

DPR-87 (2/6)

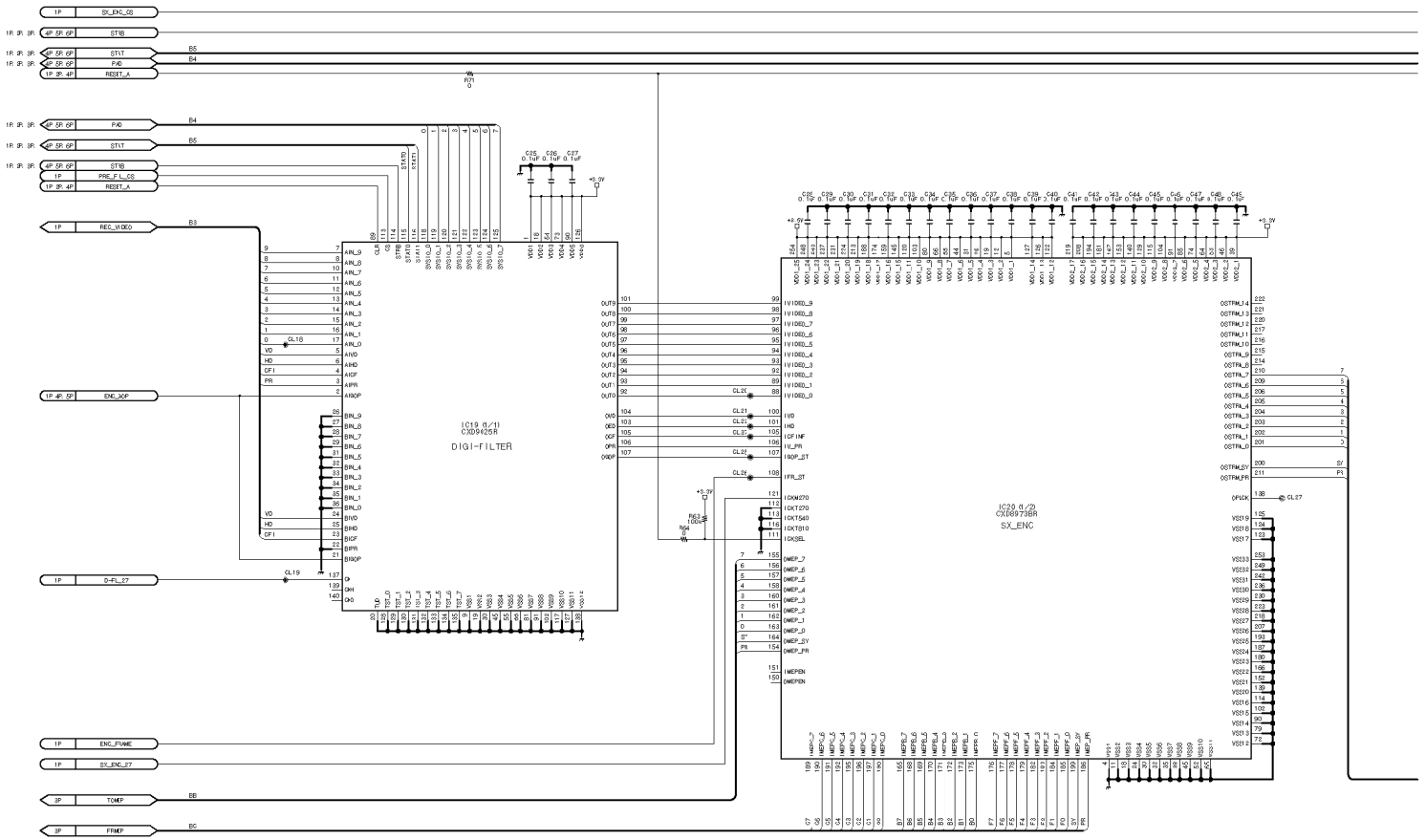

4-46

DNW-A28
DNW-A23P

DPR-87 (2/6)

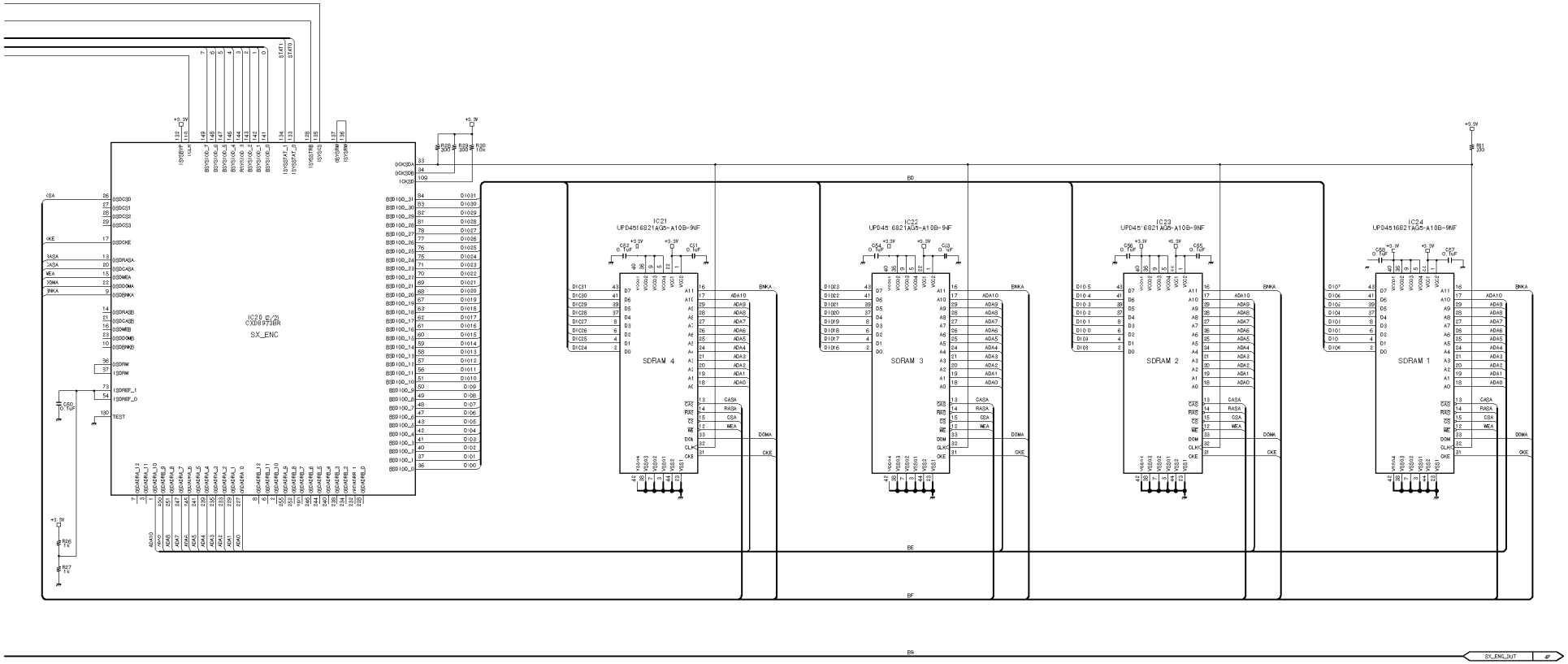

RF demodulator for analog Betacam PB, TBC

DPR-87 (2/6)

BOARD NO. 1-667-475-13

LOT NO. 905-

DNW-A22)_DPR-87_001

DPR-87 (3/6)

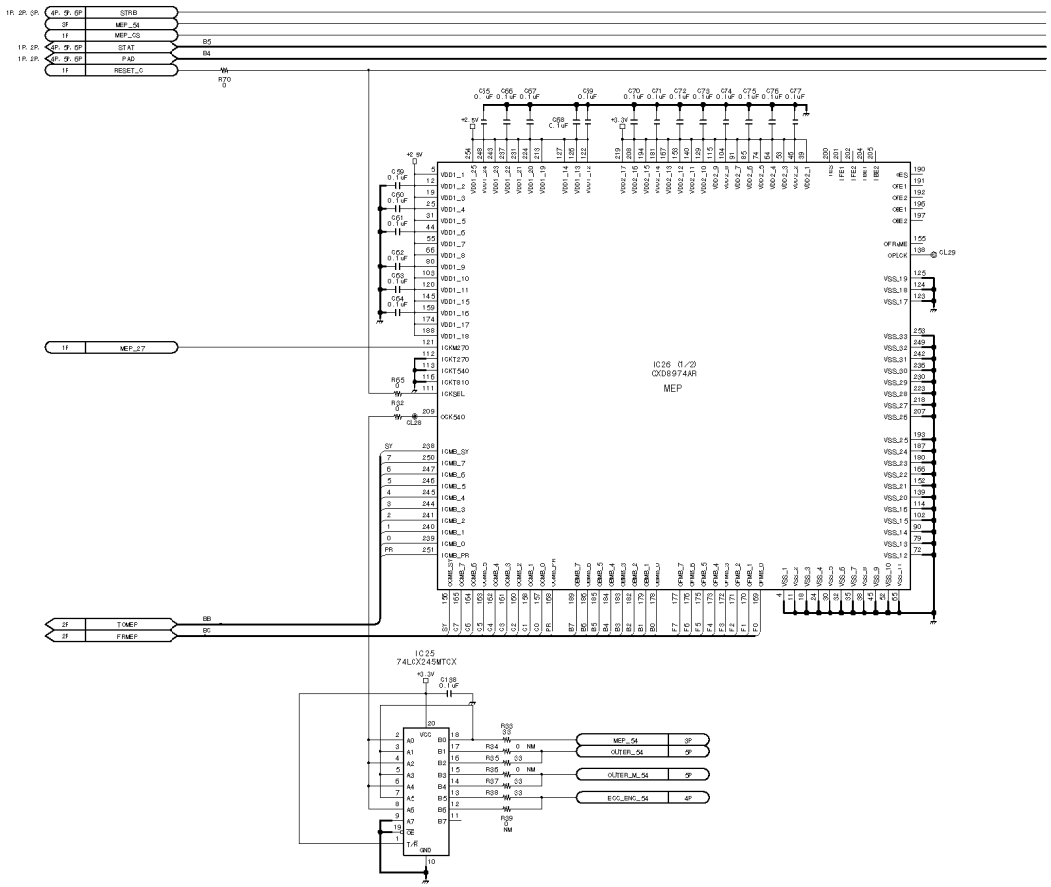

4-48

DNW-A28
DNW-A23P

http://getMANUAL.com

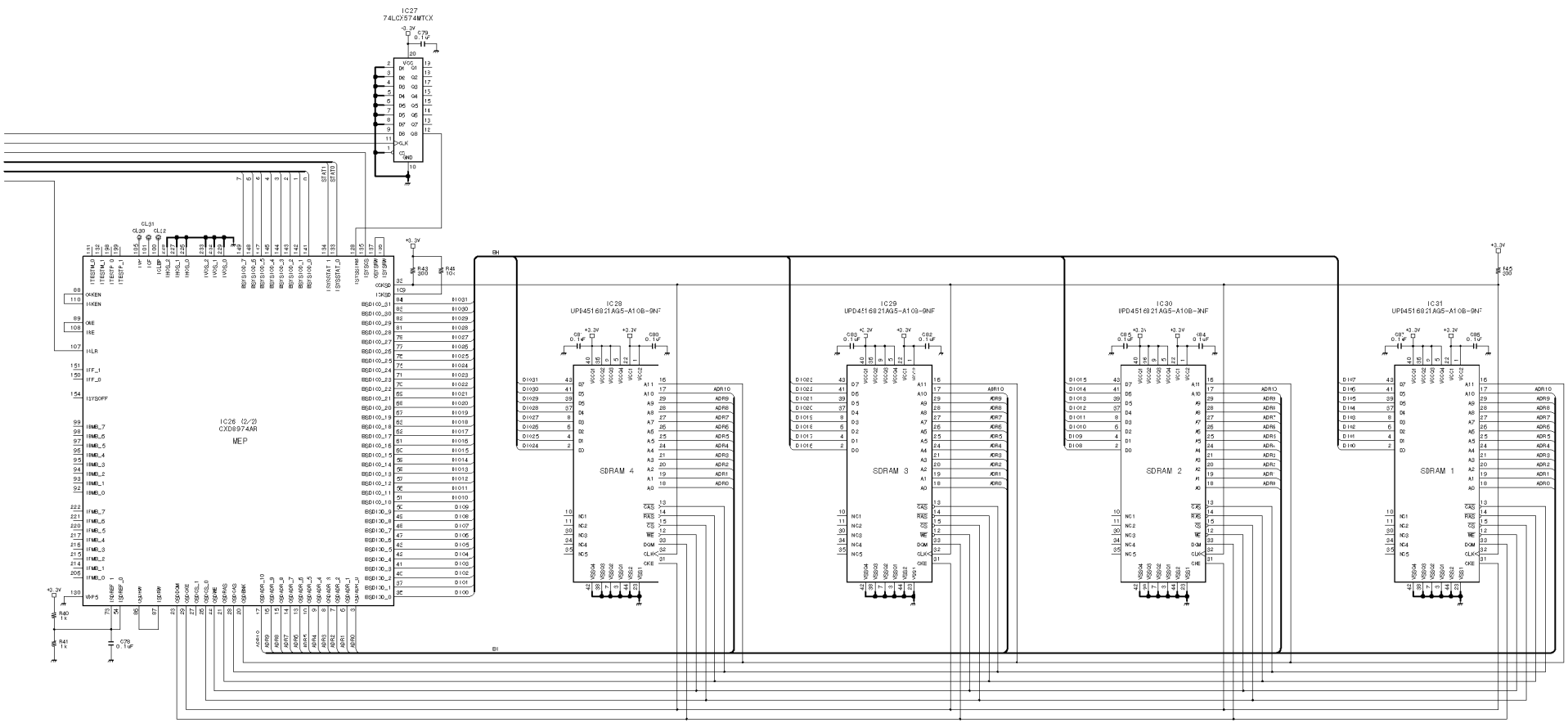

RF demodulator for analog Betacam PB, TBC

DPR-87 (3/6)

BOARD NO. 1-667-475-13

LOT NO. 905-

DNW-A220_DPR-87_001

DPR-87 (4/6)

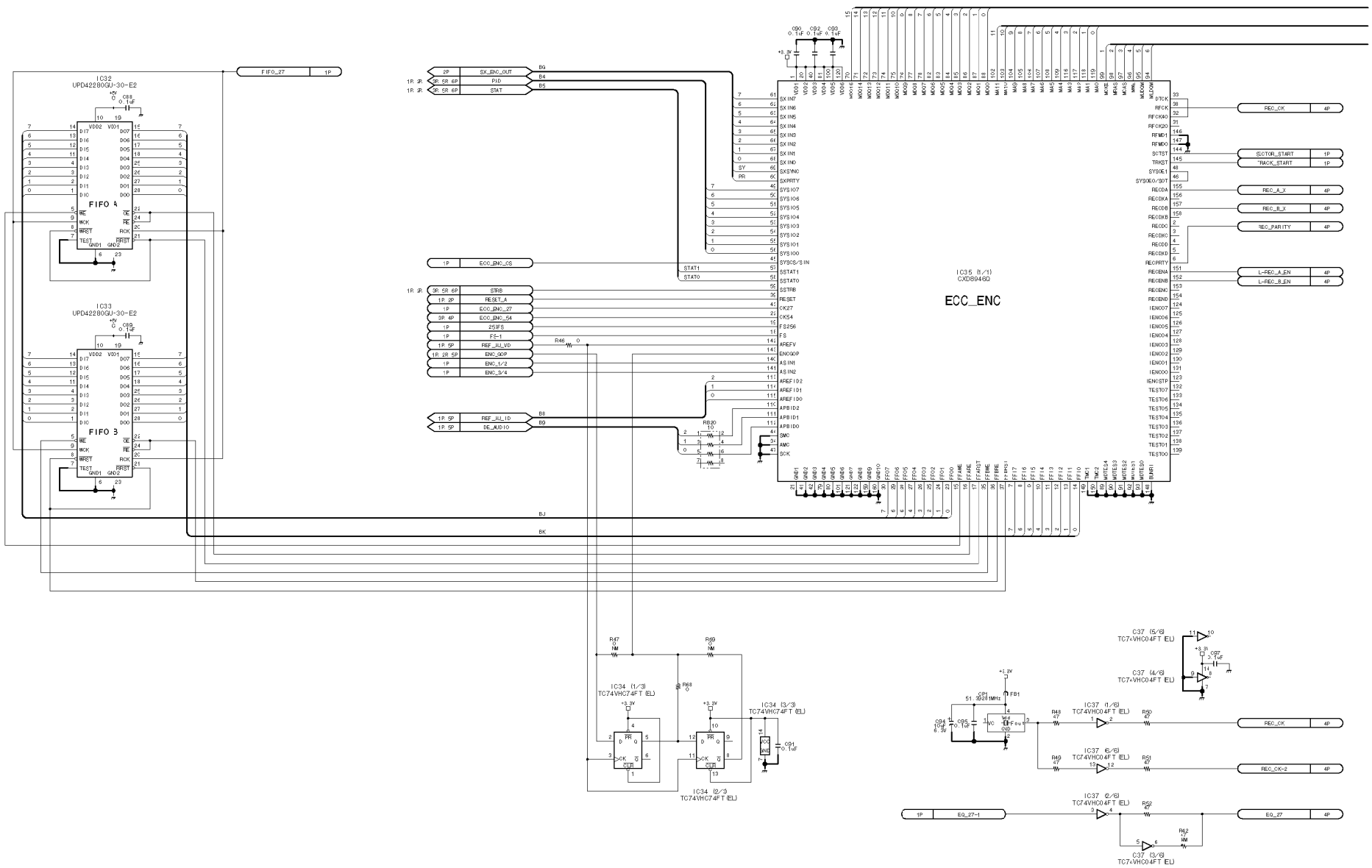

4-50

DNW-A28
DNW-A23P

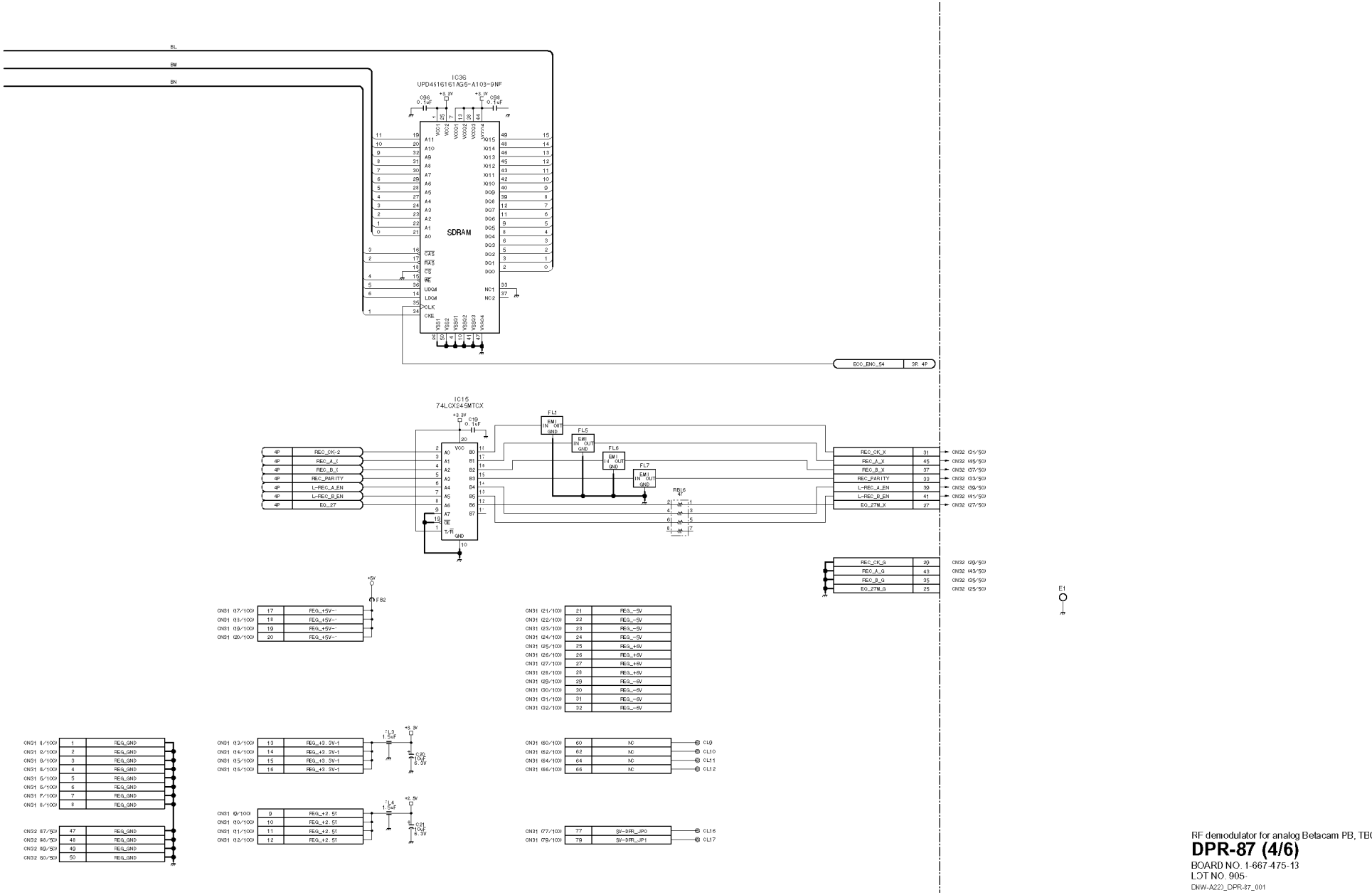

RF demodulator for analog Betacam PB, TBC

DPR-87 (4/6)

BOARD NO. 1-667-475-13

LOT NO. 905-

DNW-A22)_DPR-87_001

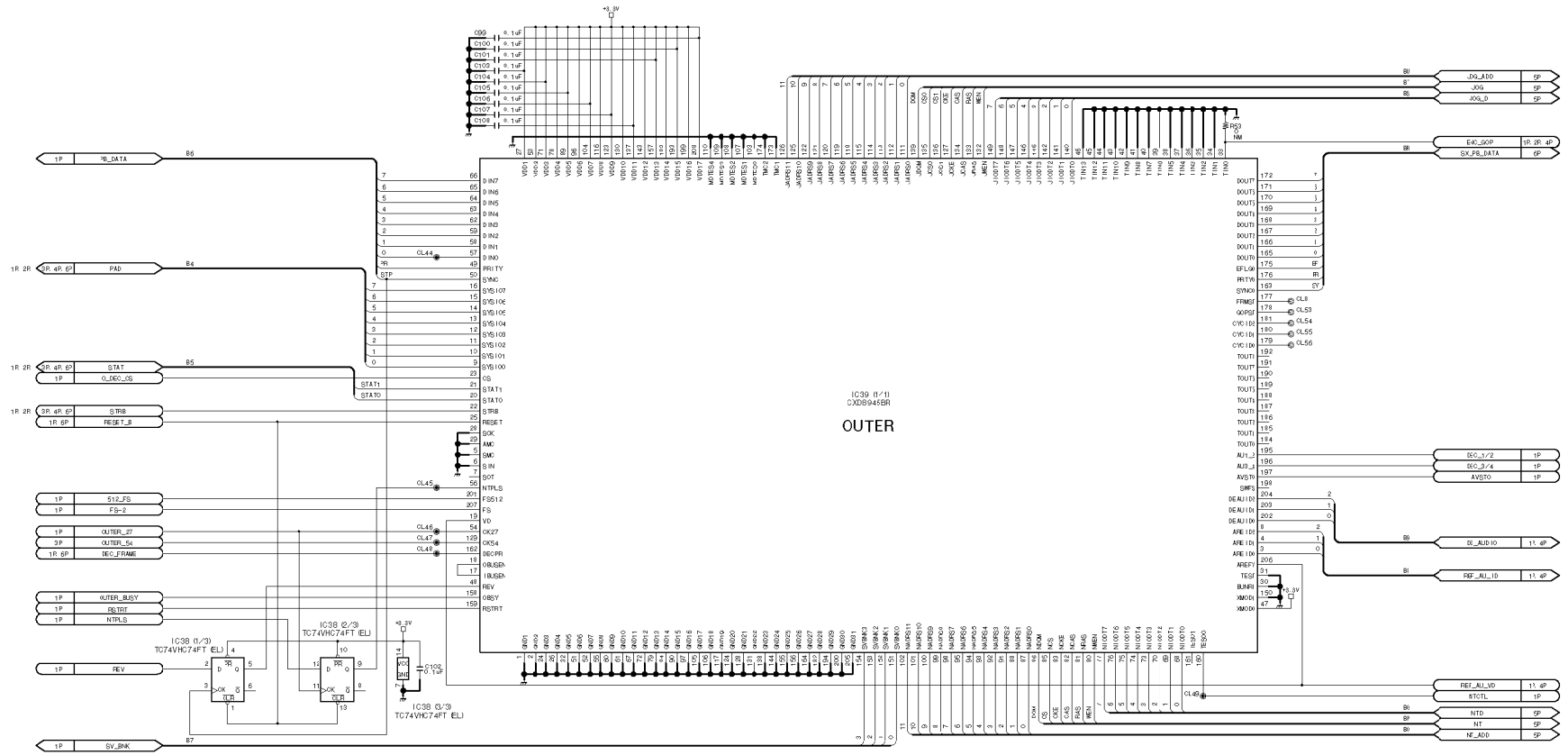
IC39 (1/1)
CXD8945BR
OUTER
IC38 (1/3)
TC74VHC74FT (EL)
IC38 (2/3)
TC74VHC74FT (EL)
IC38 (3/3)
TC74VHC74FT (EL)
PB_DATA
PAD
STAT
O_DEC_CS
STRB
RESET_B
512_FS
FS-2
OUTER_27
OUTER_54
DEC_FRAME
WUTER_BUSY
RSTRT
NTPLS
REV
SV_BNK
JOG_ADD
JOG
JOG_D
EXC_SOP
SX_PB_DATA
DEC_1/2
DEC_3/4
AVSTO
DE_AUDIO
REF_AU_10
REF_AU_VD
STCTL
NTD
NT
NF_ADD

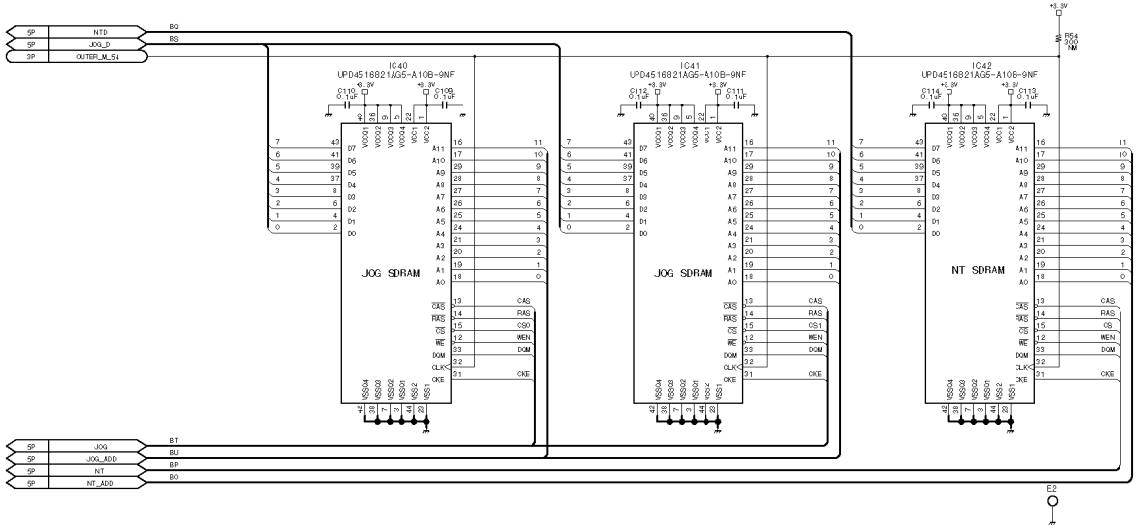

RF demodulator for analog Betacam PB, TBC

DPR-87 (5/6)

BOARD NO. 1-667-475-13

LOT NO. 905-

DNW-A22)_DPR-87_001

DPR-87 (6/6)

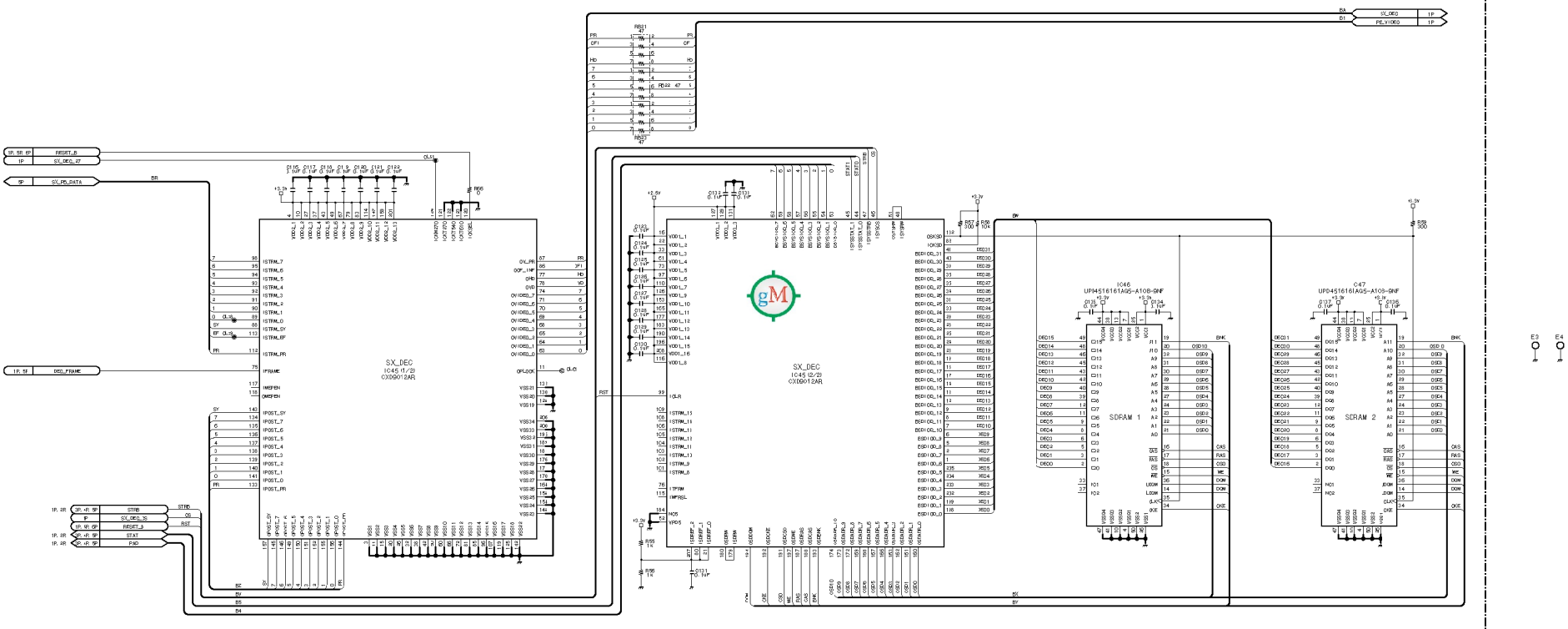

RF demodulator for analog Betacam PB, TBC

DPR-87 (6/6)

BOARD NO. 1-667-475-13
LCT NO. 905-
DNW-A220_DPR-87_001

4-54

DNW-A28
DNW-A23P

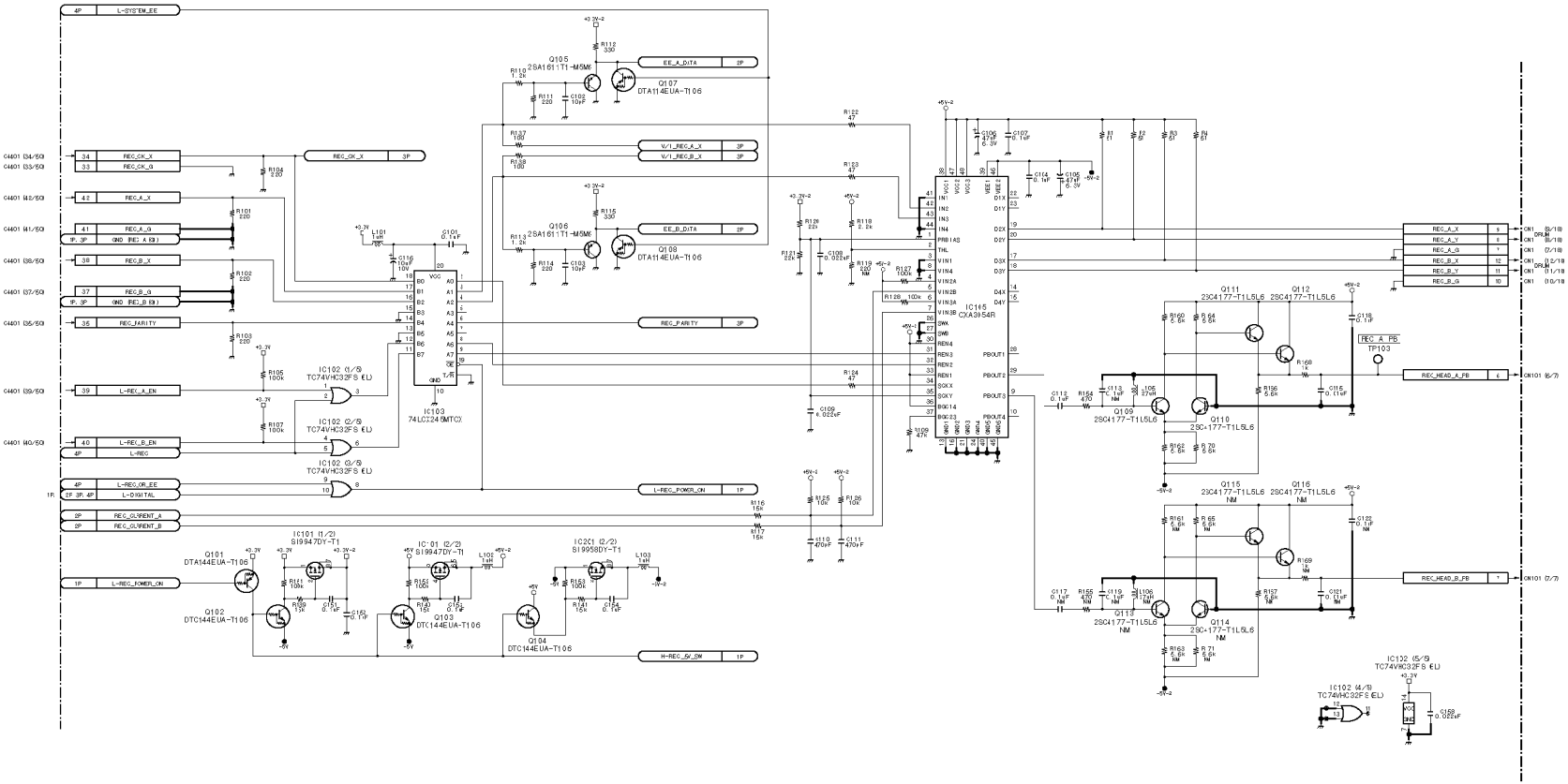

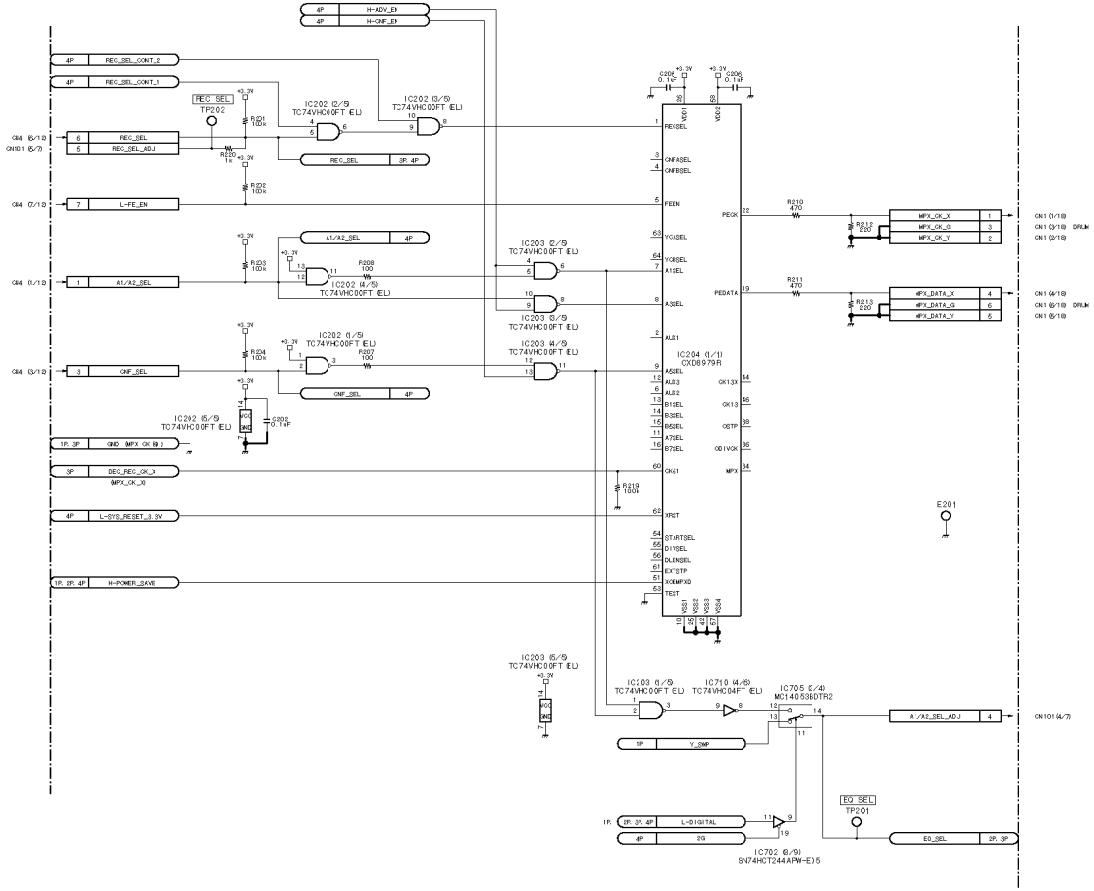

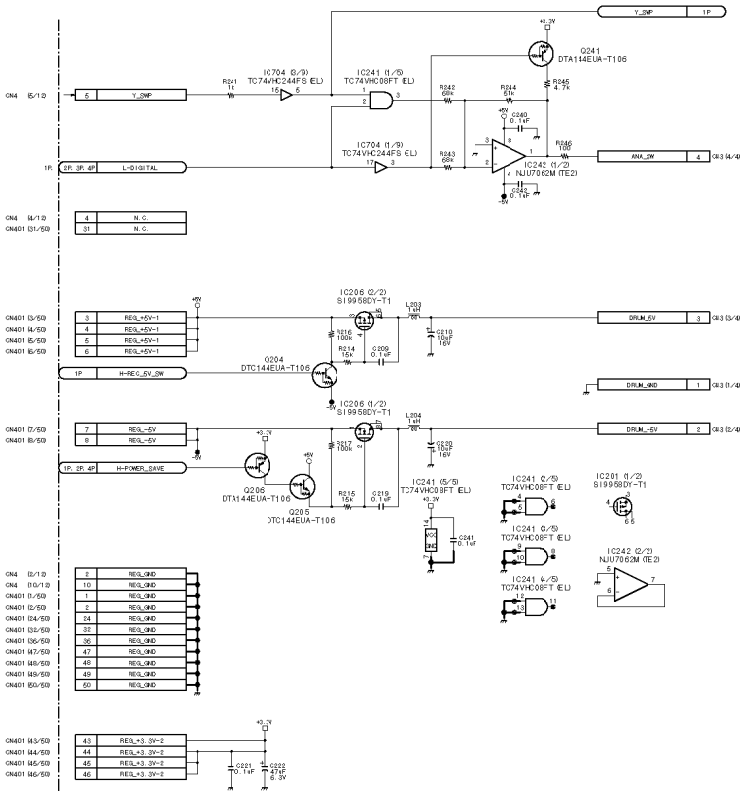

RF equalizer
REC current control, PB EQ, Analog Betacam FB buffer
Inner error correction

EQ-72 (1/4)

BOARD NO. 1-667-672-13
LOT NO. 905-
DNW-A220_EQ-72_001

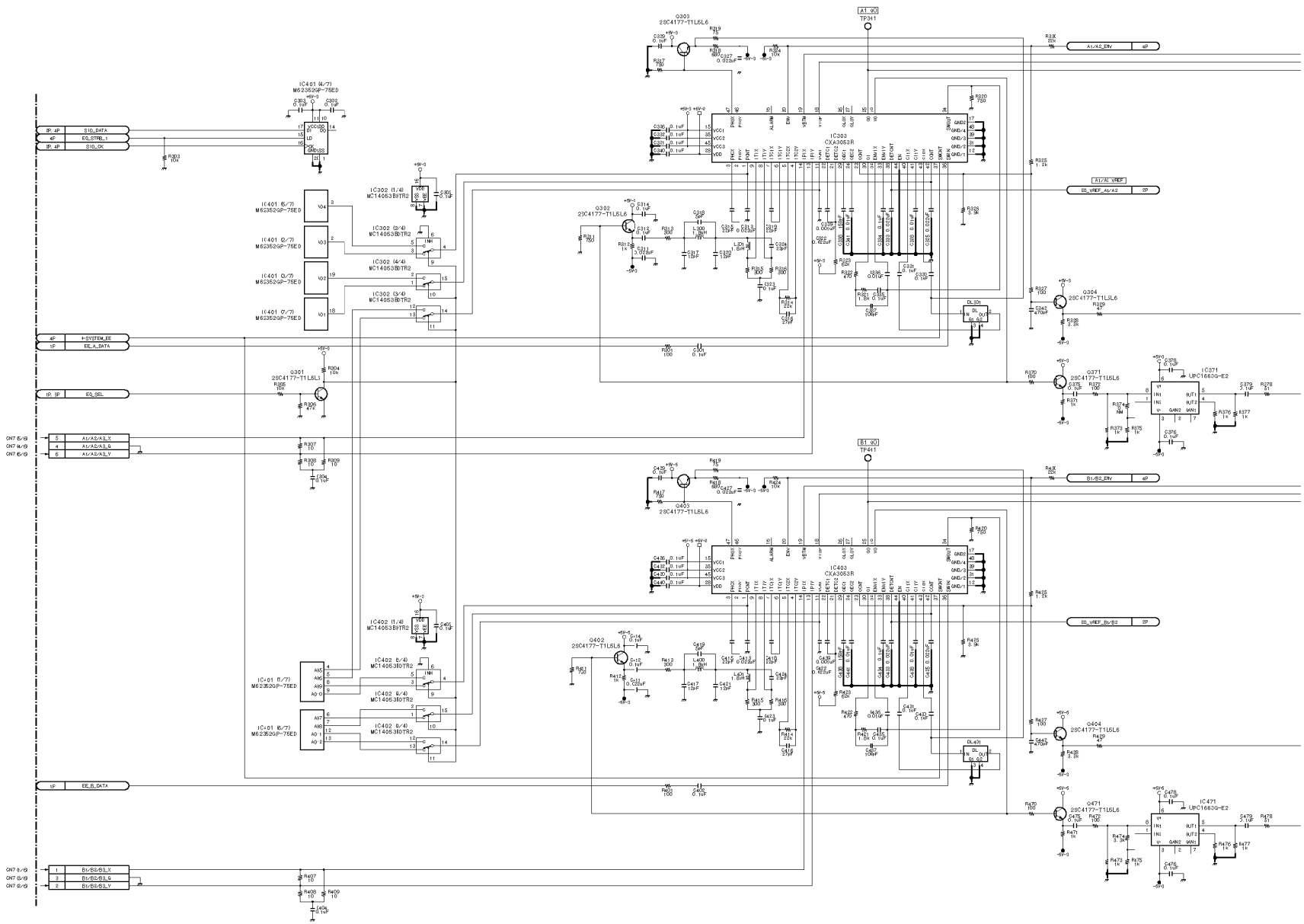

http://getMANUAL.com

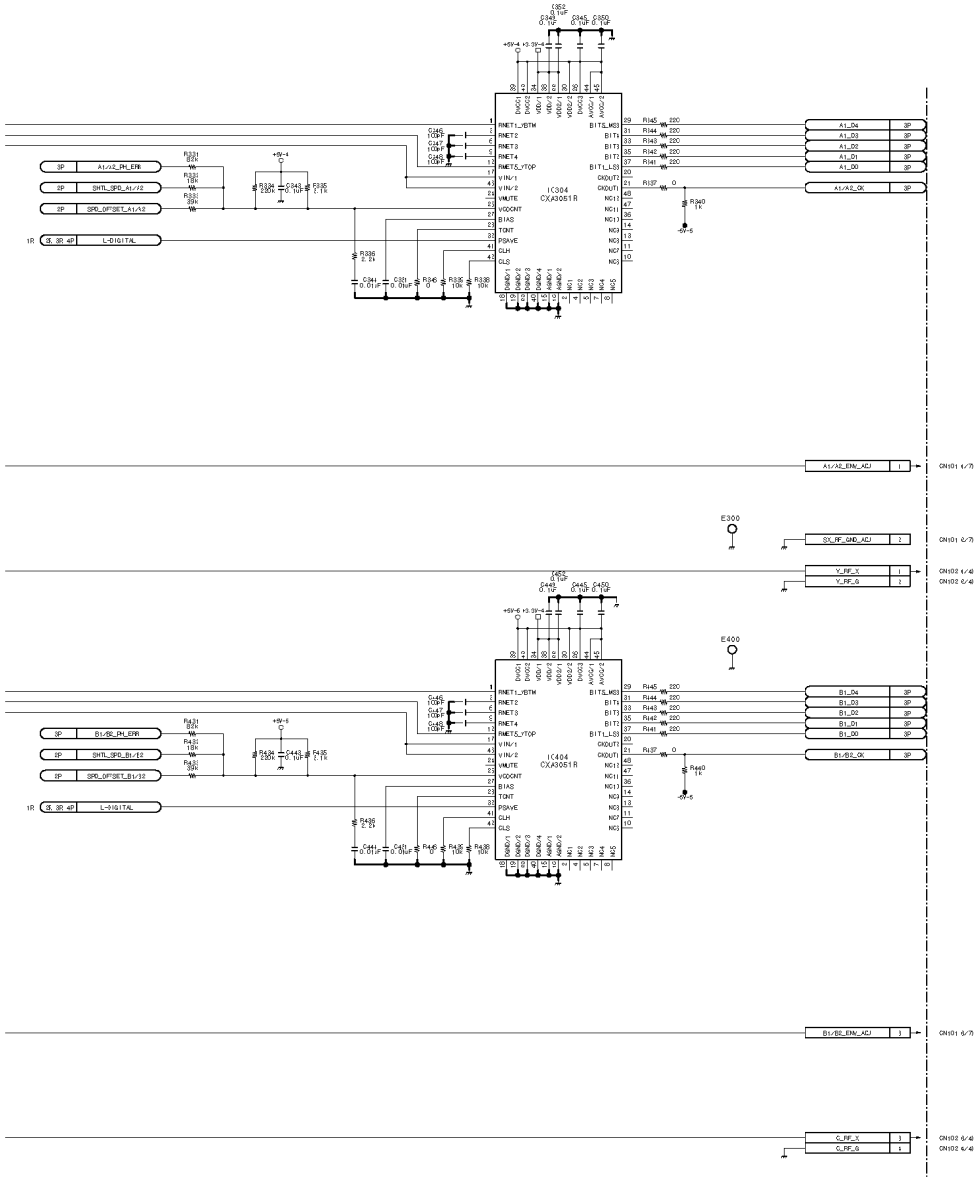

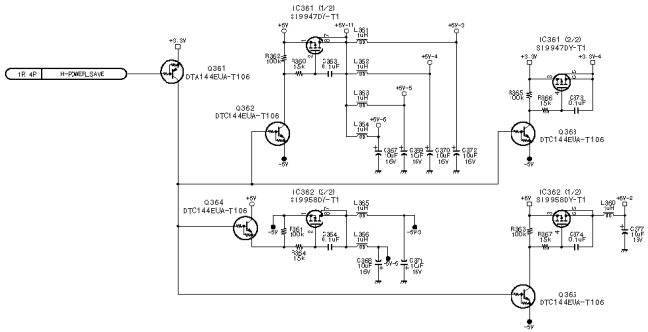

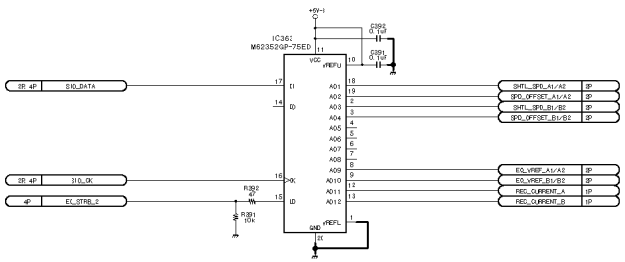

RF equalizer
REC current control, FB EQ, Anaog Betacam PB buffer
Inner error correction

EQ-72 (2/4)

BOARD NO. 1-667-672-13
LOT NO. 905-
DNW-A220_EQ-72_001

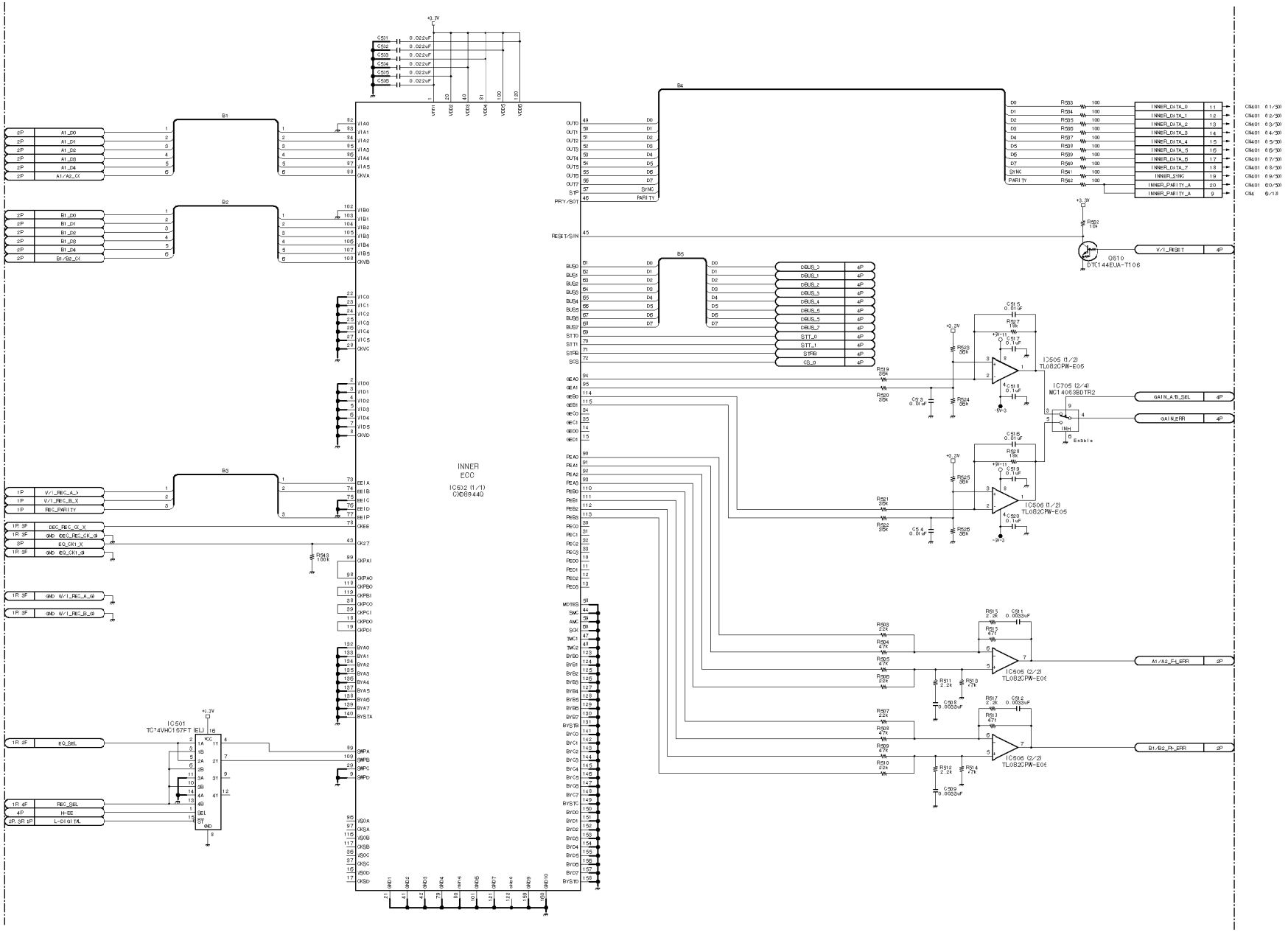
INNER
ECC
IC502 (1/1)
CXD8944Q
IC501
TC74VHC157FT (EL)
IC505 (1/2)
TL082CPW-E05
IC705 (2/4)
MC14053BDTR2
IC506 (1/2)
TL082CPW-E05
IC506 (2/2)
TL082CPW-E05
IC506 (2/2)
TL082CPW-E05
Q510
DTC144EUA-T106
INNER_DATA_0
INNER_DATA_1
INNER_DATA_2
INNER_DATA_3
INNER_DATA_4
INNER_DATA_5
INNER_DATA_6
INNER_DATA_7
INNERFLSYNC
INNER_PARITY_A
INNER_PARITY_A
V/I_RESET
GAIN_A/B_SEL
GAIN_ERR
A1/A2_FL_ERR
B1/B2_FL_ERR

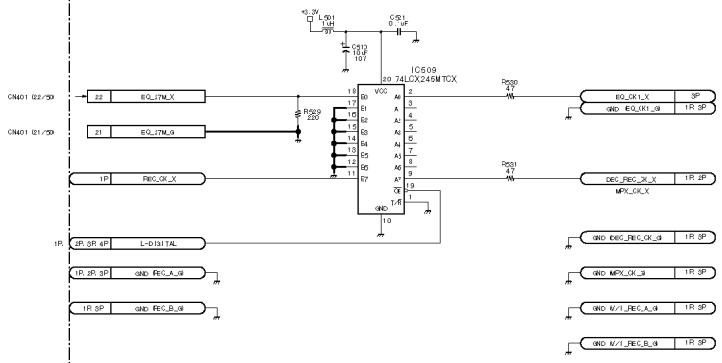

RF equalizer
REC current control, PB EQ, Analog Betacam FB buffer
Inner error correction

EQ-72 (3/4)

BOARD NO. 1-667-672-13
LOT NO. 905-
DNW-A220_EQ-72_001

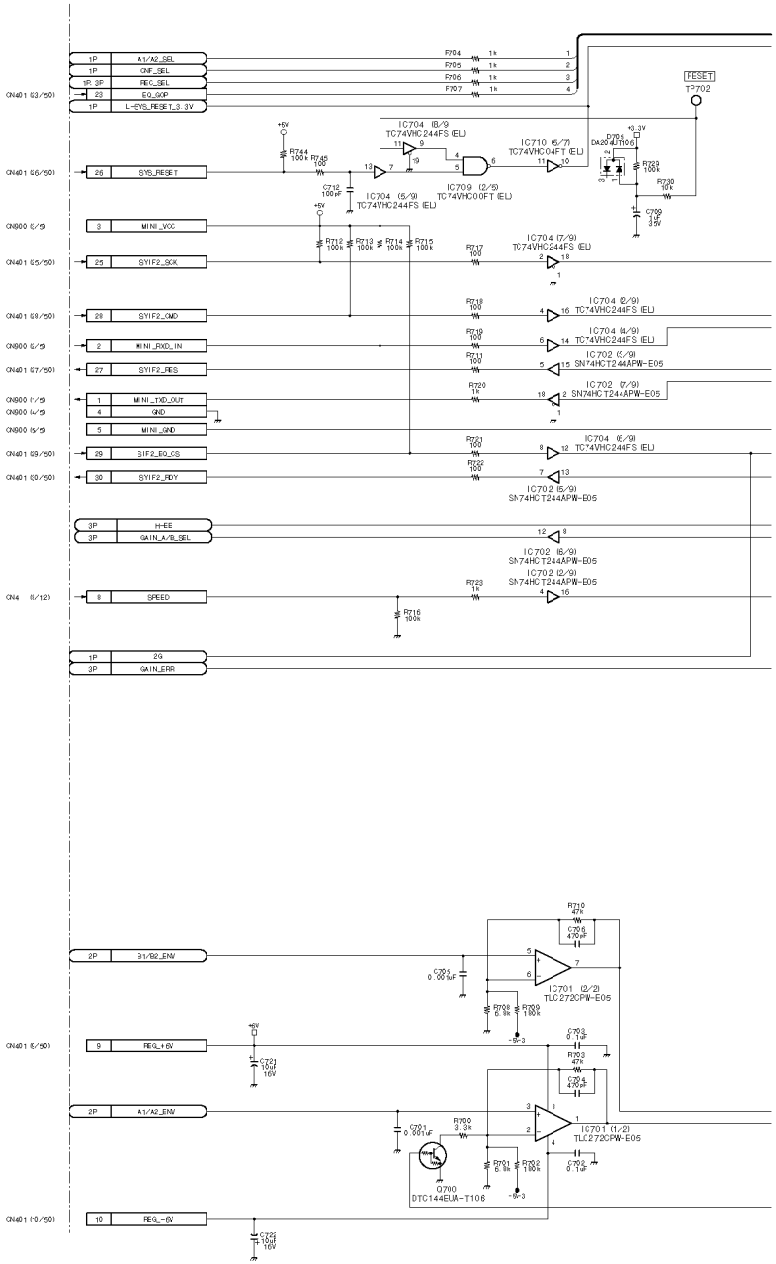
A1/A2_SEL
CNF_SEL
REC_SEL
EQ_SOP
L-EVS_RESET_3.3V
SYS_RESET
MINI_VCC
SYIF2_SCK
SYIF2_GND
MINI_RXD_IN
SYIF2_RES
MINI_TXD_OUT
GND
MINI_GND
SYIF2_EQ_CS
SYIF2_RDY
H-EE
GAIN_A/B_SEL
SPEED
2G
GAIN_ERR
A1/A2_ENV
REG_+6V
REG_-6V
RESET
IC704 (8/9) TC74VHC244FS (EL)
IC710 (6/7) TC74VHC04FT (EL)
IC709 (2/6) TC74VHC00FT (EL)
IC704 (5/9) TC74VHC244FS (EL)
IC704 (7/9) TC74VHC244FS (EL)
IC704 (2/9) TC74VHC244FS (EL)
IC704 (4/9) TC74VHC244FS (EL)
IC702 (6/9) SN74HCT244APW-E05
IC702 (7/9) SN74HCT244APW-E05
IC704 (6/9) TC74VHC244FS (EL)
IC702 (5/9) SN74HCT244APW-E05
IC702 (8/9) SN74HCT244APW-E05
IC702 (3/9) SN74HCT244APW-E05
IC701 (2/2) TLC272CPW-E05
IC701 (1/2) TLC272CPW-E05
Q700 DTC144EUA-T106

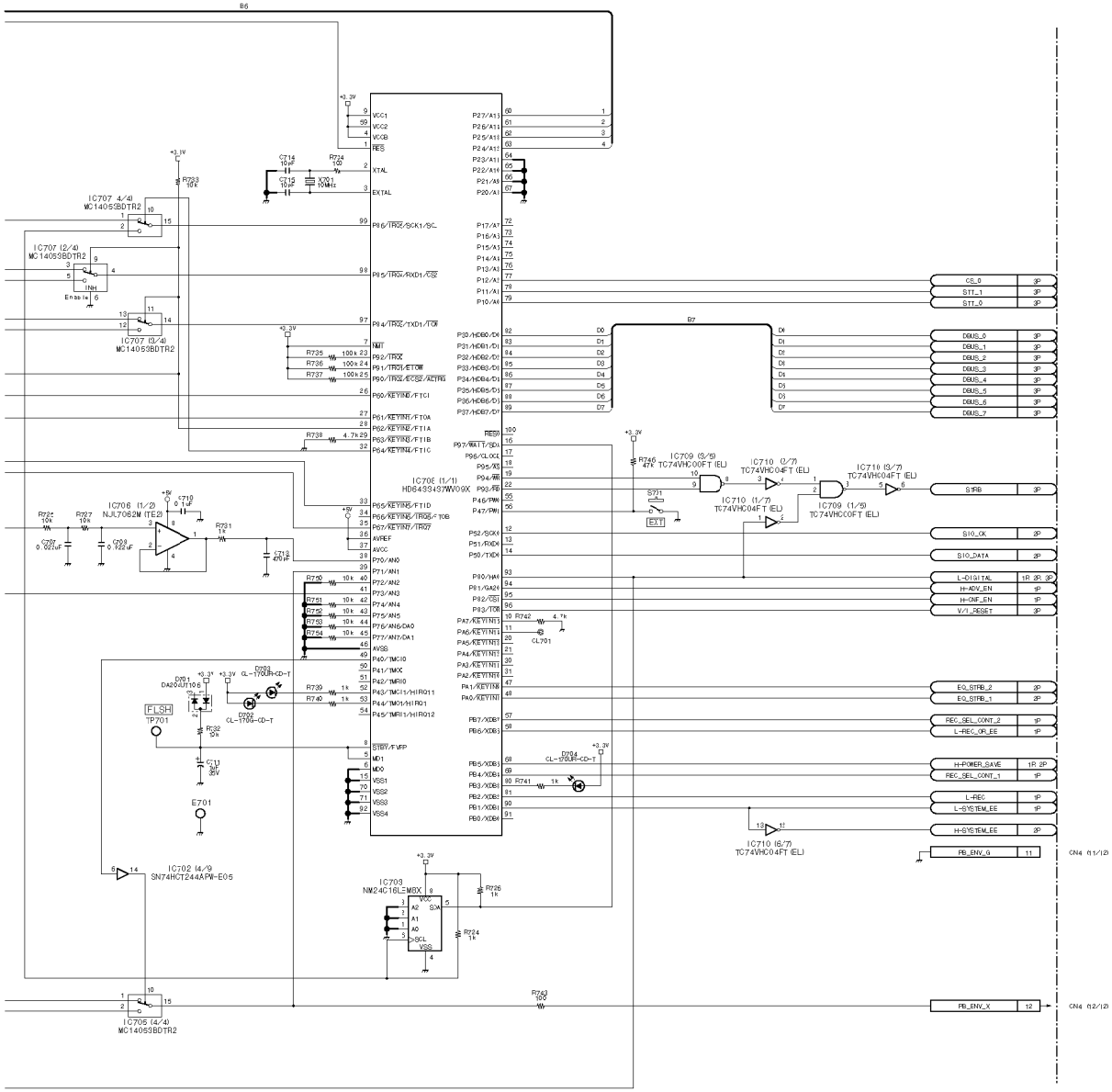

RF equalizer
REC current control, PB EQ, Analog Betacam FB buffer
Inner error correction

EQ-72 (4/4)

BOARD NO. 1-667-672-13
LOT NO. 905-
DNW-A220_EQ-72_001

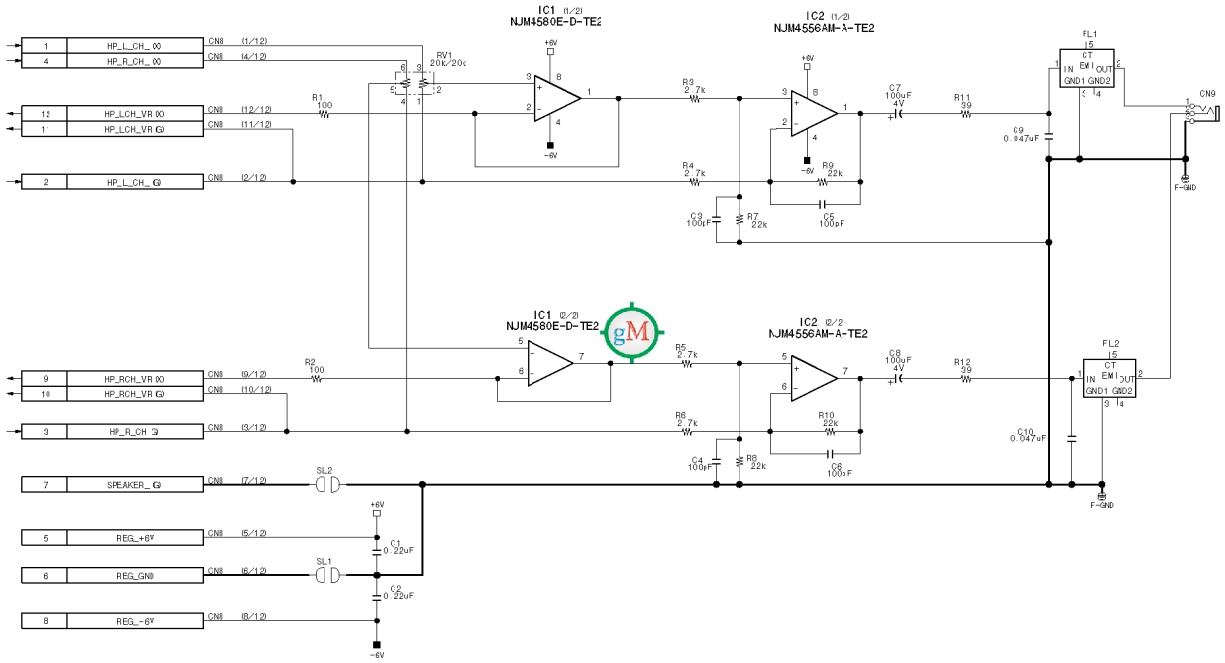

Headphones jack

HP-100

BOARD NO. 1-675-099-11, 12
LOT NO. 905-

DNW-A28_HP-100_011

EQ-72

CN401

DESTINATIONS		LEVEL	I/O		SIGNAL		SIGNAL	I/O	LEVEL	DESTINATIONS	
	RE-150		IN	1	REG_GND	2	REG_GND	IN			RE-150
	RE-150		IN	3	REG_+5V-1	4	REG_+5V-1	IN			RE-150
	RE-150		IN	5	REG_+5V-1	6	REG_+5V-1	IN			RE-150
	RE-150		IN	7	REG_-5V	8	REG_-5V	IN			RE-150
	RE-150		IN	9	REG_+6V	10	REG_-6V	IN			RE-150
CN32-15	DPR-87	+3.3V	OUT	11	INNER_DATA_0	12	INNER_DATA_1			CN32-16	DPR-87
CN32-17	DPR-87	+3.3V	OUT	13	INNER_DATA_2	14	INNER_DATA_3			CN32-18	DPR-87
CN32-19	DPR-87	+3.3V	OUT	15	INNER_DATA_4	16	INNER_DATA_5			CN32-20	DPR-87
CN32-21	DPR-87	+3.3V	OUT	17	INNER_DATA_6	18	INNER_DATA_7			CN32-22	DPR-87
CN32-24	DPR-87	+3.3V	OUT	19	INNER_SYNC	20	INNER_PARITY			CN32-23	DPR-87
CN32-25	DPR-87		IN	21	EQ_27M_G	22	EQ_27M_X			CN32-27	DPR-87
CN52-38	TC-191	+3.3V	IN	23	EQ_OOP	24	REG_GND			CN101-80	
CN21-97	SY-260	+5V	IN	25	SIF2_SCK	26	SYS_RESET			CN21-33	ISY-260I
CN21-99	SY-260	+5V	OUT	27	SIF2_RES	28	SIF2_CMD			CN21-98	ISY-260I
CN21-95	SY-260	+5V	IN	29	SIF2_EQ_CS	30	SIF2_RDY			CN21-100	ISY-260I
				31		32	REG_GND				
CN32-29	DPR-87		IN	33	REC_CK_G	34	REC_CK_X			CN32-31	DPR-87
CN32-33	DPR-87	+3.3V	IN	35	REC_PARITY	36	REG_GND				
CN32-35	DPR-87		IN	37	REC_B_G	38	REC_B_X			CN32-37	DPR-87
CN32-39	DPR-87	+3.3V	IN	39	L-REC_A_EN	40	L-REC_B_EN			CN32-41	DPR-87
CN32-43	DPR-87		IN	41	REC_A_G	42	REC_A_X			CN32-45	DPR-87
	RE-150		IN	43	REG_+3.3V-2	44	REG_+3.3V-2	IN			RE-150
	RE-150		IN	45	REG_+3.3V-2	46	REG_+3.3V-2	IN			RE-150
	RE-150		IN	47	REG_GND	48	REG_GND	IN			RE-150
	RE-150		IN	49	REG_GND	50	REG_GND	IN			RE-150

SW-21

CN201

DESTINATIONS		LEVEL	I/O	SIGNAL		SIGNAL		I/O	LEVEL	DESTINATIONS	
CN42-26	(VPR-34...MB...DP-265)	+3.3V	IN	D_OUT_2	1	D_OUT_3	2	IN	+3.3V	CN42-25	(VPR-34...MB...DP-265)
CN42-24	(VPR-34...MB...DP-265)	+3.3V	IN	D_OUT_4	3	D_OUT_5	4	IN	+3.3V	CN42-23	(VPR-34...MB...DP-265)
CN42-22	(VPR-34...MB...DP-265)	+3.3V	IN	D_OUT_6	5	D_OUT_7	6	IN	+3.3V	CN42-21	(VPR-34...MB...DP-265)
CN42-20	(VPR-34...MB...DP-265)	+3.3V	IN	D_OUT_8	7	D_OUT_9	8	IN	+3.3V	CN42-19	(VPR-34...MB...DP-265)
CN42-16	(VPR-34...MB...DP-265)	+3.3V	IN	D_OUT_CFC	9	D_OUT_HD	10	IN	+3.3V	CN42-15	(VPR-34...MB...DP-265)
CN51-21	(TG-191...MB...DP-265)	+3.3V	IN	CHAR_27M_3	11	EXT_DC_IN	12				(RE...MB...CN...DP264)
CN11-89	(SY-259)	+5V	IN	CHAR_SIG_3_X	13	CHAR_FRAME_D_X	14	+5V	IN	CN11-93	(SY-259)
				UNREG_GND	15	UNREG_GND	16				
				UNREG_+12V	17	UNREG_+12V	18				
				REG_+5V-2	19	REG_+5V-2	20				
				REG_GND	21	REG_GND	22				
				REG_-5V	23	SIF1_RES	24	+5V	OUT	CN11-87	(SY-259)
CN11-85	(SY-259)	+5V	IN	SIF1_CMD	25	SIF1_KY2	26	+5V	IN	CN11-83	(SY-259)
CN11-81	(SY-259)	+5V	OUT	SIF1_RDY	27	SIF1_CK	28	+5V	IN	CN11-79	(SY-259)
CN11-99	(SY-259...MB...KY)	+5V	OUT	KEY_RX	29	KEY_TX	30	+5V	IN	CN11-97	(SY-259)

PA-218

CN204

7	BCAM_CH-1_X-AU	CN91-99
6	BCAM_CH-1_G-AU	CN91-100
5	BCAM_CH-2_G-AU	CN91-98
4	BCAM_CH-2_X-AU	CN91-97
3	REG_+6V	
2	REG_-6V	
1	AUDIO_GND	

PSW-63

TO RE-150&APR-27A

CN1

1	POWER_SW	CN82-45, CN900-100
2	REG_GND	

CP-354

CN702

1	REG_+5V-1	
2	REG_GND	
3	REG_-5V	

AUX

TO SY-259B

CN704

1	COM_RX	CN12-44
2	COM_TX	CN12-43
3	REG_GND	
4	CTS	CN12-25
5	RTS	CN12-26

RE-150

TO SY-194

CN201

1	UNREG_GND	
2	UNREG_GND	
3	UNREG_+12V	
4	UNREG_+12V	
5	REG_+6V	
6	REG_+5V-1	
7	REG_+5V-1	
8	REG_+3.3V-2	
9	REG_-5V	
10	REG_-6V	
11	REG_GND	
12	AUDIO_GND	

HP-100

CN8

1	HP_L_CH_X	CN91-86
2	HP_L_CH_G	CN91-85
3	HP_R_CH_G	CN91-91
4	HP_R_CH_X	CN91-92
5	REG_+6V	
6	REG_GND	
7	H-POWER_OFF_MUTTING	
8	REG_-6V	
9	HP_R_CH_VR_J	CN91-94
10	HP_R_CH_VR_S	CN91-93
11	HP_L_CH_VR_S	CN91-87
12	HP_L_CH_VR_J	CN91-88

CP-344

CN600

1	REG_+6V	
2	PHANTOM_+48V	CN900-16
3	REG_GND	
4	REG_-6V	

CP-344

TO AU-249

CN601

1	MON_L_CH_OUT_X	CN91-46
2	MON_L_CH_OUT_G	CN91-45
3	MON_R_CH_OUT_G	CN91-49
4	MON_R_CH_OUT_X	CN91-50
5	AU_+12V	CN82-5
6	H-POWER_OFF_MUTTING	CN82-14
7	AU_GND	CN82-6
8	AU_+12V	CN82-4
9	CH2/4_OUT_X	CN91-36
10	CH2/4_OUT_G	CN91-35
11	CH1/3_OUT_G	CN91-39
12	CH1/3_OUT_X	CN91-40

CP-354

CN700

1	INPUT_VIDEO_X	CN72-45
2	INPUT_VIDEO_G	CN72-46
3	REG_GND	
4	REF_VIDEO_X	CN52-46
5	REF_VIDEO_G	CN52-45
6	REG_GND	
7	VIDEO_OUT_1_X	CN42-45
8	VIDEO_OUT_1_G	CN42-46
9	VIDEO_OUT_2_X	CN42-43
10	VIDEO_OUT_2_G	CN42-44

CP-354

VIDEO

CN701

1	RM_TX_-	CN12-38
2	RM_RX_+	CN12-39
3	PRIORITY	CN12-41
4	RM_TX_+	CN12-37
5	RM_RX_-	CN12-40
6	LTC_OUT	CN22-42
7	LTC_SOURCE	CN22-40
8	H-FAST_EQ	CN303-1
9	H-FAN_STOP	CN12-45
10	H-NTSC	CN12-46
11	N.C.	
12	N.C.	

Motherboard

MB-757A (1/8)

BOARD NO. 1-667-496-12

LOT NO. 935-

DNW-A220_MB-757_001

SV-194A TO CN301

CN301

FFC		SIGNAL	I/O	LEVEL	DESTINATION
CN301- 1	30	REAL_GND	IN		(SE-150)
CN301- 2	29	SY-SY1_JP2			CN11-77 (SY-250)
CN301- 3	28	SY-SY1_JP1			CN11-76 (SY-250)
CN301- 4	27	SY-SY1_JP0			CN11-75 (SY-250)
CN301- 5	26	L-SV_EX_COM_EN	IN	+5V	CN11-73 (SY-250)
CN301- 6	25	S_EX_COM_TX	OUT	+5V	CN11-71 (SY-250)
CN301- 7	24	S_EX_COM_RX	IN	+5V	CN11-69 (SY-250)
CN301- 8	23	S"S_A10	IN	+3.3V	CN21-57 (SY-260)
CN301- 9	22	S"S_A9	IN	+3.3V	CN21-56 (SY-260)
CN301-10	21	S"S_A8	IN	+3.3V	CN21-55 (SY-260)
CN301-11	20	S"S_A7	IN	+3.3V	CN21-54 (SY-260)
CN301-12	19	S"S_A6	IN	+3.3V	CN21-53 (SY-260)
CN301-13	18	S"S_A5	IN	+3.3V	CN21-52 (SY-260)
CN301-14	17	S"S_A4	IN	+3.3V	CN21-51 (SY-260)
CN301-15	16	S"S_A3	IN	+3.3V	CN21-50 (SY-260)
CN301-16	15	S"S_A2	IN	+3.3V	CN21-49 (SY-260)
CN301-17	14	S"S_A1	IN	+3.3V	CN21-48 (SY-260)
CN301-18	13	S"S_A0	IN	+3.3V	CN21-47 (SY-260)
CN301-19	12	S"S_D7	I/O	+3.3V	CN21-46 (SY25Q 260, DRV, VPP, TG, SDI, DEC, APP, AUD
CN301-20	11	S"S_D6	I/O	+3.3V	CN21-45 (SY25Q 260, DRV, VPP, TG, SDI, DEC, APP, AUD
CN301-21	10	S"S_D5	I/O	+3.3V	CN21-44 (SY25Q 260, DRV, VPP, TG, SDI, DEC, APP, AUD
CN301-22	9	S"S_D4	I/O	+3.3V	CN21-43 (SY25Q 260, DRV, VPP, TG, SDI, DEC, APP, AUD
CN301-23	8	S"S_D3	I/O	+3.3V	CN21-42 (SY25Q 260, DRV, VPP, TG, SDI, DEC, APP, AUD
CN301-24	7	S"S_D2	I/O	+3.3V	CN21-41 (SY25Q 260, DRV, VPP, TG, SDI, DEC, APP, AUD
CN301-25	6	S"S_D1	I/O	+3.3V	CN21-40 (SY25Q 260, DRV, VPP, TG, SDI, DEC, APP, AUD
CN301-26	5	S"S_D0	I/O	+3.3V	CN21-39 (SY25Q 260, DRV, VPP, TG, SDI, DEC, APP, AUD
CN301-27	4	S"S_DIR	IN	+3.3V	CN21-36 (SY25Q 260, DRV, VPP, TG, SDI, DEC, APP, AUD
CN301-28	3	S"S_RD	IN	+3.3V	CN21-35 (SY25Q 260, DRV, VPP, TG, SDI, DEC, APP, AUD
CN301-29	2	S"S_WR	IN	+3.3V	CN21-34 (SY25Q 260, DRV, VPP, TG, SDI, DEC, APP, AUD
CN301-30	1	S"S_RESET	IN	+5V	CN21-33 (SY25Q 260, DRV, VPP, TG, SDI, DEC, APP, AUD

SV-194A TO CN302

CN302

FFC		SIGNAL	I/O	LEVEL	DESTINATIONS
CN302- 1	30	REAL_GND	IN		(SE-150)
CN302- 2	29	MT_CTL	IN	+3.3V	CN1-55 (DPR-87)
CN302- 3	28	OUTER_BUSY	IN	+3.3V	CN1-57 (DPR-87)
CN302- 4	27	MT_PULSE	OUT	+5V	CN1-59 (DPR-87)
CN302- 5	26	READ_START	OUT	+5V	CN1-61 (DPR-87)
CN302- 5	25	CAP_FWD/REW	OUT	+5V	CN1-63 (DPR-87)
CN302- 7	24	SV_BANK_0	OUT	+5V	CN1-65 (DPR-87)
CN302- 8	23	SV_BANK_1	OUT	+5V	CN1-67 (DPR-87)
CN302- 9	22	SV_BANK_2	OUT	+5V	CN1-69 (DPR-87)
CN302-10	21	SV_BANK_3	OUT	+5V	CN1-71 (DPR-87)
CN302-11	20	TRACK_START	OUT	+5V	CN1-73 (DPR-87)
CN302-12	19	SECTOR_START	OUT	+5V	CN1-75 (DPR-87)
CN302-13	18	SY-DFRL_JP0			CN1-77 (DPR-87)
CN302-14	17	SY-DFRL_JP1			CN1-79 (DPR-87)
CN302-15	16	REAL_GND			(SE-150)
CN302-16	15	SS_WDP	IN	+3.3V	CN12-41 (SY-25Q 260, TG)
CN302-17	14	SS_FRAME	IN	+3.3V	CN12-40 (SY-25Q 260, TG)
CN302-18	13	SS_ID	IN	+3.3V	CN12-37 (TG-191)
CN302-19	12	SV_REF	IN	+3.3V	CN12-39 (SY-25Q 260, TG)
CN302-20	11	REAL_GND			(SE-150)
CN302-21	10	L-SV_VCC_OFF	IN	+5V	CN21-80 (SY-260)
CN302-22	9	TAPE_DIRECTION	OUT	+5V	CN21-79 (SY-260)
CN302-23	8	REC_GUARD	IN	+5V	CN21-78 (SY-260)
CN302-24	7	EDIT_CTL	OUT	+5V	CN21-77 (SY-260)
CN302-25	6	L-SYSYS_WAIT	OUT	+5V	CN21-76 (SY-260)
CN302-26	5	PBL_LTC	OUT	+5V	CN21-75 (SY-260)
CN302-27	4	L-SY25V_CS	OUT	+5V	CN21-74 (SY-260)
CN302-28	3	REC_LTC	IN	+5V	CN21-73 (SY-260)
CN302-29	2	SY-SY2_JP0			CN21-71 (SY-260)
CN302-30	1	SY-SY2_JP1			CN21-72 (SY-260)

SV-194A TO CN303

CN303

FFC		SIGNAL	I/O	LEVEL	DESTINATIONS
CN303- 1	30	REAL_GND	IN		(SE-150)
CN303- 2	29	REAL_GND	IN		(SE-150)
CN303- 3	28				
CN303- 4	27				
CN303- 5	26				
CN303- 6	25				
CN303- 7	24	REAL_GND	IN		(SE-150)
CN303- 8	23	REAL_GND	IN		(SE-150)
CN303- 9	22	PBL_FP1	IN	+5V	CN101-31 (DM-114)
CN303-10	21	PBL_FP2	IN	+5V	CN101-29 (DM-114)
CN303-11	20	Y_PBL_SYNC	IN	+5V	CN101-28 (DM-114)
CN303-12	19	SERVO_V	OUT	+5V	CN101-26 (DM-114)
CN303-13	18	SY-TBC_JP0			CN101-27 (DM-114)
CN303-14	17	SY-TBC_JP1			CN101-25 (DM-114)
CN303-15	16	A2V_Y_SW_PLS	OUT	+5V	CN101-23 (DM-114)
CN303-16	15	A2V_C_SW_PLS	OUT	+5V	CN101-21 (DM-114)
CN303-17	14	L-C_PCM_MUTE	OUT	+5V	CN101-24 (DM-114)
CN303-18	13	L-Y_PCM_MUTE	OUT	+5V	CN101-22 (DM-114)
CN303-19	12	L-RF_Y_BLK	OUT	+5V	CN101-20 (DM-114)
CN303-20	11	L-RF_C_BLK	OUT	+5V	CN101-18 (DM-114)
CN303-21	10	SY_TAPE_SPEED	OUT	+5V	CN101-17 (DM-114)
CN303-22	9	SY-DM_JP0			CN101-15 (DM-114)
CN303-23	8	SY-DM_JP1			CN101-13 (DM-114)
CN303-24	7	L-SLOW_BID	OUT	+5V	CN101-16 (DM-114)
CN303-25	6				
CN303-26	5				
CN303-27	4	L-Y_DO_PLS	IN	+5V	CN101-12 (DM-114)
CN303-28	3	L-C_DO_PLS	IN	+5V	CN101-10 (DM-114)
CN303-29	2	REAL_GND	IN		(SE-150)
CN303-30	1	H-FAST_ED	OUT	+5V	CN101-6 (CP-317)

Motherboard
MB-757A (2/8)
BOARD NO. 1-667-496-12
LOT NO. 905-
DNW-A220_MB-757_0C1

SY-259B

CN11

DESTINATIONS	LEVEL	I/O		SIGNAL		SIGNAL	I/O	LEVEL	DESTINATIONS
		IN	1	REG_GND	2	REG_GND	IN		
		IN	3	REG_GND	4	REG_GND	IN		
		IN	5	REG_GND	6	REG_GND	IN		
		IN	7	REG_GND	8	REG_GND	IN		
		IN	9	REG_+2.5V	10	REG_+2.5V	IN		
		IN	11	REG_+2.5V	12	REG_+2.5V	IN		
		IN	13	REG_+3.3V-2	14	REG_+3.3V-2	IN		
		IN	15	REG_+3.3V-2	16	REG_+3.3V-2	IN		
		IN	17	REG_+5V-1	18	REG_+5V-1	IN		
		IN	19	REG_+5V-1	20	REG_+5V-1	IN		
		IN	21	REG_-5V	22	REG_-5V	IN		
		IN	23	REG_-5V	24	REG_-5V	IN		
		IN	25	REG_+6V	26	REG_+6V	IN		
		IN	27	REG_+6V	28	REG_+6V	IN		
		IN	29	REG_-6V	30	REG_-6V	IN		
		IN	31	REG_-6V	32	REG_-6V	IN		
			33		34	SY2_MR	IN	+3.3V	CN21-34
CN21-35	+3.3V	IN	35	SY2_RD	36	SY2_DIR	IN	+3.3V	CN21-36
			37		38				
CN21-39	+3.3V	I/O	39	SY2_D0	40	SY2_D1	I/O	+3.3V	CN21-40
CN21-41	+3.3V	I/O	41	SY2_D2	42	SY2_D3	I/O	+3.3V	CN21-42
CN21-43	+3.3V	I/O	43	SY2_D4	44	SY2_D5	I/O	+3.3V	CN21-44
CN21-45	+3.3V	I/O	45	SY2_D6	46	SY2_D7	I/O	+3.3V	CN21-46
CN21-47	+3.3V	IN	47	SY2_A0	48	SY2_A1	IN	+3.3V	CN21-48
CN21-49	+3.3V	IN	49	SY2_A2	50	SY2_A3	IN	+3.3V	CN21-50
CN21-51	+3.3V	IN	51	SY2_A4	52	SY2_A5	IN	+3.3V	CN21-52
CN21-53	+3.3V	IN	53	SY2_A6	54	SY2_A7	IN	+3.3V	CN21-54
CN21-55	+3.3V	IN	55	SY2_A8	56	SY2_A9	IN	+3.3V	CN21-56
CN21-57	+3.3V	IN	57	SY2_A10	58				
			59		60				
			61		62	POWER_ON_RESET	IN	+5V	CN900-99
			63		64				
			65		66	REG_GND			
			67	REG_GND	68	REG_GND			
CN301-24	+5V	OUT	69	SY_EX_COM_RX	70	REG_GND			
CN301-25	+5V	IN	71	SY_EX_COM_TX	72				
CN301-26	+5V	OUT	73	L-SY_EX_COM_EN	74				
CN301-27			75	SY-SY1_JP0	76	SY-SY1_JP1			CN301-28
CN301-29			77	SY-SY1_JP2	78				
CN201-28	+5V	OUT	79	SIF1_CK	80				
CN201-27	+5V	IN	81	SIF1_RDY	82	REG_GND			
CN201-26	+5V	OUT	83	SIF1_XY2	84				
CN201-25	+5V	OUT	85	SIF1_CMD	86		OUT	+5V	
CN201-24	+5V	IN	87	SIF1_RES	88				
CN201-13	+5V	OUT	89	CHAR_SIG_D_X	90	REG_GND			
			91		92				
CN201-14	+5V	OUT	93	CHAR_FRAME_D_X	94				
			95		96				
CN201-30	+5V	OUT	97	KEY_TX	98				
CN201-29	+5V	IN	99	KEY_RX	100				

CN12

DESTINATIONS	LEVEL	I/O		SIGNAL		SIGNAL	I/O	LEVEL	DESTINATIONS
			1		2	SY1_RESET	OUT	+5V	CN22-1
			3		4	SY1SY2_INT	OUT	+5V	CN22-3
			5		6	SY2SY1_INT	IN	+5V	CN22-5
			7		8	SY2_EX_COM_RX	OUT	+5V	CN22-7
			9		10	L-SY2_EX_COM_EN	OUT	+5V	CN22-9
			11		12	SY2_EX_COM_TX	IN	+5V	CN22-11
			13		14	525/625	OUT	+5V	CN22-13
			15		16	L-SY1SY2_WAIT	OUT	+5V	CN22-15
			17		18				
			19		20	L-SY2SY1_CS	IN	+5V	CN22-19
			21	REG_GND	22				
			23		24				
CN704-4			25	CTS	26	RTS			CN704-5
CN42-39	+5V	OUT	27	CHAR_SIG_A_X	28	CHAR_SIG_A_G	OUT	GND	CN42-10
CN42-41	+5V	OUT	29	CHAR_FRAME_A_X	30	CHAR_FRAME_A_G	OUT	GND	CN42-12
CN52-29	+3.3V	IN	31	CHAR_CK_X	32	CHAR_CK_G	IN	GND	CN52-14
CN52-33	+3.3V	IN	33	CHAR_HD	34	CHAR_VD	IN	+3.3V	CN52-35
CN52-41	+3.3V	IN	35	SS_GOP	36	SS_FRAME	IN	+3.3V	CN52-40
CN701-4	+5V	OUT	37	RM_TX_+	38	RM_TX_-	OUT	+5V	CN701-1
CN701-2	+5V	IN	39	RM_RX_+	40	RM_RX_-	IN	+5V	CN701-5
CN701-3	+5V	IN	41	PRIORITY	42	REG_GND			
CN704-2	+5V	OUT	43	COM_TX	44	COM_RX	IN	+5V	CN704-1
CN701-9	+5V	IN	45	H-FAIL_STOP	46	H-NTSC	IN	+5V	CN701-10
		IN	47	REG_GND	48	REG_GND	IN		
		IN	49	REG_GND	50	REG_GND	IN		

SY-260

CN21

DESTINATIONS	LEVEL	I/O		SIGNAL		SIGNAL	I/O	LEVEL	DESTINATIONS
		IN	1	REG_GND	2	REG_GND	IN		
		IN	3	REG_GND	4	REG_GND	IN		
		IN	5	REG_GND	6	REG_GND	IN		
		IN	7	REG_GND	8	REG_GND	IN		
		IN	9	REG_+2.5V	10	REG_+2.5V	IN		
		IN	11	REG_+2.5V	12	REG_+2.5V	IN		
		IN	13	REG_+3.3V-2	14	REG_+3.3V-2	IN		
		IN	15	REG_+3.3V-2	16	REG_+3.3V-2	IN		
		IN	17	REG_+5V-1	18	REG_+5V-1	IN		
		IN	19	REG_+5V-1	20	REG_+5V-1	IN		
		IN	21	REG_-5V	22	REG_-5V	IN		
		IN	23	REG_-5V	24	REG_-5V	IN		
		IN	25	REG_+6V	26	REG_+6V	IN		
		IN	27	REG_+6V	28	REG_+6V	IN		
		IN	29	REG_-6V	30	REG_-6V	IN		
		IN	31	REG_-6V	32	REG_-6V	IN		
*1	+5V	OUT	33	SYS_RESET	34	SY2_MR	OUT	+3.3V	* PLUGIN-34, 301-2
* PLUGIN-35, 3C1-3	+3.3V	OUT	35	SY2_RD	36	SY2_DIR	OUT	+3.3V	* PLUGIN-36, 301-4
*2	+3.3V	OUT	37	SY2_STB	38	SYS_PIORES	OUT	+3.3V	*3
* PLUGIN-39, 3C1-5	+3.3V	I/O	39	SY2_D0	40	SY2_D1	I/O	+3.3V	* PLUGIN-40, 301-7
* PLUGIN-39, 3C1-7	+3.3V	I/O	41	SY2_D2	42	SY2_D3	I/O	+3.3V	* PLUGIN-40, 301-8
* PLUGIN-41, 3C1-9	+3.3V	I/O	43	SY2_D4	44	SY2_D5	I/O	+3.3V	* PLUGIN-42, 301-9
* PLUGIN-43, 3C1-11	+3.3V	I/O	45	SY2_D6	46	SY2_D7	I/O	+3.3V	* PLUGIN-44, 301-2
* PLUGIN-45, 3C1-13	+3.3V	OUT	47	SY2_A0	48	SY2_A1	OUT	+3.3V	* PLUGIN-48, 301-4
* PLUGIN-47, 3C1-15	+3.3V	OUT	49	SY2_A2	50	SY2_A3	OUT	+3.3V	* PLUGIN-48, 301-6
* PLUGIN-49, 3C1-17	+3.3V	OUT	51	SY2_A4	52	SY2_A5	OUT	+3.3V	* PLUGIN-50, 301-8
* PLUGIN-51, 3C1-19	+3.3V	OUT	53	SY2_A6	54	SY2_A7	OUT	+3.3V	* PLUGIN-52, 301-30
CN11-55, CN301-21	+3.3V	OUT	55	SY2_A8	56	SY2_A9	OUT	+3.3V	CN11-56, CN301-22
CN11-57, CN301-23	+3.3V	OUT	57	SY2_A10	58	SY2_APRL_CS	OUT	+3.3V	CN61-81
CN61-55	+3.3V	OUT	59	SY2_SDI_CS	60				
	+3.3V	OUT	61		62	SY2_DPRL_CS	OUT	+3.3V	CN31-56
CN71-83	+3.3V	OUT	63	SY2_DEC_CS	64	SY2_VPRL_CS	OUT	+3.3V	CN41-55
CN51-55	+3.3V	OUT	65	SY2_TG_CS	66	REG_GND			
			67	REG_GND	68	REG_GND			
CN52-39, CN302-12	+3.3V	IN	69	SV_REF	70	REG_GND			
CN302-2			71	SW-SY2_JP0	72	SW-SY2_JP1			CN302-1
CN302-3	+5V	OUT	73	REC_LTC	74	L-SY2SV_CS	OUT	+5V	CN302-4
CN302-5	+5V	IN	75	PB_LTC	76	L-SVSY2_WAIT	IN	+5V	CN302-6
CN302-7	+5V	IN	77	EDIT_CTL	78	REC_GUARD	OUT	+5V	CN302-8
CN302-9	+5V	IN	79	TAPE_DIRECTION	80	L-SV_VCC_OFF	OUT	+5V	CN302-10
CN51-79	+3.3V	IN	81	ENC_AU_ID_0	82	REG_GND			
CN41-85, CN51-63, CN81-83	+3.3V	OUT	83	SIF3_SCK	84	SIF3_CMD	OUT	+3.3V	CN41-86, CN51-85, CN81-85
CN41-87, CN51-65, CN81-85	+3.3V	IN	85	SIF3_RES	86	SIF3_START	OUT	+3.3V	CN41-88, CN51-86, CN81-86
	+3.3V	OUT	87		88	ENC_AU_ID_1	IN	+3.3V	CN51-81
CN51-82	+3.3V	IN	89	ENC_AU_ID_2	90	REG_GND			
CN82-9	+1V	IN	91	DSP_HX	92	DSP_HBCK	OUT	+5V	CN82-8
CN82-11	+1V	OUT	93	DSP_HXS	94	DSP_HR	OUT	+5V	CN82-10
CN401-29	+1V	OUT	95	SIF2_EQ_CS	96	DSP_HRS	OUT	+5V	CN82-12
CN101-80, CN401-25, CN61-97	+3V	OUT	97	SIF2_SCK	98	SIF2_CMD	OUT	+5V	CN101-79, CN401-24, CN61-93, EQ
CN101-78, CN401-27, CN61-99	+3V	IN	99	SIF2_RES	100	SIF2_RDY	IN	+5V	CN101-77, CN401-36, CN61-100

CN22

DISTINATIONS	LEVEL	I/O		SIGNAL		SIGNAL	I/O	LEVEL	DISTINATIONS
CN12-2	+5V	IN	1	SY1_RESET	2		OUT	+5V	
CN12-4	+5V	IN	3	SY1SY2_INT	4	SIF2_SDI_CS	OUT	+5V	CN62-1
CN12-6	+5V	OUT	5	SY2SY1_INT	6				
CN12-8	+5V	IN	7	SY2_EX_COM_RX	8	SIF2_DM_CS	OUT	+5V	CN101-76
CN12-10	+5V	IN	9	L-SY2_EX_COM_EN	10	SIF2_TBC_CS	OUT	+5V	CN101-75
CN12-12	+5V	OUT	11	SY2_EX_COM_TX	12	SY2-DPRL_JP0			CN31-81
CN12-14	+5V	IN	13	525/625	14	SY2-DPRL_JP1			CN31-83
CN12-16	+5V	IN	15	L-SY1SY2_WAIT	16	SY2-DPRL_JP2			CN31-85
			17		18				
CN12-20	+5V	OUT	19	L-SY2SY1_CS	20				
			21	REG_GND	22	SY2-DEC_JP			CN72-22
			23		24	SY2-APRL_JP1			CN62-26
			25		26	SY2-APRL_JP2			CN62-24
			27		28	TBC_RESET			CN101-74
			29		30	H-525			CN101-73
			31		32	SY2-TG_JP			CN52-31
			33		34				
CN52-41	+3.3V	IN	35	SS_GOP	36	SS_FRAME	IN	+3.3V	CN52-40
			37		38				
			39		40	LTC_SOURCE	IN	+5V	CN701-7
			41		42	LTC_OUT	OUT	+5V	CN701-6
			43		44				
			45		46				
		IN	47	REG_GND	48	REG_GND	IN		
		IN	49	REG_GND	50	REG_GND	IN		

NOTE:

* *PLUGIN-** ⇨ CN11-** CN61-**, CN71-**, CN81-**
* *1 ⇨ CN31-33, CN41-33, CN51-31, CN61-33, CN71-33, CN81-33, CN91-13 CN101-81, CN301-1, CN401-26
* *2 ⇨ CN31-37, CN41-37, CN51-37, CN61-37, CN71-37, CN81-37
* *3 ⇨ CN31-38, CN41-38, CN51-38, CN61-38, CN71-38, CN81-38

Motherboard
MB-757A (3/8)
BOARD NO. 1-667-496-12
LOT NO. 935-
DNW-A220_MB-757_001

DPR-87

CN31

DESTINATIONS	LEVEL	I/O		SIGNAL		SIGNAL	I/O	LEVEL	DESTINATIONS
		IN	1	REG_GND	2	REG_GND	IN		
		IN	3	REG_GND	4	REG_GND	IN		
		IN	5	REG_GND	6	REG_GND	IN		
		IN	7	REG_GND	8	REG_GND	IN		
		IN	9	REG_+2.5V	10	REG_+2.5V	IN		
		IN	11	REG_+2.5V	12	REG_+2.5V	IN		
		IN	13	REG_+3.3V-1	14	REG_+3.3V-1	IN		
		IN	15	REG_+3.3V-1	16	REG_+3.3V-1	IN		
		IN	17	REG_+5V-1	18	REG_+5V-1	IN		
		IN	19	REG_+5V-1	20	REG_+5V-1	IN		
		IN	21	REG_-5V	22	REG_-5V	IN		
		IN	23	REG_-5V	24	REG_-5V	IN		
		IN	25	REG_+6V	26	REG_+6V	IN		
		IN	27	REG_+6V	28	REG_+6V	IN		
		IN	29	REG_-6V	30	REG_-6V	IN		
		IN	31	REG_-6V	32	REG_-6V	IN		
CN21-33	+5V	IN	33	SYS_RESET	34	SY2_WR	IN	+3.3V	CN21-34
CN21-35	+3.3V	IN	35	SY2_RD	36	SY2_DIR	IN	+3.3V	CN21-36
CN21-37	+3.3V	IN	37	SY2_STB	38	SYS_PIORES	IN	+3.3V	CN21-38
CN21-39	+3.3V/+5V	I/O	39	SY2_D0	40	SY2_D1	I/O	+3.3V/+3V	CN21-40
CN21-41	+3.3V/+5V	I/O	41	SY2_D2	42	SY2_D3	I/O	+3.3V/+3V	CN21-42
CN21-43	+3.3V/+5V	I/O	43	SY2_D4	44	SY2_D5	I/O	+3.3V/+3V	CN21-44
CN21-45	+3.3V/+5V	I/O	45	SY2_D6	46	SY2_D7	I/O	+3.3V/+3V	CN21-46
CN21-47	+3.3V	IN	47	SY2_A0	48	SY2_A1	IN	+3.3V	CN21-48
CN21-49	+3.3V	IN	49	SY2_A2	50	SY2_A3	IN	+3.3V	CN21-50
CN21-51	+3.3V	IN	51	SY2_A4	52	SY2_A5	IN	+3.3V	CN21-52
CN21-53	+3.3V	IN	53	SY2_A6	54	SY2_A7	IN	+3.3V	CN21-54
CN302-29	+3.0V	OUT	55	NT_CTL	56	SY2_DPR_CS	IN	+3.3V	CN21-62
CN302-28	+3.0V	OUT	57	OUTER_BUSY	58	DPR-TG_JP			CN51-57
CN302-27	+5V	IN	59	NT_PULSE	60				
CN302-26	+5V	IN	61	READ_START	62				
CN302-25	+5V	IN	63	CAP_FWD/REW	64				
CN302-24	+5V	IN	65	SV_BANK_0	66				
CN302-23	+5V	IN	67	SV_BANK_1	68	DPR_FS_X	IN	+3.3V	CN51-67
CN302-22	+5V	IN	69	SV_BANK_2	70	DPR_FS_G	IN	+3.3V	CN51-69
CN302-21	+5V	IN	71	SV_BANK_3	72	DPR_256FS_X	IN	+3.3V	CN51-71
CN302-20	+5V	IN	73	TRACK_START	74	DPR_256FS_G	IN	+3.3V	CN51-73
CN302-19	+5V	IN	75	SECTOR_START	76	DPR_512FS_X	IN	+3.3V	CN51-75
CN302-18			77	SV-DPR_JP0	78	DPR_512FS_G	IN	+3.3V	CN51-77
CN302-17			79	SV-DPR_JP1	80	ENC_AU_ID_0	IN	+3.3V	CN51-79
CN22-12			81	SY2-DPR_JP0	82	ENC_AU_ID_1	IN	+3.3V	CN51-81
CN22-14			83	SY2-DPR_JP1	84	ENC_AU_ID_2	IN	+3.3V	CN51-83
CN22-16			85	SY2-DPR_JP2	86	ENC_AU_VD	IN	+3.3V	CN51-87
CN41-89	+3.0V	OUT	87	SX_DEC_0	88	SX_DEC_1	OUT	+3.0V	CN41-90
CN41-91	+3.0V	OUT	89	SX_DEC_2	90	SX_DEC_3	OUT	+3.0V	CN41-92
CN41-93	+3.0V	OUT	91	SX_DEC_4	92	SX_DEC_5	OUT	+3.0V	CN41-94
CN41-95	+3.0V	OUT	93	SX_DEC_6	94	SX_DEC_7	OUT	+3.0V	CN41-96
CN41-97	+3.0V	OUT	95	SX_DEC_HD	96	SX_DEC_VD	OUT	+3.0V	CN41-98
CN41-99	+3.0V	OUT	97	SX_DEC_CFI	98	SX_DEC_PARITY	OUT	+3.0V	CN41-100
CN51-98	+3.3V	IN	99	DPR_27M_G	00	DPR_27M_X	IN	+3.3V	CN51-97

VPR-34

CN41

DESTINATIONS	LEVEL	I/O		SIGNAL		SIGNAL	I/O	LEVEL	DESTINATIONS
		IN	1	REG_GND	2	REG_GND	IN		
		IN	3	REG_GND	4	REG_GND	IN		
		IN	5	REG_GND	6	REG_GND	IN		
		IN	7	REG_GND	8	REG_GND	IN		
		IN	9	REG_+2.5V	10	REG_+2.5V	IN		
		IN	11	REG_+2.5V	12	REG_+2.5V	IN		
		IN	13	REG_+3.3V-1	14	REG_+3.3V-1	IN		
		IN	15	REG_+3.3V-1	16	REG_+3.3V-1	IN		
		IN	17	REG_+5V-1	18	REG_+5V-1	IN		
		IN	19	REG_+5V-1	20	REG_+5V-1	IN		
		IN	21	REG_-5V	22	REG_-5V	IN		
		IN	23	REG_-5V	24	REG_-5V	IN		
		IN	25	REG_+6V	26	REG_+6V	IN		
		IN	27	REG_+6V	28	REG_+6V	IN		
		IN	29	REG_-6V	30	REG_-6V	IN		
		IN	31	REG_-6V	32	REG_-6V	IN		
CN21-33	+5V	IN	33	SYS_RESET	34	SY2_WR	IN	+3.3V	CN21-34
CN21-35	+3.3V	IN	35	SY2_RD	36	SY2_DIR	IN	+3.3V	CN21-36
CN21-37	+3.3V	IN	37	SY2_STB	38	SYS_PIORES	IN	+3.3V	CN21-38
CN21-39	+3.3V	I/O	39	SY2_D0	40	SY2_D1	I/O	+3.3V	CN21-40
CN21-41	+3.3V	I/O	41	SY2_D2	42	SY2_D3	I/O	+3.3V	CN21-42
CN21-43	+3.3V	I/O	43	SY2_D4	44	SY2_D5	I/O	+3.3V	CN21-44
CN21-45	+3.3V	I/O	45	SY2_D6	46	SY2_D7	I/O	+3.3V	CN21-46
CN21-47	+3.3V	IN	47	SY2_A0	48	SY2_A1	IN	+3.3V	CN21-48
CN21-49	+3.3V	IN	49	SY2_A2	50	SY2_A3	IN	+3.3V	CN21-50
CN21-51	+3.3V	IN	51	SY2_A4	52	SY2_A5	IN	+3.3V	CN21-52
CN21-53	+3.3V	IN	53	SY2_A6	54	SY2_A7	IN	+3.3V	CN21-54
CN21-64	+3.3V	IN	55	SY2_VPR_CS	55				
CN51-59	0~+5V	IN	57	VIDEO_OUT_1_LEVEL	58	VIDEO_OUT_2_LEVEL	IN	0~+5V	CN51-58
CN101-68	+3.3V	IN	59	BCAM_VIDEO_0	60	BCAM_VIDEO_1	IN	+3.3V	CN101-67
CN101-66	+3.3V	IN	61	BCAM_VIDEO_2	62	BCAM_VIDEO_3	IN	+3.3V	CN101-65
CN101-64	+3.3V	IN	63	BCAM_VIDEO_4	64	BCAM_VIDEO_5	IN	+3.3V	CN101-63
CN101-62	+3.3V	IN	65	BCAM_VIDEO_6	66	BCAM_VIDEO_7	IN	+3.3V	CN101-61
CN101-60	+3.3V	IN	67	BCAM_VIDEO_8	68	BCAM_VIDEO_9	IN	+3.3V	CN101-59
CN101-58	+3.3V	IN	69	BCAM_VIDEO_HD	70	BCAM_VIDEO_VD	IN	+3.3V	CN101-57
CN101-56	+3.3V	IN	71	BCAM_CF_INFO	72	BCAM_PARITY	IN	+3.3V	CN101-55
CN51-95	+3.3V	IN	73	VPR_27M_J	74	VPR_27M_G	IN	+3.3V	CN51-96
CN51-5	+3.3V	IN	75	JOG_HD	75	JOG_VD	IN	+3.3V	CN51-7
CN51-9	+3.3V	IN	77	JOG_CFI	73	VPR_HD	IN	+3.3V	CN51-11
CN51-13	+3.3V	IN	79	VPR_VD	80	VPR_CFI	IN	+3.3V	CN51-15
CN51-17	+3.3V	IN	81	ENCODER_HD	82	ENCODER_VD	IN	+3.3V	CN51-19
CN51-21	+3.3V	IN	83	ENCODER_CFI	84	SD1_EF_LAG	IN	+3.3V	CN51-69
CN21-83	+3.3V	IN	85	SIF3_SCK	85	SIF3_CMD	IN	+3.3V	CN21-84
CN21-85	+3.3V	OUT	87	SIF3_RES	88	SIF3_START	IN	+3.3V	CN21-86
CN31-87	+3.3V	IN	89	SX_DEC_0	90	SX_DEC_1	IN	+3.3V	CN31-88
CN31-89	+3.3V	IN	91	SX_DEC_2	92	SX_DEC_3	IN	+3.3V	CN31-90
CN31-91	+3.3V	IN	93	SX_DEC_4	94	SX_DEC_5	IN	+3.3V	CN31-92
CN31-93	+3.3V	IN	95	SX_DEC_6	96	SX_DEC_7	IN	+3.3V	CN31-94
CN31-95	+3.3V	IN	97	SX_DEC_HD	98	SX_DEC_VD	IN	+3.3V	CN31-96
CN31-97	+3.3V	IN	99	SX_DEC_CFI	100	SX_DEC_PARITY	IN	+3.3V	CN31-98

CN32

DESTINATIONS	LEVEL	I/O		SIGNAL		SIGNAL	I/O	LEVEL	DESTINATIONS
CN62-3	+3.3V	IN	1	SX_ENC_0	2	SX_ENC_1	IN	+3.3V	CN62-4
CN62-5	+3.3V	IN	3	SX_ENC_2	4	SX_ENC_3	IN	+3.3V	CN62-6
CN62-7	+3.3V	IN	5	SX_ENC_4	6	SX_ENC_5	IN	+3.3V	CN62-8
CN62-9	+3.3V	IN	7	SX_ENC_6	8	SX_ENC_7	IN	+3.3V	CN62-10
CN62-11	+3.3V	IN	9	SX_ENC_8	10	SX_ENC_9	IN	+3.3V	CN62-12
CN62-13	+3.3V	IN	11	SX_ENC_HD	12	SX_ENC_VD	IN	+3.3V	CN62-14
CN62-15	+3.3V	IN	13	SX_ENC_CFI	14	SX_ENC_PARITY	IN	+3.3V	CN62-16
CN401-11	+3.3V	IN	15	INNER_DATA_0	16	INNER_DATA_1	IN	+3.3V	CN401-12
CN401-13	+3.3V	IN	17	INNER_DATA_2	18	INNER_DATA_3	IN	+3.3V	CN401-14
CN401-15	+3.3V	IN	19	INNER_DATA_4	20	INNER_DATA_5	IN	+3.3V	CN401-16
CN401-17	+3.3V	IN	21	INNER_DATA_6	22	INNER_DATA_7	IN	+3.3V	CN401-18
CN401-20	+3.3V	IN	23	INNER_PARITY	24	INNER_SYNC	IN	+3.3V	CN401-19
CN401-21	+3.0V	OUT	25	EQ_27M_0	26	DPR_ADV_CF	IN	+3.3V	CN52-27
CN401-22	+3.0V	OUT	27	EQ_27M_1	28	DEV_FRAME	IN	+3.3V	CN52-25
CN401-33	+3.0V	OUT	29	REC_CK_0	30	ENC_FRAME	IN	+3.3V	CN52-26
CN401-34	+3.0V	OUT	31	REC_CK_1	32	ENC_AU_1/2	IN	+3.3V	CN82-31
CN401-35	+3.0V	OUT	33	REC_PARITY	34	ENC_AU_3/4	IN	+3.3V	CN82-33
CN401-37	+3.0V	OUT	35	REC_B_G	36	DEC_AU_1/2	OUT	+3.0V	CN82-35
CN401-38	+3.0V	OUT	37	REC_B_X	38	DEC_AU_3/4	OUT	+3.0V	CN82-37
CN401-39	+3.0V	OUT	39	L-REC_A_EN	40	DEAUID_0	OUT	+3.0V	CN82-42
CN401-40	+3.0V	OUT	41	L-REC_B_EN	42	DEAUID_1	OUT	+3.0V	CN82-41
CN401-41	+3.0V	OUT	43	REC_A_G	44	DEAUID_2	OUT	+3.0V	CN82-40
CN401-42	+3.0V	OUT	45	REC_A_X	46	AVITO	OUT	+3.0V	CN82-39
		IN	47	REG_GND	48	REG_GND	IN		
		IN	49	REG_GND	50	REG_GND	IN		

CN42

DESTINATIONS	LEVEL	I/O		SIGNAL		SIGNAL	I/O	LEVEL	DESTINATIONS
CN62-3	+3.3V	IN	1	SX_ENC_0	2	SX_ENC_1	IN	+3.3V	CN62-4
CN62-5	+3.3V	IN	3	SX_ENC_2	4	SX_ENC_3	IN	+3.3V	CN62-6
CN62-7	+3.3V	IN	5	SX_ENC_4	6	SX_ENC_5	IN	+3.3V	CN62-8
CN62-9	+3.3V	IN	7	SX_ENC_6	8	SX_ENC_7	IN	+3.3V	CN62-10
CN62-11	+3.3V	IN	9	SX_ENC_8	10	SX_ENC_9	IN	+3.3V	CN62-12
CN62-13	+3.3V	IN	11	SX_ENC_HD	12	SX_ENC_VD	IN	+3.3V	CN62-14
CN62-15	+3.3V	IN	13	SX_ENC_CFI	14	SX_ENC_PARITY	IN	+3.3V	CN62-16
CN62-17, CN201-10	+3.3V	OUT	15	D_OUT_HD	15	D_OUT_CFO	OUT	+3.3V	CN62-19, CN201-9
CN62-19	+3.3V	OUT	17	D_OUT_CFI	18	D_OUT_CF2	OUT	+3.3V	CN62-20
CN62-21, CN201-8	+3.3V	OUT	19	D_OUT_9	20	D_OUT_8	OUT	+3.3V	CN62-22, CN201-7
CN62-23, CN201-6	+3.3V	OUT	21	D_OUT_7	22	D_OUT_6	OUT	+3.3V	CN62-24, CN201-5
CN62-25, CN201-4	+3.3V	OUT	23	D_OUT_5	24	D_OUT_4	OUT	+3.3V	CN62-26, CN201-3
CN62-27, CN201-2	+3.3V	OUT	25	D_OUT_3	25	D_OUT_2	OUT	+3.3V	CN62-28, CN201-1
CN62-29	+3.3V	OUT	27	D_OUT_1	28	D_OUT_0	OUT	+3.3V	CN62-30
CN62-31	+3.3V	OUT	29	D_OUT_PARITY	30	D_OUT_DLY_FLS			CN62-32
CN101-51	+3.3V	OUT	31	TBC_4FSC_X	32	TBC_4FSC_G	OUT		CN101-52
CN101-47	ANALOG	OUT	33	VISC_X	34	VISC_G	OUT		CN101-49
CN101-50	+3.3V	OUT	35	H-H_SHIFT	35	BCAM_CF	OUT	+3.3V	CN101-48
CN101-46	+3.3V	OUT	37	H-V_SHIFT	38	VPR-TG_JP			CN52-29
CN12-27	+5V	IN	39	CHAR_SIG_A_X	40	CHAR_SIG_A_G	IN		CN12-28
CN12-29	+5V	IN	41	CHAR_FRAME_A_X	42	CHAR_FRAME_A_G	IN		CN12-30
CN700-9	ANALOG	OUT	43	VIDEO_OUT_2_X	44	VIDEO_OUT_2_G	OUT		CN700-10
CN700-7	ANALOG	OUT	45	VIDEO_OUT_1_X	45	VIDEO_OUT_1_G	OUT		CN700-8
		IN	47	REG_GND	48	REG_GND	IN		
		IN	49	REG_GND	50	REG_GND	IN		

Motherboard
MB-757A (4/8)
BOARD NO. 1-667-496-12
LOT NO. 905-
DNW-A220_MB-757_0C1

http://getMANUAL.com

TG-191

CN51

DESTINATIONS	LEVEL	I/O		SIGNAL		SIGNAL	I/O	LEVEL	DESTINATIONS
		IN	1	REG_GND	2	REG_GND	IN		
		IN	3	REG_GND	4	REG_GND	IN		
		IN	5	REG_GND	6	REG_GND	IN		
		IN	7	REG_GND	8	REG_GND	IN		
		IN	9	REG_+2.5V	10	REG_+2.5V	IN		
		IN	11	REG_+2.5V	12	REG_+2.5V	IN		
		IN	13	REG_+3.3V-2	14	REG_+3.3V-2	IN		
		IN	15	REG_+3.3V-2	16	REG_+3.3V-2	IN		
		IN	17	REG_+5V-1	18	REG_+5V-1	IN		
		IN	19	REG_+5V-1	20	REG_+5V-1	IN		
		IN	21	REG_-5V	22	REG_-5V	IN		
		IN	23	REG_-5V	24	REG_-5V	IN		
		IN	25	REG_+8V	26	REG_+8V	IN		
		IN	27	REG_+8V	28	REG_+8V	IN		
		IN	29	REG_-8V	30	REG_-8V	IN		
		IN	31	REG_-8V	32	REG_-8V	IN		
CN21-33	+5V	IN	33	SY3_RESET	34	SY2_WR	IN	+3.3V	CN21-34
CN21-35	+3.3V	IN	35	SY2_RD	36	SY2_DIR	IN	+3.3V	CN21-36
CN21-37	+3.3V	IN	37	SY2_STB	38	SY3_PIORES	IN	+3.3V	CN21-38
CN21-39	+3.3V	I/O	39	SY2_D0	40	SY2_D1	I/O	+3.3V	CN21-40
CN21-41	+3.3V	I/O	41	SY2_D2	42	SY2_D3	I/O	+3.3V	CN21-42
CN21-43	+3.3V	I/O	43	SY2_D4	44	SY2_D5	I/O	+3.3V	CN21-44
CN21-45	+3.3V	I/O	45	SY2_D6	46	SY2_D7	I/O	+3.3V	CN21-46
CN21-47	+3.3V	IN	47	SY2_A0	48	SY2_A1	IN	+3.3V	CN21-48
CN21-49	+3.3V	IN	49	SY2_A2	50	SY2_A3	IN	+3.3V	CN21-50
CN21-51	+3.3V	IN	51	SY2_A4	52	SY2_A5	IN	+3.3V	CN21-52
CN21-53	+3.3V	IN	53	SY2_A6	54	SY2_A7	IN	+3.3V	CN21-54
CN21-55	+3.3V	IN	55	SY2_TG_CS	56				
CN51-58			57	DPR-TG_UP	58	VIDEO_OUT_2_LEVEL	OUT	ANALOG	CN41-58
CN41-57	ANALOG	OUT	59	VIDEO_OUT_1_LEVEL	60	SDI_IN_REF_HD	IN	+3.3V	CN61-57
			61		62	SDI_IN_REF_VD	IN	+3.3V	CN61-59
			63		64	V_START	IN	+3.3V	CN61-61
			65		66	INPUT_CFO	IN	+3.3V	CN61-63
CN31-68	+3.3V	OUT	67	DPR_FS_X	68	INPUT_CF1	IN	+3.3V	CN61-65
CN31-70		OUT	69	DPR_FS_G	70	INPUT_CF2	IN	+3.3V	CN61-67
CN31-72	+3.3V	OUT	71	DPR_256FS_X	72	AU_FS_X	OUT	+3.3V	CN61-77
CN31-74		OUT	73	DPR_256FS_G	74	AU_FS_G	OUT		CN61-80
CN31-76	+3.3V	OUT	75	DPR_512FS_X	76	AU_64FS_X	OUT	+3.3V	CN61-79
CN31-78		OUT	77	DPR_512FS_G	78	AU_256FS_X	OUT	+3.3V	CN61-81
CN21-81, CN31-8C	+3.3V	OUT	79	ENC_AU_ID_0	80	AU_256FS_G	OUT		CN61-82
CN21-83, CN31-82	+3.3V	OUT	81	ENC_AU_ID_1	82	ENC_AU_ID_2	OUT	+3.3V	CN61-83, CN51-84
CN21-83	+3.3V	IN	83	SIF3_SCK	84	SIF3_CMD	IN	+3.3V	CN21-84
CN21-85	+3.3V	OUT	85	SIF3_RES	86	SIF3_START	IN	+3.3V	CN21-86
CN31-86	+3.3V	OUT	87	ENC_AU_VD	88	L-AU_PLL_UNLOCK	OUT	+3.3V	CN61-87
CN61-71	+3.3V	IN	89	CRUSH_3F	90	SDI_EFLAG	IN	+3.3V	CN61-69
CN201-11	+3.3V	OUT	91	CHAR_27M_X	92				
CN62-35		OUT	93	SDI_27M_G	94	SDI_27M_X	OUT	+3.3V	CN62-34
CN41-73	+3.3V	OUT	95	VPR_27M_X	96	VPR_27M_G	OUT		CN41-74
CN31-100	+3.3V	OUT	97	DPR_27M_X	98	DPR_27M_G	OUT		CN31-99
CN101-42		OUT	99	TBC_27M_G	100	TBC_27M_X	OUT	+3.3V	CN101-41

CN52

DESTINATIONS	LEVEL	I/O		SIGNAL		SIGNAL	I/O	LEVEL	DESTINATIONS
CN101-37	+3.3V	OUT	1	TBC_HD	2	SDI_FS_X	OUT	+3.3V	CN62-36
CN101-35	+3.3V	OUT	3	TBC_VD	4	SDI_FS_G	OUT		CN62-37
CN41-75	+3.3V	OUT	5	JOG_HD	6	SDI_64FS_X	OUT	+3.3V	CN62-38
CN41-76	+3.3V	OUT	7	JOG_VD	8	SDI_128FS_X	OUT	+3.3V	CN62-39
CN41-77	+3.3V	OUT	9	JOG_CF1	10	SDI_128FS_G	OUT		CN62-40
CN41-78	+3.3V	OUT	11	VPR_HD	12	REC_VC	OUT	+3.3V	CN62-75
CN41-79	+3.3V	OUT	13	VPR_VD	14	APR_FS_X	OUT	+3.3V	CN62-13
CN41-80	+3.3V	OUT	15	VPR_CF1	16	APR_FS_G	OUT		CN62-15
CN41-81	+3.3V	OUT	17	ENCODES_HD	18	APR_64FS_X	OUT	+3.3V	CN62-17
CN41-82	+3.3V	OUT	19	ENCODES_VD	20	APR_256FS_G	OUT		CN62-21
CN41-83	+3.3V	OUT	21	ENCODES_CF1	22	APR_256FS_X	OUT	+3.3V	CN62-23
CN12-31	+3.3V	OUT	23	CHAR_CK_X	24	CHAR_CK_G	OUT		CN12-32
CN32-28	+3.3V	OUT	25	DEC_FRAME	26	ENC_FRAME	OUT	+3.3V	CN32-30
CN32-26	+3.3V	OUT	27	DPR_ADV_CF	28	ADV_CF	OUT	+3.3V	CN62-33
CN42-38			29	VPR-TG_UP	30	DEC_VC			CN62-42
CN22-32			31	SY2-TG_UP	32	DEC_AL_GOP	OUT	+3.3V	CN62-30
CN12-33	+3.3V	OUT	33	CHAR_HD	34	DEC_AL_FRAME	OUT	+3.3V	CN62-32
CN12-34	+3.3V	OUT	35	CHAR_VD	36	DEC_AL_VD	OUT	+3.3V	CN62-34
CN302-13	+3.3V	OUT	37	SG_VD	38	EQ_GOP	OUT	+3.3V	CN41-23
CN21-69, CN302-12	+3.3V	OUT	39	SY_REF	40	SS_FLAME	OUT	+3.3V	
CN12-35, CN22-31, CN302-15	+3.3V	OUT	41	SS_GOP	42	NON_STD_LOCK	IN	+3.3V	CN62-41
CN72-40		IN	43	SEL_INPUT_G	44	SEL_INPUT_X	IN	ANALOG	CN72-39
CN700-5		IN	45	REF_VIDEO_G	46	REF_VIDEO_X	IN	ANALOG	CN7X0-4
		IN	47	REG_GND	48	REG_GND	IN		
		IN	49	REG_GND	50	REG_GND	IN		

SDI-23

CN61

DESTINATIONS	LEVEL	I/O		SIGNAL		SIGNAL	I/O	LEVEL	DESTINATIONS
RE-150		IN	1	REG_GND	2	REG_GND	IN		RE-150
RE-150		IN	3	REG_GND	4	REG_GND	IN		RE-150
RE-150		IN	5	REG_GND	5	REG_GND	IN		RE-150
RE-150		IN	7	REG_GND	8	REG_GND	IN		RE-150
RE-150		IN	9	REG_+2.5V	10	REG_+2.5V	IN		RE-150
RE-150		IN	11	REG_+2.5V	12	REG_+2.5V	IN		RE-150
RE-150		IN	13	REG_+3.3V-2	14	REG_+3.3V-2	IN		RE-150
RE-150		IN	15	REG_+3.3V-2	16	REG_+3.3V-2	IN		RE-150
RE-150		IN	17	REG_+5V-1	18	REG_+5V-1	IN		RE-150
RE-150		IN	19	REG_+5V-1	20	REG_+5V-1	IN		RE-150
RE-150		IN	21	REG_-5V	22	REG_-5V	IN		RE-150
RE-150		IN	23	REG_-5V	24	REG_-5V	IN		RE-150
RE-150		IN	25	REG_+8V	26	REG_+8V	IN		RE-150
RE-150		IN	27	REG_+8V	28	REG_+8V	IN		RE-150
RE-150		IN	29	REG_-8V	30	REG_-8V	IN		RE-150
RE-150		IN	31	REG_-8V	32	REG_-8V	IN		RE-150
CN21-33	+5V	IN	33	SY3_RESET	34	SY2_WR	IN	+3.3V	CN21-34
CN21-35	+3.3V	IN	35	SY2_RD	36	SY2_DIR	IN	+3.3V	CN21-36
CN21-37	+3.3V	IN	37	SY2_STB	38	SY3_PIORES	IN	+3.3V	CN21-38
CN21-39	+3.3V	I/O	39	SY2_D0	40	SY2_D1	I/O	+3.3V	CN21-40
CN21-41	+3.3V	I/O	41	SY2_D2	42	SY2_D3	I/O	+3.3V	CN21-42
CN21-43	+3.3V	I/O	43	SY2_D4	44	SY2_D5	I/O	+3.3V	CN21-44
CN21-45	+3.3V	I/O	45	SY2_D6	46	SY2_D7	I/O	+3.3V	CN21-46
CN21-47	+3.3V	IN	47	SY2_A0	48	SY2_A1	IN	+3.3V	CN21-48
CN21-49	+3.3V	IN	49	SY2_A2	50	SY2_A3	IN	+3.3V	CN21-50
CN21-51	+3.3V	IN	51	SY2_A4	52	SY2_A5	IN	+3.3V	CN21-52
CN21-53	+3.3V	IN	53	SY2_A6	54	SY2_A7	IN	+3.3V	CN21-54
CN21-59	+3.3V	IN	55	SY2_SDI_CS	56	DEC_PLL_LOCK	IN	ANALOG	CN71-56
CN51-60	+3.3V	OUT	57	SD _IN_REF_HD	58	SDI_AU_MUTE_1	OUT	+3.3V	CN61-89
CN51-62	+3.3V	OUT	59	SD _IN_REF_VD	60	SDI_AU_MUTE_2	OUT	+3.3V	CN61-90
CN51-64	+3.3V	OUT	61	V_START	62	SDI_AU_MUTE_3	OUT	+3.3V	CN61-91
CN51-66	+3.3V	OUT	63	INPUT_CFO	64	SDI_AU_MUTE_4	OUT	+3.3V	CN61-92
CN51-68	+3.3V	OUT	65	INPUT_CF1	66	SDI_3/4_Z_FLAG	OUT	+3.3V	CN61-94
CN51-70	+3.3V	OUT	67	INPUT_CF2	68	SDI_1/2_Z_FLAG	OUT	+3.3V	CN61-93
CN41-84, CN51-90	+3.3V	OUT	69	SD _EFLAG	70	SDI_3/4_C_BIT	OUT	+3.3V	CN61-96
CN51-89	+3.3V	OUT	71	CRUSH_CF	72	SDI_1/2_C_BIT	OUT	+3.3V	CN61-95
CN71-73			73	DEC-SDI_UP	74	SDI_AUDIO_FL_3/4	OUT	+3.3V	CN61-98
CN52-12	+3.3V	IN	75	REC_VD	76	SDI_AUDIO_FL_1/2	OUT	+3.3V	CN61-97
CN71-77	+3.3V	IN	77	V_N_PARITY	78	V_IN_CF1	IN	+3.3V	CN71-76
CN71-79	+3.3V	IN	79	V_N_VD	80	V_IN_HD	IN	+3.3V	CN71-80
CN71-81	+3.3V	IN	81	V_N_CK_X	82	V_IN_CK_G	IN	+3.3V	CN71-82
CN71-83	+3.3V	IN	83	V_N_0	84	V_IN_1	IN	+3.3V	CN71-84
CN71-85	+3.3V	IN	85	V_N_2	86	V_IN_3	IN	+3.3V	CN71-86
CN71-87	+3.3V	IN	87	V_N_4	88	V_IN_5	IN	+3.3V	CN71-88
CN71-89	+3.3V	IN	89	V_N_6	90	V_IN_7	IN	+3.3V	CN71-90
CN71-91	+3.3V	IN	91	V_N_8	92	V_IN_9	IN	+3.3V	CN71-92
CN71-93	+3.3V	OUT	93	DD_START	94	DD_SCK	OUT	+3.3V	CN71-94
CN71-95	+3.3V	OUT	95	MODE_DATA	96	STATUS_DATA	IN	+3.3V	CN71-96
CN21-97	+5V	IN	97	SIF2_SCK	98	SIF2_CMD	IN	+5V	CN21-98
CN21-99	+5V	OUT	99	SIF2_RES	100	SIF2_RDY	IN	+5V	CN21-100

CN62

DESTINATIONS	LEVEL	I/O		SIGNAL		SIGNAL	I/O	LEVEL	DESTINATIONS
CN22-4	+3.3V	IN	1	SIF2_SDI_CS	2	DEC_RESET	OUT	+3.3V	CN72-2
CN32-1, CN42-1	+3.3V	OUT	3	SX_ENC_0	4	SX_ENC_1	OUT	+3.3V	CN32-2, CN42-2
CN32-3, CN42-3	+3.3V	OUT	5	SX_ENC_2	5	SX_ENC_3	OUT	+3.3V	CN32-4, CN42-4
CN32-5, CN42-5	+3.3V	OUT	7	SX_ENC_4	8	SX_ENC_5	OUT	+3.3V	CN32-6, CN42-6
CN32-7, CN42-7	+3.3V	OUT	9	SX_ENC_6	10	SX_ENC_7	OUT	+3.3V	CN32-8, CN42-8
CN32-9, CN42-9	+3.3V	OUT	11	SX_ENC_8	12	SX_ENC_9	OUT	+3.3V	CN32-10, CN42-10
CN32-11, CN42-11	+3.3V	OUT	13	SX_ENC_HD	14	SX_ENC_VD	OUT	+3.3V	CN32-12, CN42-12
CN32-13, CN42-13	+3.3V	OUT	15	SX_ENC_CF1	16	SX_ENC_PARITY	OUT	+3.3V	CN32-14, CN42-14
CN42-15	+3.3V	IN	17	D_OUT_HD	18	D_OUT_CFO	IN	+3.3V	CN42-16
CN42-17	+3.3V	IN	19	D_OUT_CF1	20	D_OUT_CF2	IN	+3.3V	CN42-18
CN42-19	+3.3V	IN	21	D_OUT_9	22	D_OUT_8	IN	+3.3V	CN42-20
CN42-21	+3.3V	IN	23	D_OUT_7	24	D_OUT_6	IN	+3.3V	CN42-22
CN42-23	+3.3V	IN	25	D_OUT_5	26	D_OUT_4	IN	+3.3V	CN42-24
CN42-25	+3.3V	IN	27	D_OUT_3	28	D_OUT_2	IN	+3.3V	CN42-26
CN42-27	+3.3V	IN	29	D_OUT_1	30	D_OUT_0	IN	+3.3V	CN42-28
CN42-29	+3.3V	IN	31	D_OUT_PARITY	32	D_OUT_DLY_PLS			CN42-30
CN52-28	+3.3V	IN	33	ADV_CF	34	SDI_27M_X	IN	+3.3V	CN51-34
CN51-33	GND	IN	35	SD _27M_G	36	SDI_FS_X	IN	+3.3V	CN52-2
CN52-4	GND	IN	37	SD _FS_G	38	SDI_64FS_X	IN	+3.3V	CN52-6
CN52-8	+3.3V	IN	39	SD _128FS_X	40	SDI_128FS_G	IN	GND	CN52-10
CN52-42	+3.3V	OUT	41	NON_STD_LOCK	42	DEC_VD			CN52-30
CN62-43	+3.3V	IN	43	SD _AUDIO_T_1/2	44	SDI_AUDIO_T_3/4	IN	+3.3V	CN62-44
			45		46				
		IN	47	REG_GND	48	REG_GND	IN		
		IN	49	REG_GND	50	REG_GND	IN		

Motherboard
MB-757A (5/8)
BOARD NO. 1-667-496-12
LOT NO. 905-
DNW-A220_MB-757_001

DEC-97

CN71

DESTINATIONS	LEVEL	I/O		SIGNAL		SIGNAL	I/O	LEVEL	DESTINATIONS
		IN	1	REG_GND	2	REG_GND	IN		
		IN	3	REG_GND	4	REG_GND	IN		
		IN	5	REG_GND	6	REG_GND	IN		
		IN	7	REG_GND	8	REG_GND	IN		
		IN	9	REG_+2.5V	10	REG_+2.5V	IN		
		IN	11	REG_+2.5V	12	REG_+2.5V	IN		
		IN	13	REG_+3.3V-2	14	REG_+3.3V-2	IN		
		IN	15	REG_+3.3V-2	16	REG_+3.3V-2	IN		
		IN	17	REG_+5V-2	18	REG_+5V-2	IN		
		IN	19	REG_+5V-2	20	REG_+5V-2	IN		
		IN	21	REG_-5V	22	REG_-5V	IN		
		IN	23	REG_-5V	24	REG_-5V	IN		
		IN	25	REG_+6V	26	REG_+5V	IN		
		IN	27	REG_+6V	28	REG_+5V	IN		
		IN	29	REG_-6V	30	REG_-5V	IN		
		IN	31	REG_-6V	32	REG_-5V	IN		
CN21-33	+5V	IN	33	SYS_RESET	34	SY2_WR	IN	+3.3V	CN21-34
CN21-35	-3.3V	IN	35	SY2_RD	36	SY2_DIR	IN	+3.3V	CN21-35
CN21-37	-3.3V	IN	37	SY2_STB	38	SYS_PIOPES	IN	+3.3V	CN21-38
CN21-39	-3.3V	I/O	39	SY2_D0	40	SY2_D1	I/O	+3.3V	CN21-40
CN21-41	-3.3V	I/O	41	SY2_D2	42	SY2_D3	I/O	+3.3V	CN21-42
CN21-43	-3.3V	I/O	43	SY2_D4	44	SY2_D5	I/O	+3.3V	CN21-44
CN21-45	-3.3V	I/O	45	SY2_D6	46	SY2_D7	I/O	+3.3V	CN21-45
CN21-47	-3.3V	IN	47	SY2_A0	48	SY2_A1	IN	+3.3V	CN21-48
CN21-49	-3.3V	IN	49	SY2_A2	50	SY2_A3	IN	+3.3V	CN21-50
CN21-51	-3.3V	IN	51	SY2_A4	52	SY2_A5	IN	+3.3V	CN21-52
CN21-53	-3.3V	IN	53	SY2_A6	54	SY2_A7	IN	+3.3V	CN21-54
			55		56	DEC_P.L._LOCK	OUT		CN61-55
			57		58				
			59		60				
			61		62				
CN21-63	-3.3V	IN	63	SY2_DEC_CS	64				
			65		66				
			67		68				
			69		70				
			71		72				
CN61-73			73	DEC-SDI_JP	74				
			75		76				
CN61-77	-3.3V	OUT	77	V_IN_PARITY	78	V_IN_OFI	OUT	+3.3V	CN61-78
CN61-79	-3.3V	OUT	79	V_IN_VD	80	V_IN_HD	OUT	+3.3V	CN61-80
CN61-81	-3.3V	OUT	81	V_IN_CK_X	82	V_IN_CK_G	OUT	+3.3V	CN61-82
CN61-83	-3.3V	OUT	83	V_IN_0	84	V_IN_1	OUT	+3.3V	CN61-84
CN61-85	-3.3V	OUT	85	V_IN_2	86	V_IN_3	OUT	+3.3V	CN61-85
CN61-87	-3.3V	OUT	87	V_IN_4	88	V_IN_5	OUT	+3.3V	CN61-88
CN61-89	-3.3V	OUT	89	V_IN_6	90	V_IN_7	OUT	+3.3V	CN61-90
CN61-91	-3.3V	OUT	91	V_IN_8	92	V_IN_9	OUT	+3.3V	CN61-92
CN61-93	-3.3V	IN	93	DD_START	94	DD_SOC	IN	+3.3V	CN61-94
CN61-95	-3.3V	IN	95	MODE_DATA	96	STATUS_DATA	OUT	+3.3V	CN61-96
			97		98				
			99		100				

CN72

DESTINATIONS	LEVEL	I/O		SIGNAL		SIGNAL	I/O	LEVEL	DESTINATIONS
			1		2	DEC_RESET	IN	+3.3V	CN62-2
			3		4				
			5		6				
			7		8				
			9		10				
			11		12				
			13		14				
			15		16				
			17		18				
			19		20				
			21		22	SY2-DEC_JP			CN22-22
			23		24				
			25		26				
			27		28				
			29		30				
			31		32				
			33		34				
			35		36				
			37		38				
CN52-44		OUT	39	SEL_INPUT_X	40	SEL_INPUT_G	OUT		CN52-43
			41		42				
			43		44				
CN700-1		IN	45	INPUT_VIDEO_X	46	INPUT_VIDEO_G	IN		CN700-2
		IN	47	REG_GND	48	REG_GND	IN		
		IN	49	REG_GND	50	REG_GND	IN		

Motherboard
MB-757A (6/8)
BOARD NO. 1-667-496-12
LOT NO. 905-
DNW-A220_MB-757_0C1

APR-27A

CN81

DESTINATIONS	LEVEL	I/O		SIGNAL		SIGNAL	I/O	LEVEL	DESTINATIONS
		IN	1	AUDIO_GND	2	AUDIO_GND	IN		
		IN	3	REG_GND	4	REG_GND	IN		
		IN	5	REG_GND	6	REG_GND	IN		
		IN	7	REG_GND	8	REG_GND	IN		
		IN	9	REG_+2.5V	10	REG_+2.5V	IN		
		IN	11	REG_+2.5V	12	REG_+2.5V	IN		
		IN	13	REG_+3.3V-2	14	REG_+3.3V-2	IN		
		IN	15	REG_+3.3V-2	16	REG_+3.3V-2	IN		
		IN	17	REG_+5V-2	18	REG_+5V-2	IN		
		IN	19	REG_+5V-2	20	REG_+5V-2	IN		
		IN	21	REG_-5V	22	REG_-5V	IN		
		IN	23	REG_-5V	24	REG_-5V	IN		
		IN	25	REG_+8V	26	REG_+8V	IN		
		IN	27	REG_+8V	28	REG_+8V	IN		
		IN	29	REG_-8V	30	REG_-8V	IN		
		IN	31	REG_-8V	32	REG_-8V	IN		
CN21-33	+5V	IN	33	SYS_RESET	34	SY2_WR	IN	+3.3V	CN21-34
CN21-35	+3.3V	IN	35	SY2_RD	36	SY2_DIR	IN	+3.3V	CN21-36
CN21-37	+3.3V	IN	37	SY2_STB	38	SYS_PIORES	IN	+3.3V	CN21-38
CN21-39	+3.3V	I/O	39	SY2_D0	40	SY2_D1	I/O	+3.3V	CN21-40
CN21-41	+3.3V	I/O	41	SY2_D2	42	SY2_D3	I/O	+3.3V	CN21-42
CN21-43	+3.3V	I/O	43	SY2_D4	44	SY2_D5	I/O	+3.3V	CN21-44
CN21-45	+3.3V	I/O	45	SY2_D6	46	SY2_D7	I/O	+3.3V	CN21-46
CN21-47	+3.3V	IN	47	SY2_A0	48	SY2_A1	IN	+3.3V	CN21-48
CN21-49	+3.3V	IN	49	SY2_A2	50	SY2_A3	IN	+3.3V	CN21-50
CN21-51	+3.3V	IN	51	SY2_A4	52	SY2_A5	IN	+3.3V	CN21-52
CN21-53	+3.3V	IN	53	SY2_A6	54	SY2_A7	IN	+3.3V	CN21-54
CN81-54	+3.3V	OUT	55	H-DUB_L_CH_DE-EMP	56	H-DUB_R_CH_DE-EMP	OUT	+3.3V	CN81-53
CN81-56		IN	57	A/D_R_AUDIO_G	58	A/D_R_AUDIO_I	IN	+5V	CN81-55
CN81-58	+3.3V	OUT	59	D/A_LINE_L/R_G	60	D/A_LINE_L/R_X	OUT	+3.3V	CN81-57
CN81-60	+3.3V	OUT	61	D/A_MON_L/R_G	62	D/A_MON_L/R_I	OUT	+3.3V	CN81-59
CN81-61	+3.3V	OUT	63	MON_L-VAR/H-FIX	64	L-ANALOG/H-DIGITAL	OUT	+3.3V	CN81-62
CN81-63	+3.3V	OUT	65	L-CH1_EMP_ON	66	L-CH2_EMP_ON	OUT	+3.3V	CN81-64
CN81-65	+3.3V	OUT	67	L-CH1/3_DE-EMP_ON	68	L-CH2/4_DE-EMP_ON	OUT	+3.3V	CN81-66
CN81-67	+3.3V	OUT	69	L-L_CH_DE-EMP_ON	70	L-R_CH_DE-EMP_ON	OUT	+3.3V	CN81-68
CN81-69	+3.3V	OUT	71	CH1_L-UNI/H-VAR	72	CH2_L-UNI/H-VAR	OUT	+3.3V	CN81-70
CN81-71	+3.3V	OUT	73	CH1_L-LIM/H-AGC	74	CH2_L-LIM/H-AGC	OUT	+3.3V	CN81-72
CN81-73	+3.3V	OUT	75	L-CH1_MAN	76	L-CH2_MAN	OUT	+3.3V	CN81-74
CN81-75	+3.3V	OUT	77	L-L_LINE_D/A_MUTE	78	L-MON_D/A_MUTE	OUT	+3.3V	CN81-76
CN81-78			79	AU-APR_0	80	L-NFL_ON	OUT	+3.3V	CN81-94
CN81-56	+3.3V	IN	81	SY2_APR_CS	82	D/A_DUB_L/R	OUT	+3.3V	CN81-93
CN21-83	+3.3V	IN	83	SIF3_SCK	84	SIF3_GND	IN	+3.3V	CN21-84
CN21-85	+3.3V	OUT	85	SIF3_RES	86	SIF3_START	IN	+3.3V	CN21-86
CN51-88	+3.3V	IN	87	L-AU_PLL_UNLOCK	88	H-POWER_ON_MUTE	OUT	+5/+3.3V	CN81-90
CN61-58	+3.3V	IN	89	SD1_AU_MUTE_1	90	SD1_AU_MUTE_2	IN	+3.3V	CN61-60
CN61-62	+3.3V	IN	91	SD1_AU_MUTE_3	92	SD1_AU_MUTE_4	IN	+3.3V	CN61-64
CN61-68	+3.3V	IN	93	SD1_1/2_Z_FLAG	94	SD1_3/4_Z_FLAG	IN	+3.3V	CN61-66
CN61-72	+3.3V	IN	95	SD1_1/2_C_BIT	96	SD1_3/4_C_BIT	IN	+3.3V	CN61-70
CN61-76	+3.3V	IN	97	SD1_AUDIO_R_1/2	98	SD1_AUDIO_R_3/4	IN	+3.3V	CN61-74
CN81-95			99	AU-APR_1	100	AU-APR_2			CN81-96

CN82

DESTINATIONS	LEVEL	I/O		SIGNAL		SIGNAL	I/O	LEVEL	DESTINATIONS
CN601-6		IN	1	UNREG_+12L	2	UNREG_GND	IN		
		OUT	3	AU_GND	4	AU_-12V	OUT		CN601-8
CN601-5		OUT	5	AU_+12V	6	AU_GND	OUT		CN601-7
			7		8	DSP_HBCK	IN	+5V	CN21-92
CN21-91	+5V	OUT	9	DSP_HX	10	DSP_HR	IN	+5V	CN21-94
CN21-93	+5V	IN	11	DSP_HXS	12	DSP_HRS	IN	+5V	CN21-96
CN52-14	+3.3V		13	APR_FS_X	14	H-POWER_OFF_MUTTING			CN601-5
CN52-16			15	APR_FS_G	16				
CN52-18	+3.3V		17	APR_64FS_I	18				
			19		20				
CN52-20		IN	21	APR_256FS_G	22				
CN52-22	+3.3V	IN	23	APR_256FS_X	24	SY2-APR_JP2			CN22-26
			25		26	SY2-APR_JP1			CN22-24
			27		28				
			29		30	DEC_AU_GOP	IN	+3.3V	CN52-32
CN52-32	+3.3V	OUT	31	ENC_AU_1/2	32	DEC_AU_FRAME	IN	+3.3V	CN52-34
CN52-34	+3.3V	OUT	33	ENC_AU_3/4	34	DEC_AU_VD	IN	+3.3V	CN52-36
CN52-36	+3.3V	IN	35	DEC_AU_1/2	36				
CN52-38	+3.3V	IN	37	DEC_AU_3/4	38				
CN52-46	+3.3V	IN	39	AVST0	40	DEAUD_2	IN	+3.3V	CN32-44
CN52-42	+3.3V	IN	41	DEAUD_1	42	DEAUD_0	IN	+3.3V	CN32-40
CN52-43	+3.3V	OUT	43	SD1_AUDIO_T_1/2	44	SD1_AUDIO_T_3/4	OUT	+3.3V	CN52-44
			45		46				
		IN	47	REG_GND	48	REG_GND	IN		
		IN	49	REG_GND	50	REG_GND	IN		

AU-249

CN01

DESTINATIONS	LEVEL	I/O		SIGNAL		SIGNAL	I/O	LEVEL	DESTINATIONS
		IN	1	AUDIO_GND	2	AUDIO_GND	IN		
		IN	3	AUDIO_GND	4	AUDIO_GND	IN		
		IN	5	REG_GND	6	REG_GND	IN		
		IN	7	REG_GND	8	REG_GND	IN		
		IN	9	REG_-2.5V	10	REG_+2.5V	IN		
		IN	11	REG_-2.5V	12	REG_+2.5V	IN		
		IN	13	REG_-3.3V-2	14	REG_+3.3V-2	IN		
		IN	15	REG_-3.3V-2	16	REG_+3.3V-2	IN		
		IN	17	REG_-5V-2	18	REG_+5V-2	IN		
		IN	19	REG_-5V-2	20	REG_+5V-2	IN		
		IN	21	REG_-5V	22	REG_-5V	IN		
		IN	23	REG_-5V	24	REG_-5V	IN		
		IN	25	REG_-8V	26	REG_+8V	IN		
		IN	27	REG_-8V	28	REG_+8V	IN		
		IN	29	REG_-8V	30	REG_-8V	IN		
		IN	31	REG_-8V	32	REG_-8V	IN		
CN21-13	+5V	IN	33	SYS_RESET	34				
CN501-10		OUT	35	CH2/4_OUT_G	36	CH2/4_OUT_X	OUT	ANALOG	CN601-6
			37		38				
CN601-11		OUT	39	CH1/3_OUT_G	40	CH1/3_OUT_X	OUT	ANALOG	CN601-12
			41		42				
			43		44				
CN601-2		OUT	45	MON_L_CH_OUT_G	46	MON_L_CH_OUT_X	OUT	ANALOG	CN601-1
			47		48				
CN501-3		OUT	49	MON_R_CH_OUT_G	50	MON_R_CH_OUT_X	OUT	ANALOG	CN601-4
			51		52				
CN81-16	+3.3V	IN	53	H-DUB_R_CH_DE-EMP	54	H-DUB_L_CH_DE-EMP	IN	+3.3V	CN81-51
CN81-18	+5V	OUT	55	A/D_R_AUDIO_X	56	A/D_R_AUDIO_G	OUT		CN81-57
CN81-20	+3.3V	IN	57	D/A_LINE_L/R_X	58	D/A_LINE_L/R_G	IN		CN81-58
CN81-12	+3.3V	IN	59	D/A_MON_L/R_X	60	D/A_MON_L/R_G	IN		CN81-61
CN81-13	+3.3V	IN	61	MON_L-VAR/H-FIX	62	L-ANALOG/H-DIGITAL	IN	+3.3V	CN81-64
CN81-15	+3.3V	IN	63	L-CH_EMP_ON	64	L-CH2_EMP_ON	IN	+3.3V	CN81-66
CN81-17	+3.3V	IN	65	L-CH /3_DE-EMP_ON	66	L-CH2/4_DE-EMP_ON	IN	+3.3V	CN81-68
CN81-19	+3.3V	IN	67	L-L_CH_DE-EMP_ON	68	L-R_CH_DE-EMP_ON	IN	+3.3V	CN81-70
CN81-71	+3.3V	IN	69	CH1_L-UNI/H-VAR	70	CH2_L-UNI/H-VAR	IN	+3.3V	CN81-72
CN81-73	+3.3V	IN	71	CH1_L-LIM/H-AGC	72	CH2_L-LIM/H-AGC	IN	+3.3V	CN81-74
CN81-75	+3.3V	IN	73	L-CH_MAN	74	L-CH2_MAN	IN	+3.3V	CN81-76
CN81-77	+3.3V	IN	75	L-L_LINE_D/A_MUTE	76	L-MON_D/A_MUTE	IN	+3.3V	CN81-78
CN51-72	+3.3V	IN	77	AU_FS_X	78	AU-APR_0			CN81-79
CN51-76	+3.3V	IN	79	AU_64FS_X	80	AU_FS_G	IN		CN51-74
CN51-78	+3.3V	IN	81	AU_256FS_X	82	AU_256FS_G			CN51-80
CN81-12			83	D/A_DUB_L/R	84	L-NFL_ON	IN	+3.3V	CN81-93
CN8-2		OUT	85	HP_L_CH_G	86	HP_L_CH_X	OUT	ANALOG	CN8-1
CN8-11		OUT	87	HP_L_CH_VR_G	88	HP_L_CH_VR_X	OUT	ANALOG	CN8-12
			89		90	H-POWER_ON_MUTE	IN	+5V/+3.3V	CN81-86
CN8-3		IN	91	HP_R_CH_G	92	HP_R_CH_X	IN	ANALOG	CN8-4
CN8-10		IN	93	HP_R_CH_VR_G	94	HP_R_CH_VR_X	IN	ANALOG	CN8-9
CN81-99			95	AU-APR_1	96	AU-APR_2			CN81-100
CN204-4	ANALOG	IN	97	BCAM_CH-2_X-AU	98	BCAM_CH-2_G-AU	IN		CN204-5
CN204-7	ANALOG	IN	99	BCAM_CH-1_X-AU	100	BCAM_CH-1_G-AU	IN		CN204-8

Motherboard
MB-757A (7/8)
BOARD NO. 1-667-496-12
LOT NO. 935-
DNW-A220_MB-757_001

DM-114

CN10

DESTINATIONS	LEVEL	I/O		SIGNAL		SIGNAL	I/O	LEVEL	DESTINATIONS
		IN	139	REG_GND	140	REG_GND	IN		
		IN	137	REG_GND	138	REG_GND	IN		
		IN	135	REG_GND	136	REG_GND	IN		
		IN	133	REG_GND	134	REG_GND	IN		
		IN	131	REG_GND	132	REG_GND	IN		
		IN	129	REG_GND	130	REG_GND	IN		
		IN	127	REG_GND	128	REG_GND	IN		
		IN	125	REG_GND	126	REG_GND	IN		
		IN	123	REG_+3.3V-2	124	REG_+3.3V-1	IN		
		IN	121	REG_+3.3V-2	122	REG_+3.3V-1	IN		
		IN	119	REG_+3.3V-2	120	REG_+3.3V-1	IN		
		IN	117	REG_+5V-2	118	REG_+5V-2	IN		
		IN	115	REG_+5V-2	116	REG_+5V-2	IN		
		IN	113	REG_+5V-2	114	REG_+5V-2	IN		
		IN	111	REG_-5V	112	REG_-5V	IN		
		IN	109	REG_-5V	110	REG_-5V	IN		
		IN	107	REG_-5V	108	REG_-5V	IN		
		IN	105	REG_+6V	106	REG_+6V	IN		
		IN	103	REG_+6V	104	REG_+6V	IN		
		IN	101	REG_+6V	102	REG_+6V	IN		
		IN	99	REG_-6V	100	REG_-6V	IN		
		IN	97	REG_-6V	98	REG_-6V	IN		
		IN	95	REG_-6V	96	REG_-6V	IN		
		IN	93	UNREG_+12V	94	UNREG_+12V	IN		
		IN	91	UNREG_+12V	92	UNREG_+12V	IN		
		IN	89	UNREG_+12V	90	UNREG_+12V	IN		
		IN	87	UNREG_GND	88	UNREG_GND	IN		
		IN	85	UNREG_GND	86	UNREG_GND	IN		
			83		84				
CN22-93	+5V	IN	81	SYS_RESET	82				
CN22-98	+5V	IN	79	SIF2_CMD	80	SIF2_SCK	IN	+5\	CN22-97
CN22-100	+5V	OUT	77	SIF2_RDY	78	SIF2_RES	OUT	+5\	CN22-99
CN22-10	+5V	IN	75	SIF2_TBC_CS	76	SIF2_DM_CS	IN	+5\	CN22-8
CN22-90			73	+-525	74	TBC_RESET			CN22-28
			71		72				
	+3.3V	OUT	69	TBC_GND	70	TBC_GND	OUT	+3.3V	
CN41-60	+3.3V	OUT	67	BCAM_VIDEO_1	68	BCAM_VIDEO_0	OUT	+3.3V	CN41-59
CN41-62	+3.3V	OUT	65	BCAM_VIDEO_3	66	BCAM_VIDEO_2	OUT	+3.3V	CN41-61
CN41-64	+3.3V	OUT	63	BCAM_VIDEO_5	64	BCAM_VIDEO_4	OUT	+3.3V	CN41-63
CN41-66	+3.3V	OUT	61	BCAM_VIDEO_7	62	BCAM_VIDEO_6	OUT	+3.3V	CN41-65
CN41-68	+3.3V	OUT	59	BCAM_VIDEO_9	60	BCAM_VIDEO_8	OUT	+3.3V	CN41-67
CN41-70	+3.3V	OUT	57	BCAM_VIDEO_VD	58	BCAM_VIDEO_HD	OUT	+3.3V	CN41-69
CN41-72	+3.3V	OUT	55	BCAM_PARITY	56	BCAM_CF_INFO	OUT	+3.3V	CN41-71
			53		54				
CN42-31	+3.3V	IN	51	TBC_4FSC_X	52	TBC_4FSC_G	IN	GNI	CN42-32
CN42-34	GND	IN	49	/TBC_G	50	H-H_SHIFT	IN	+3.3V	CN42-35
CN42-33	ANALOG	IN	47	/TBC_X	48	BCAM_CF	IN	+3.3V	CN42-36
			45		46	H-V_SHIFT	IN	+3.3V	CN42-37
			43	REG_GND	44				
CN52-100	+3.3V	IN	41	TBC_27M_X	42	TBC_27M_G	IN	GNI	CN52-99
			39		40				
CN52-1	+3.3V	IN	37	TBC_HD	38				
CN52-3	+3.3V	IN	35	TBC_VD	36				
			33		34				
CN303-22	+5V	OUT	31	PB_FP1	32				
CN303-21	+5V	OUT	29	PB_FP2	30				
CN303-18			27	3V-TBC_JP0	28	Y_FB_SYNC	OUT	+5\	CN303-20
CN303-17			25	3V-TBC_JP1	26	SERVO_V	IN	+5\	CN303-19
CN303-16	+5V	IN	23	\DV_Y_3M_PLS	24	L-C_PCM_MUTE	IN	+5\	CN303-14
CN303-15	+5V	IN	21	\DV_C_3M_PLS	22	L-Y_PCM_MUTE	IN	+5\	CN303-13
			19	REG_GND	20	L-RF_Y_BLK	IN	+5\	CN303-12
CN303-10	D0	IN	17	3V_TAPE_SPEED	18	L-RF_C_BLK	IN	+5\	CN303-11
CN303-9			15	3V-DM_JP0	16	L-SLOW_BID	IN	+5\	CN303-7
CN303-8			13	3V-DM_JP1	14				
			11		12	L-Y_DO_PLS	OUT	+5\	CN303-4
			9		10	L-C_DO_PLS	OUT	+5\	CN303-3
			7	REG_GND	8	REG_GND			
			5	REG_GND	6	REG_GND			
			3	REG_GND	4	REG_GND			
			1	REG_GND	2	REG_GND			

RE-150

CN900

DESTINATIONS	LEVEL	I/O		SIGNAL		SIGNAL	/O	LEVEL	DESTINATIONS
			1	REG_GND	2	REG_GND			
			3	REG_GND	4	REG_GND			
			5	REG_GND	6	REG_GND			
			7	REG_GND	8	REG_GND			
			9	REG_GND	10	REG_GND			
			11	AUDIO_GND	12	AUDIO_GND			
			13	AUDIO_GND	14	AUDIO_GND			
			15		16	PHANTOM_+48V	OUT		CN800-2
			17		18				
			19	REG_-6V	20	REG_-6V			
			21	REG_-6V	22	REG_-6V			
			23	REG_-5V	24	REG_-5V			
			25	REG_-5V	26	REG_-5V			
			27		28				
			29	REG_+5V-1	30	REG_+5V-1			
			31	REG_+5V-1	32	REG_+5V-1			
			33	REG_+5V-1	34	REG_+5V-1			
			35	REG_+5V-2	36	REG_+5V-1			
			37	REG_+5V-2	38	REG_+5V-1			
			39	REG_+5V-2	40	REG_+5V-1			
			41		42				
			43	EXT_DC_IN	44				
			45	REG_+4V	46	REG_+6V			
			47	REG_+4V	48	REG_+6V			
			49	REG_+4V	50	REG_+6V			
			51	REG_+1.3V-1	52	REG_+3.3/-1			
			53	REG_+1.3V-1	54	REG_+3.3/-1			
			55	REG_+1.3V-1	56	REG_+3.3/-1			
			57	REG_+1.3V-1	58	REG_+3.3/-1			
			59	REG_+1.3V-2	60	REG_+3.3/-2			
			61	REG_+1.3V-2	62	REG_+3.3/-2			
			63	REG_+1.3V-2	64	REG_+3.3/-2			
			65	REG_+1.3V-2	66	REG_+3.3/-2			
			67	REG_+2.5V	68	REG_+2.5/			
			69	REG_+2.5V	70	REG_+2.5/			
			71	REG_+2.5V	72	REG_+2.5/			
			73	REG_+2.5V	74	REG_+2.5/			
			75	UNREG_+12V	76	UNREG_+13V			
			77	UNREG_+12V	78	UNREG_+13V			
			79	UNREG_+12V	80	UNREG_+13V			
			81	UNREG_GND	82	UNREG_GND			
			83	UNREG_GND	84	UNREG_GND			
			85	UNREG_GND	86	UNREG_GND			
			87	REG_GND	88	REG_GND			
			89	REG_GND	90	REG_GND			
			91	REG_GND	92	REG_GND			
			93	REG_GND	94	REG_GND			
			95	REG_GND	96	REG_GND			
			97	REG_GND	98	REG_GND			
CN11-61	+5V	OUT	99	POWER_ON_RESET	100	POWER_SW	IN		CN1-1

	+2.5V	+3.3V-1	+3.3V-2	+5V-1	+5V-2	-5V	+6V	-6V	+12V UNREGI	A-GND
CN11 SY-259B CN21 SY-260	○		○	○		○	○	○		
CN31 DPR-87 CN41 VPR-34	○	○		○		○	○	○		
CN51 TG-191 CN61 SDI-23	○		○	○		○	○	○		
CN71 DEC-97	○		○		○	○	○	○		
CN81 APR-27A	○		○		○	○	○	○	○	○
CN91 AU-249	○		○		○	○	○	○		○
CN1C1 DM-114			○		○	○	○	○	○	
CN4C1 EQ-72			○	○		○	○	○		
CN9C1 SV-194A			○	○		○	○	○	○	○
CN7C2 CP-354				○		○				
CN2C4 PA-218							○	○		
CN6C0 CP-344							○	○		
CN8 HP-100							○	○		

Motherboard
MB-757A (8/8)
BOARD NO. 1-667-496-12
LOT NO. 905-
DNW-A220_MB-757_0C1

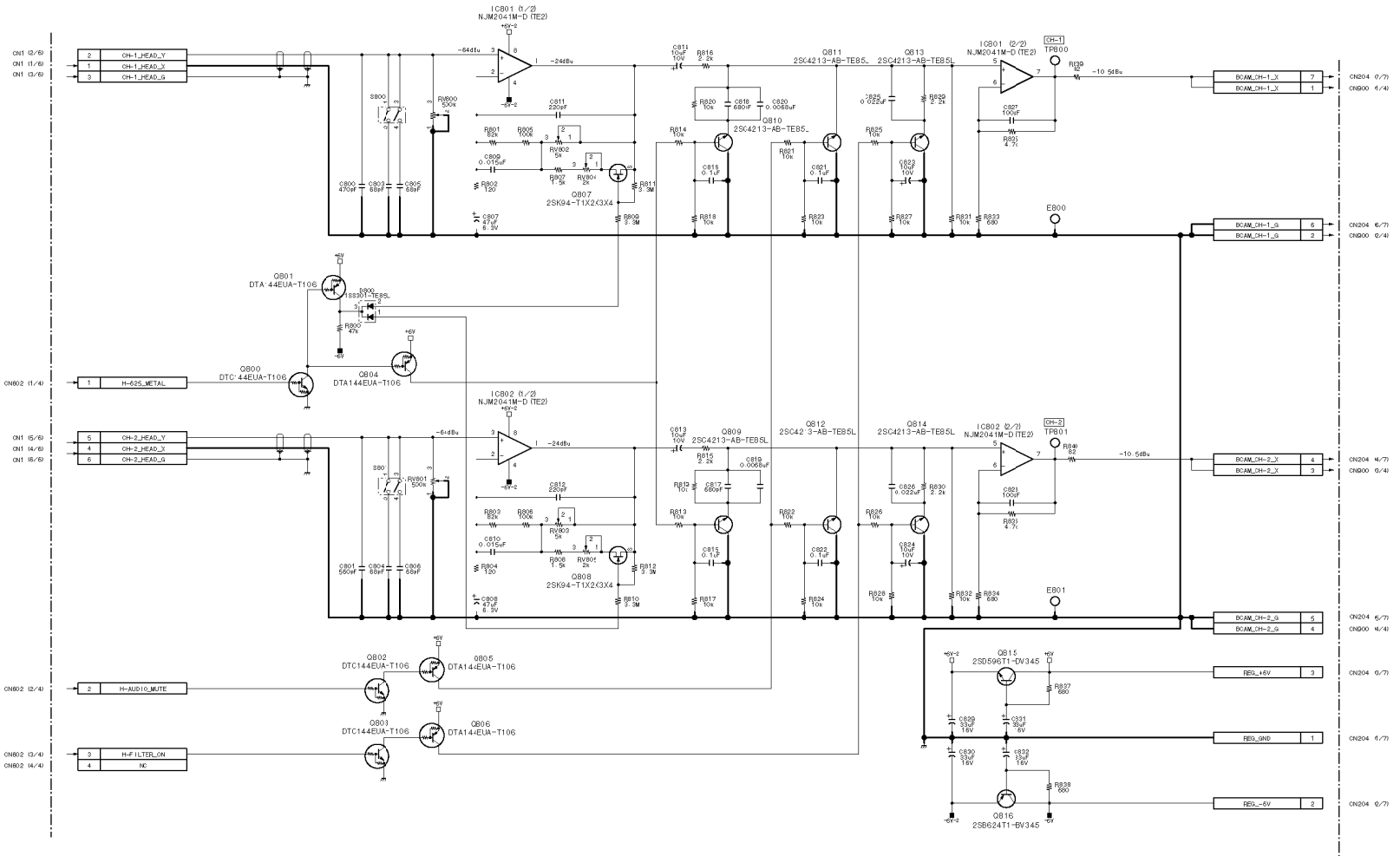

Head amplifier for analog Betacam PB

PA-218

BOARD NO. 1-667-852-11
LOT NO. 905-

DNW-A22(I)_PA-218_001

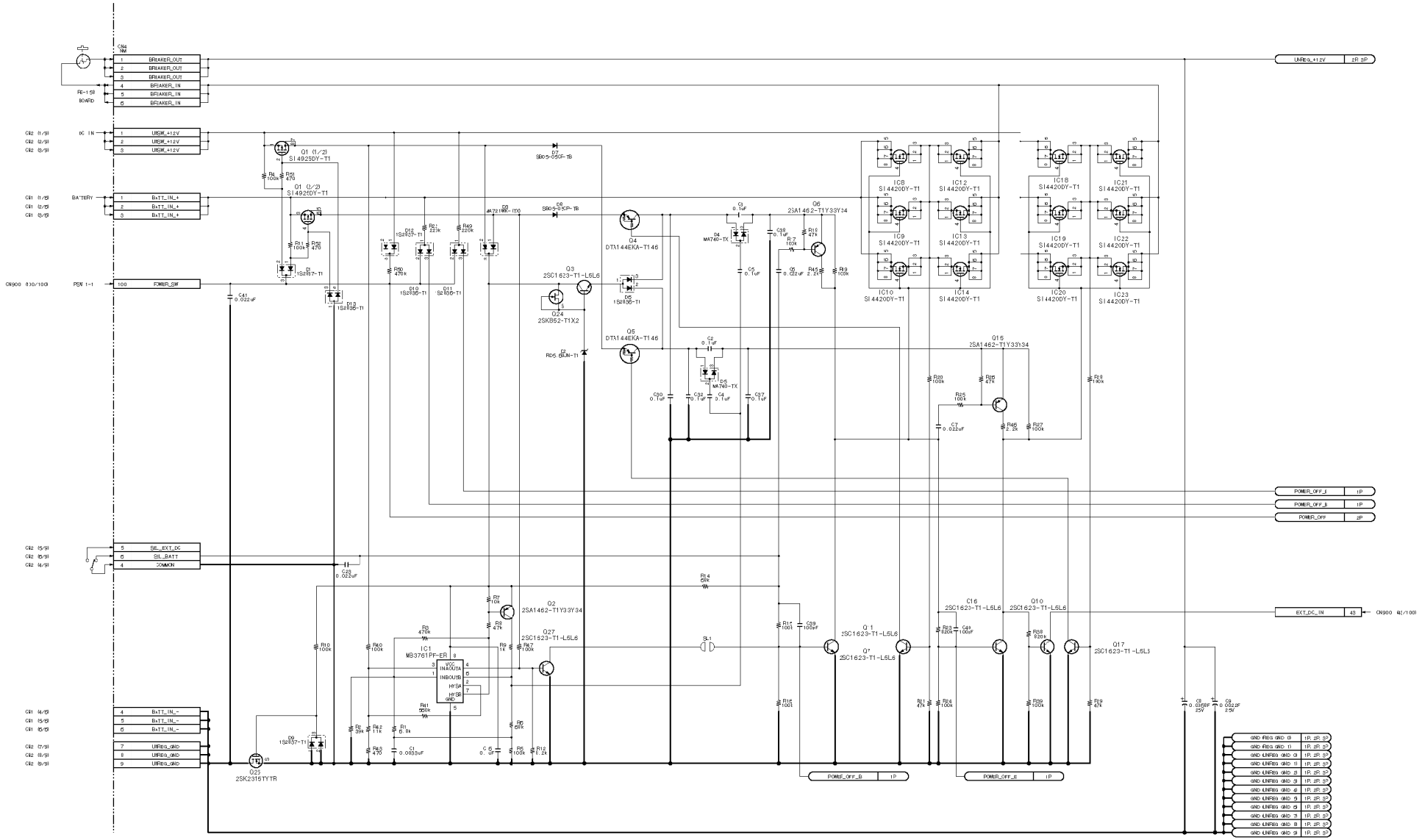

Switching regulator

RE-150 (1/3)

BOARD NO. 1-667-484-14

LOT NO. 905-

DNW-A22II_RE-150_001

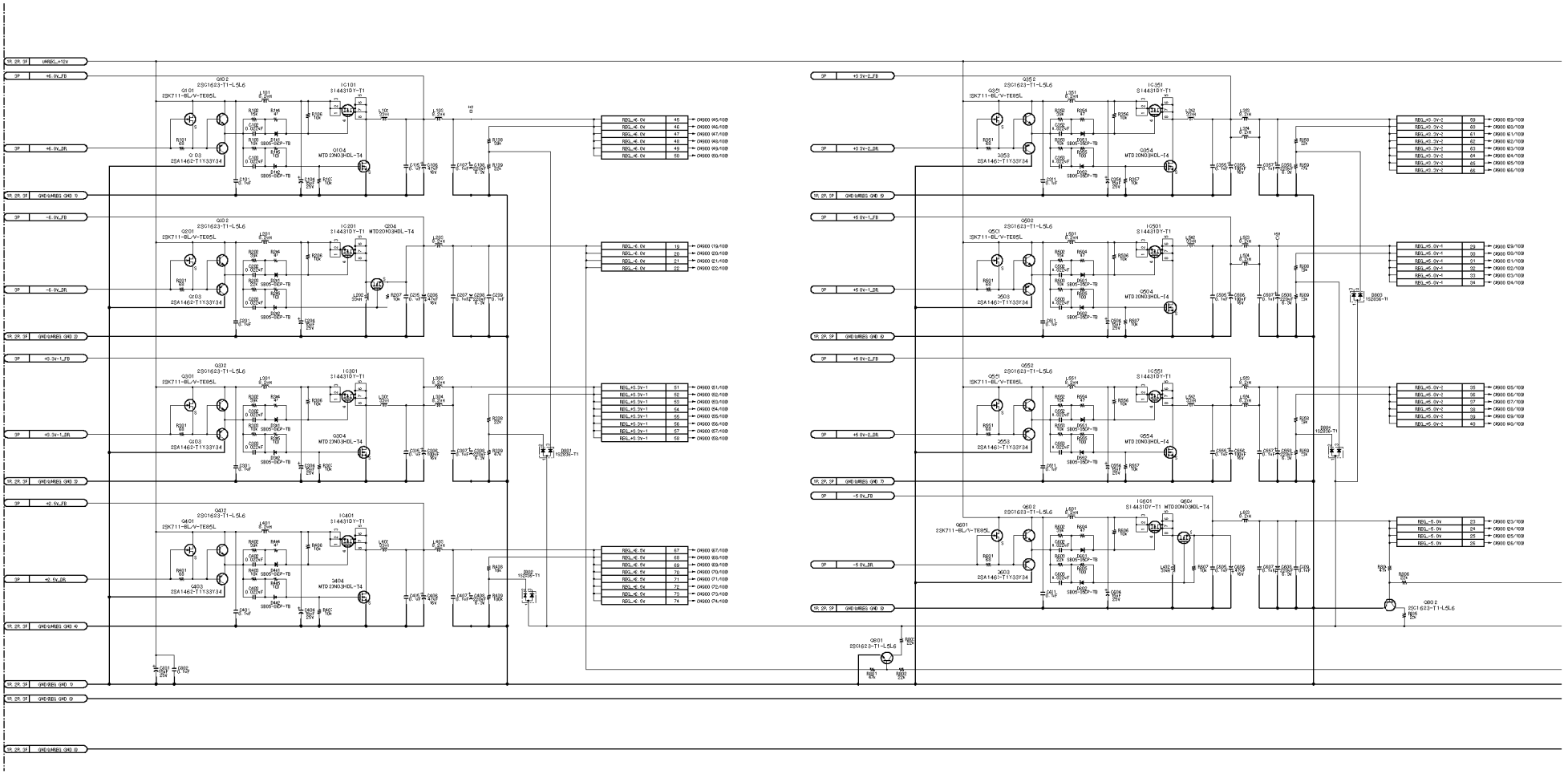

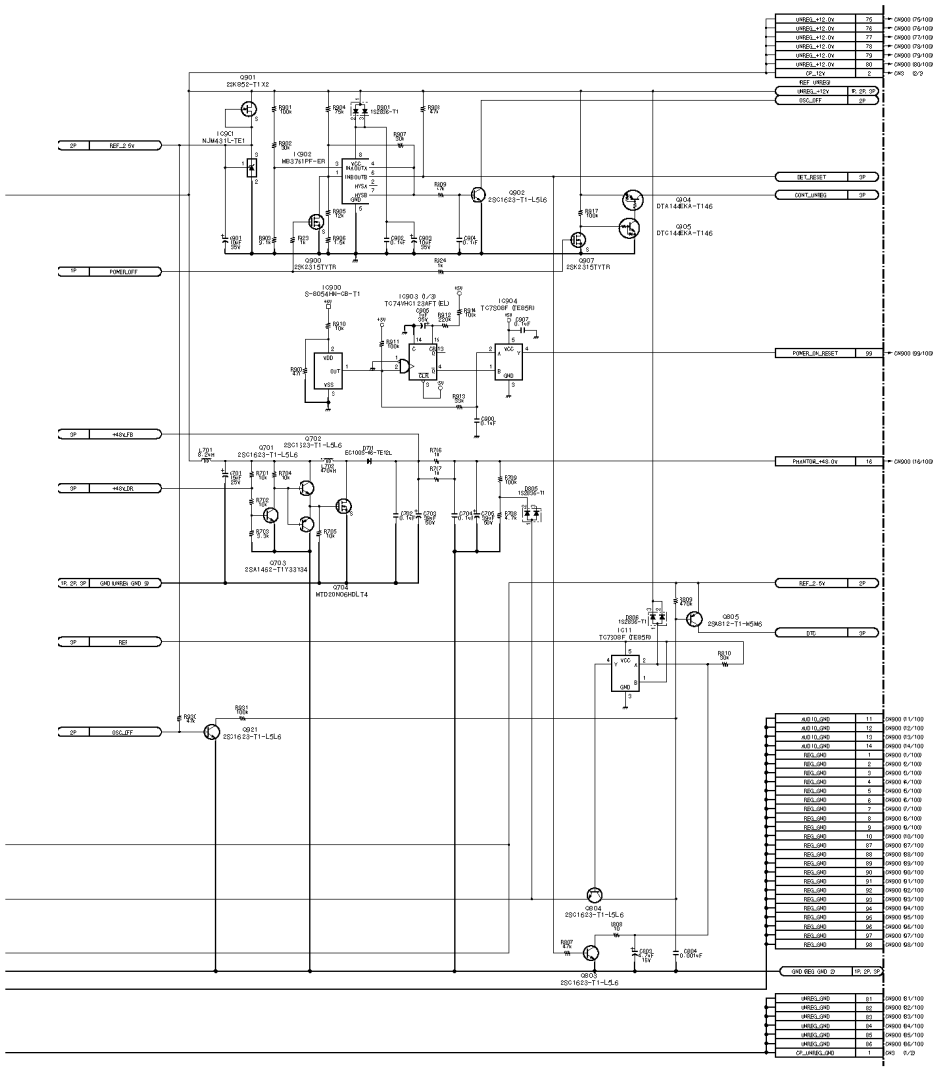

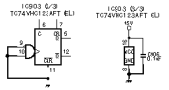

Switching regulator

RE-150 (2/3)

BOARD NO. 1-667-484-14

LOT NO. 905-

DNW-A22II_RE-150_001

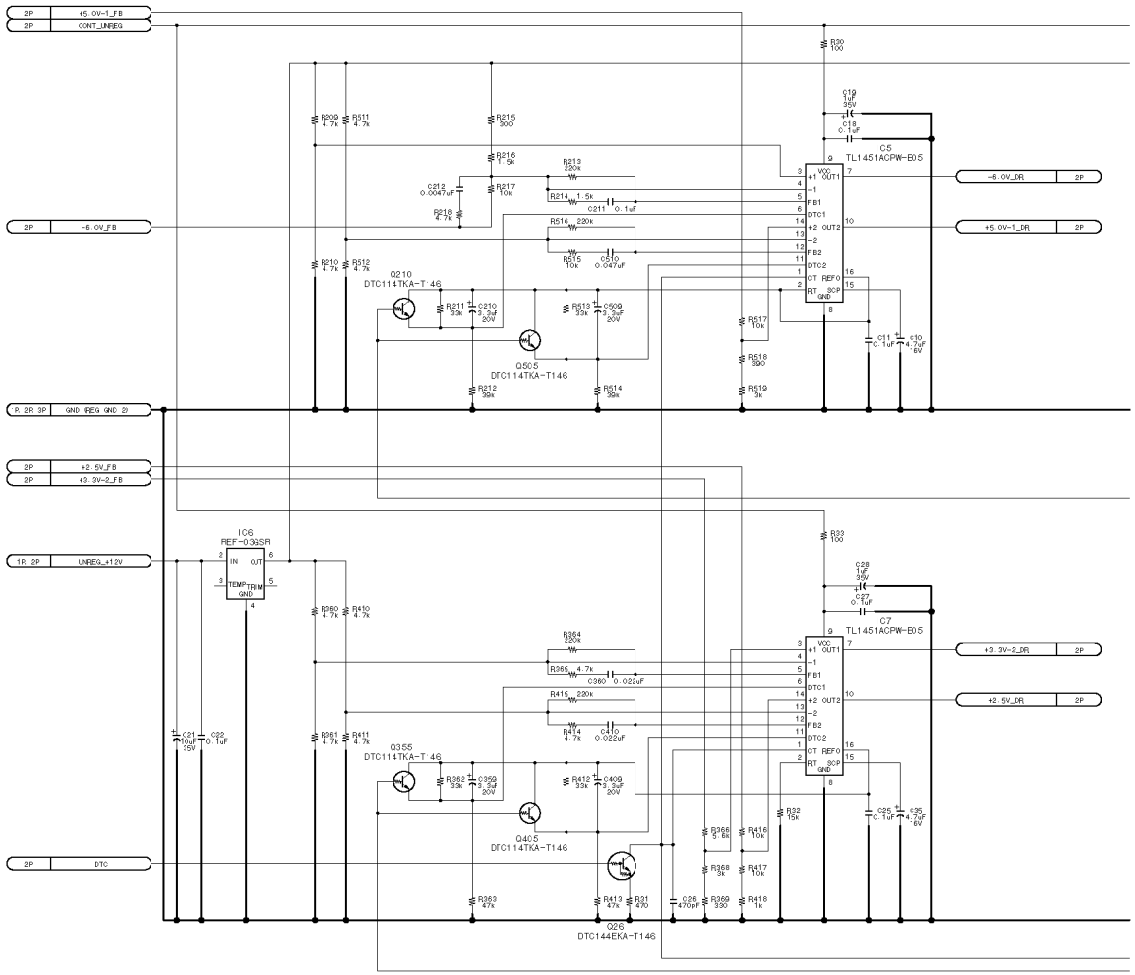
2P +5.0V-1_FB
2P CONT_UNREG
2P -6.0V_FB
R 2P 3P GND REG GND 2)
2P +2.5V_FB
2P +3.3V-2_FB
1R 2P UNREG_+12V
2P DTC
-6.0V_DR
+5.0V-1_DR
+3.3V-2_DR
+2.5V_DR
IC6
REF-03GSR
IN OUT
TEMP TRIM GND
TL1451ACPW-E05
Q210
DTC114TKA-T146
Q505
DTC114TKA-T146
Q355
DTC114TKA-T146
Q405
DTC114TKA-T146
Q26
DTC144EKA-T146

http://getMANUAL.com

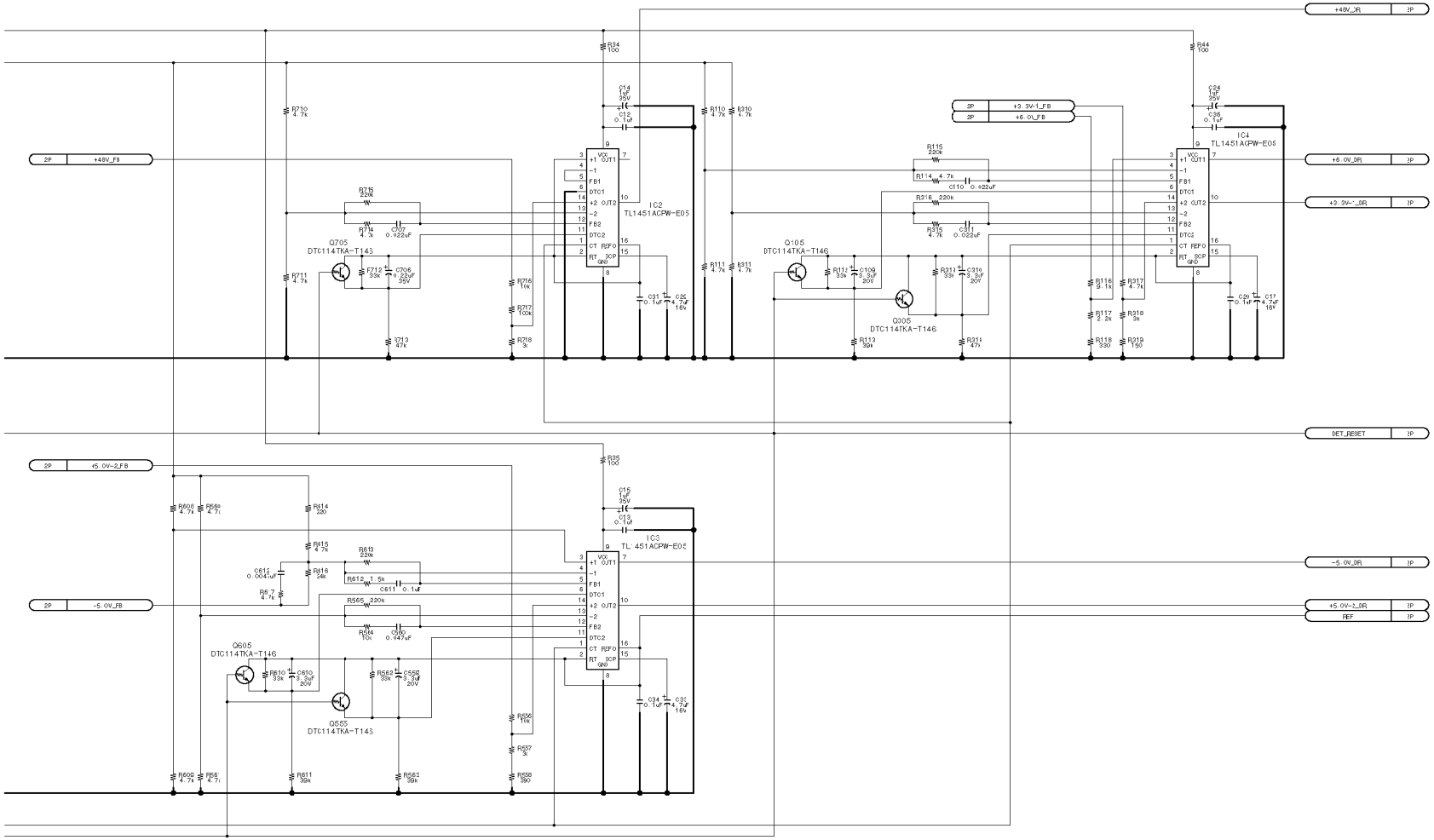

Switching regulator

RE-150 (3/3)

EOARD NO. 1-667-484-14
LOT NO. 905-
DNW-A220_RE-150_00'

DNW-A28
DNW-A28P

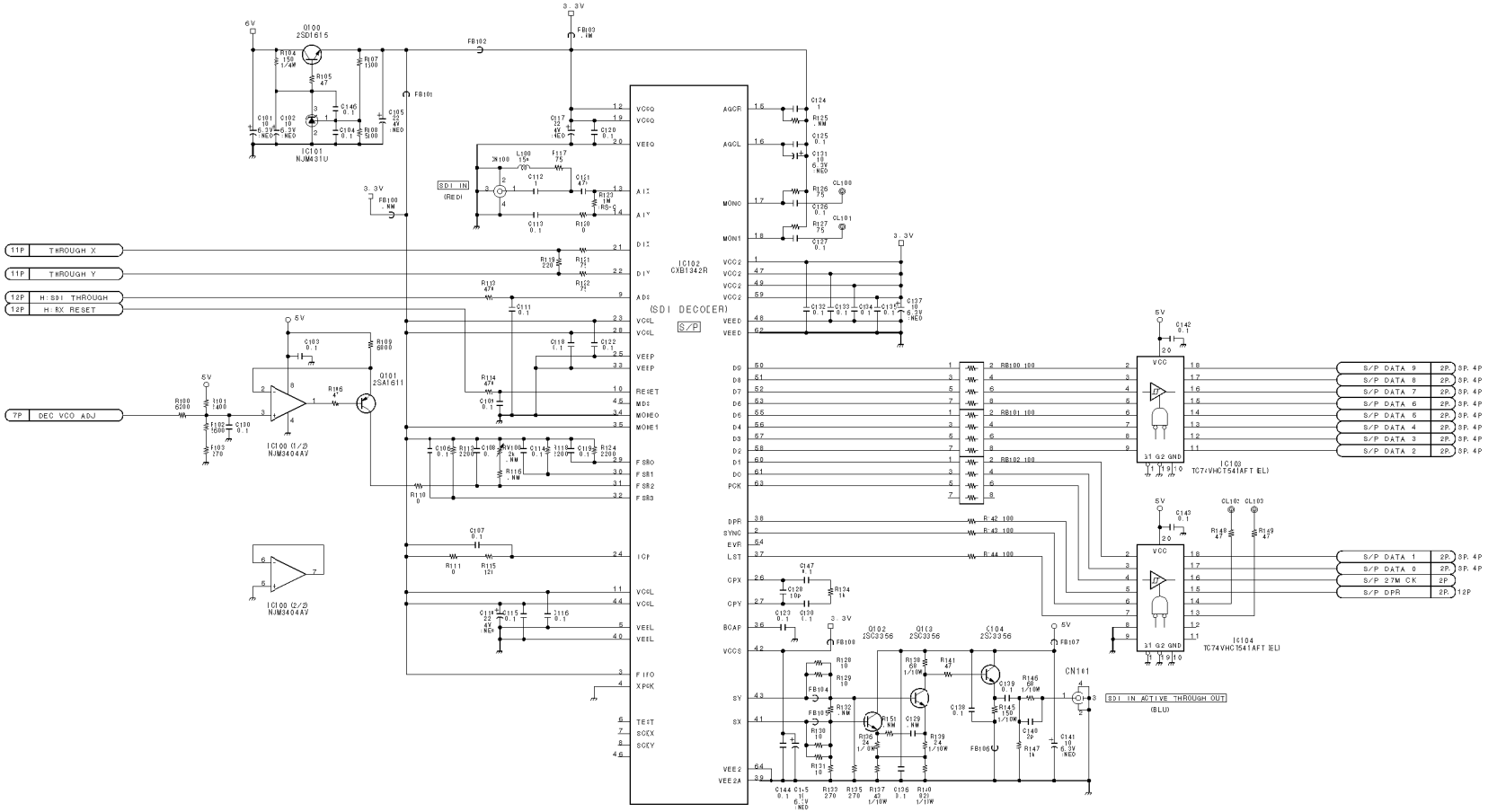

4:2:2 component serial digital interface

SDI-23 (1/13)

BOARD NO. 1-667-485-12

LOT NO. 905-

B-WDNWA220-SDI23-12@

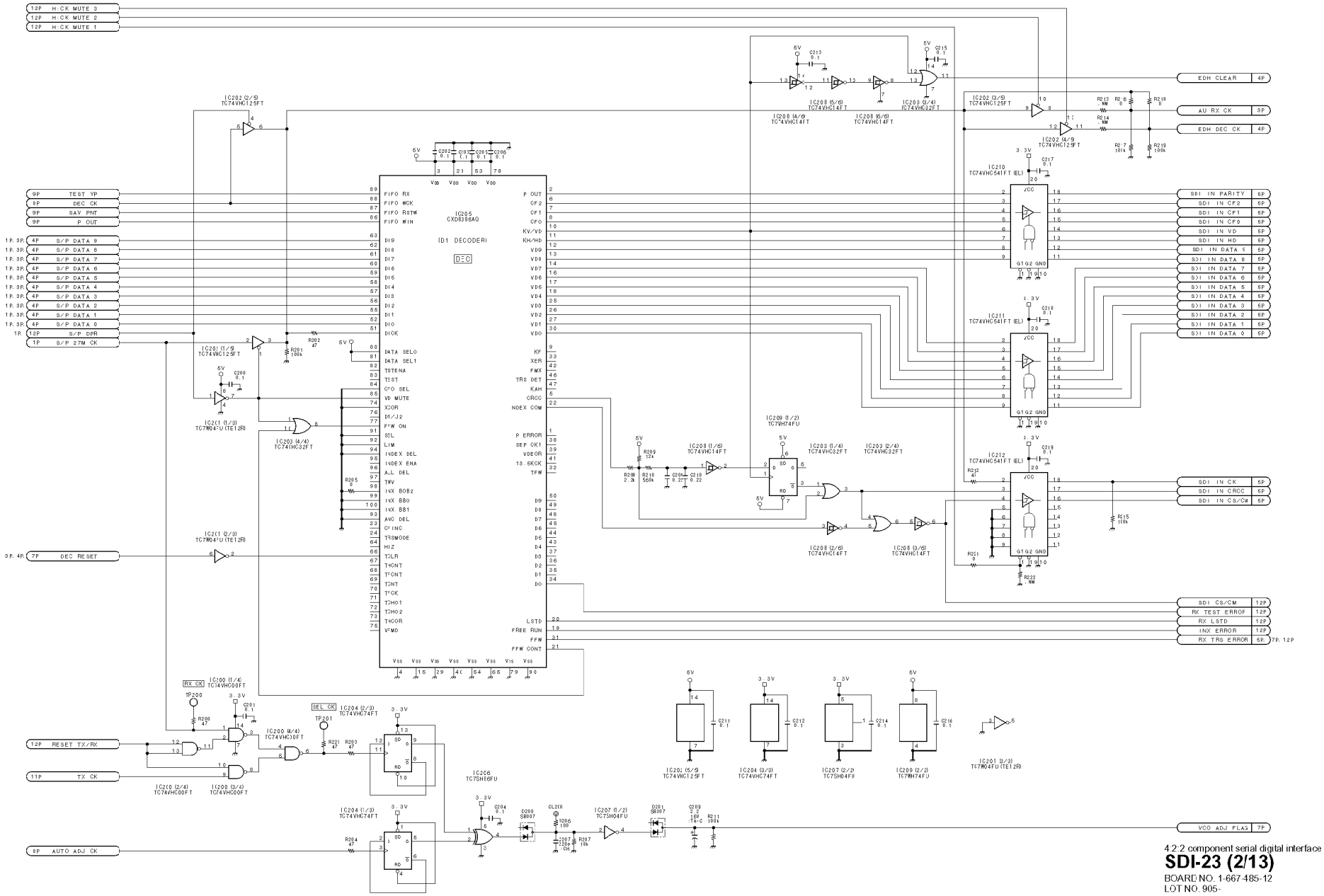

4:2:2 component serial digital interface

SDI-23 (2/13)

BOARD NO. 1-667-485-12

LOT NO. 905-

B-MDNWA220-SDI23-12@

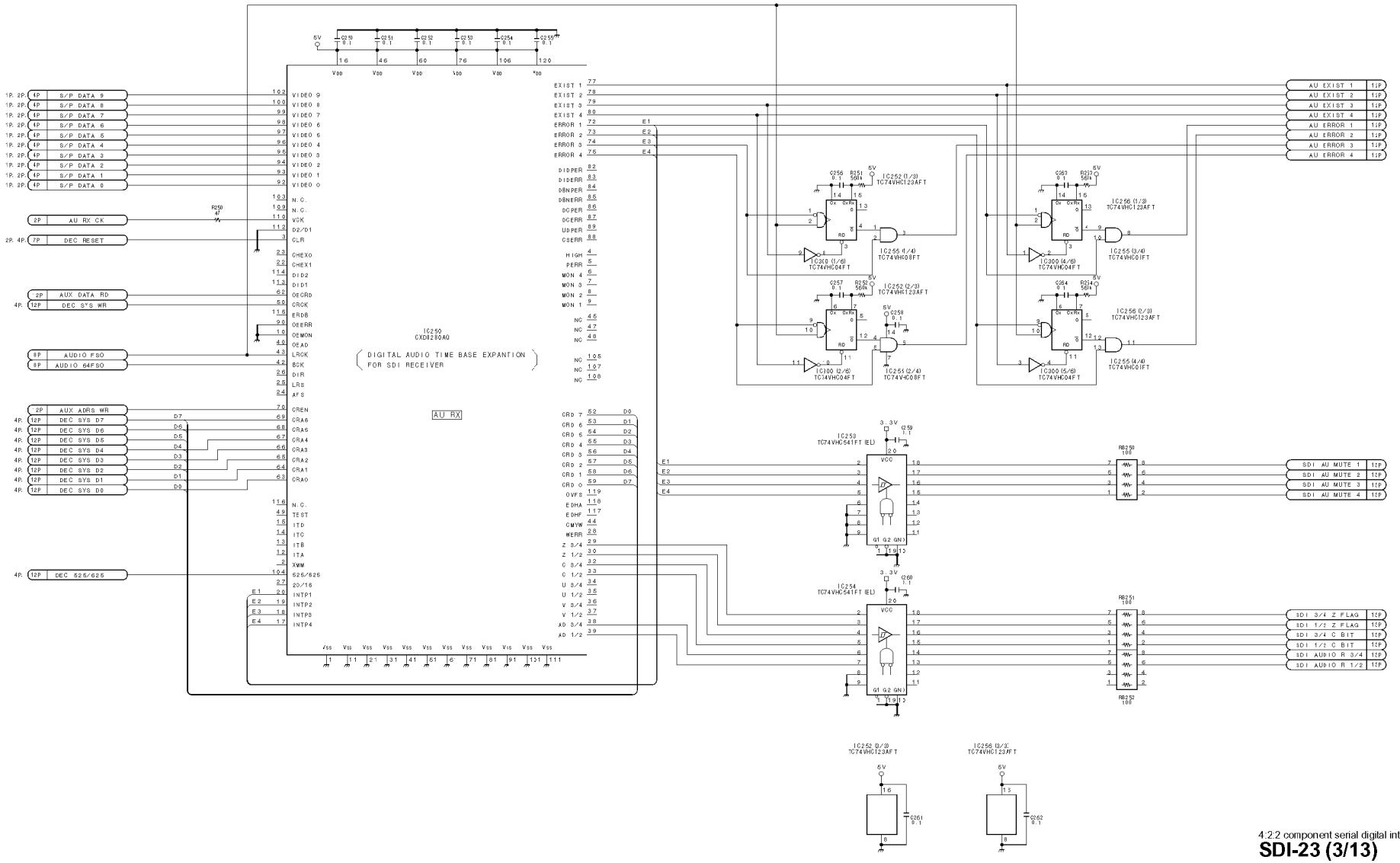

4:2:2 component serial digital interface

SDI-23 (3/13)

BOARD NO. 1-667-485-12
LOT NO. 905-

B-WDNWA220-SDI23-12@

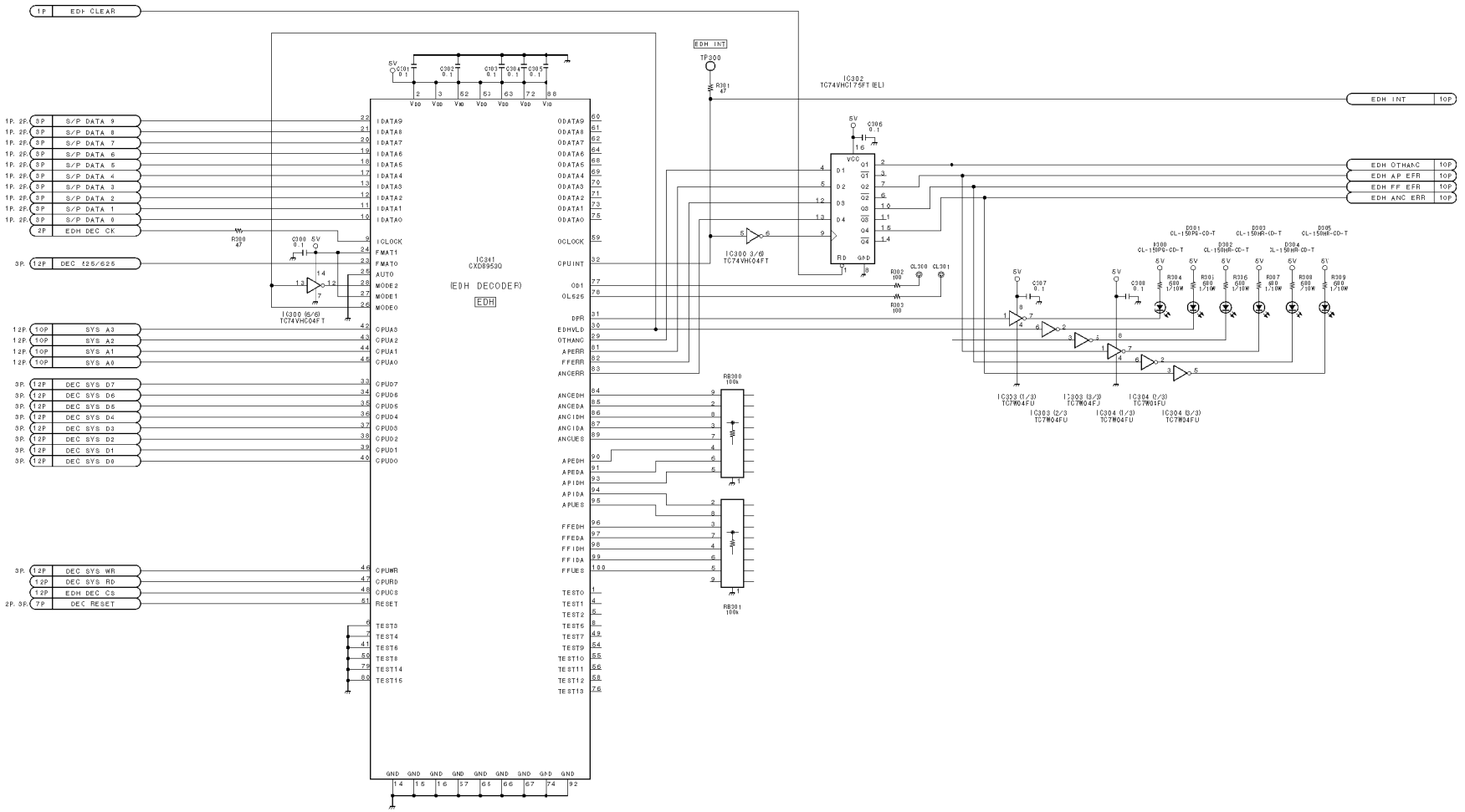

4:2:2 component serial digital interface

SDI-23 (4/13)

BOARD NO. 1-667-485-12

LOT NO. 905-

B-#DNWA220-SDI23-12@

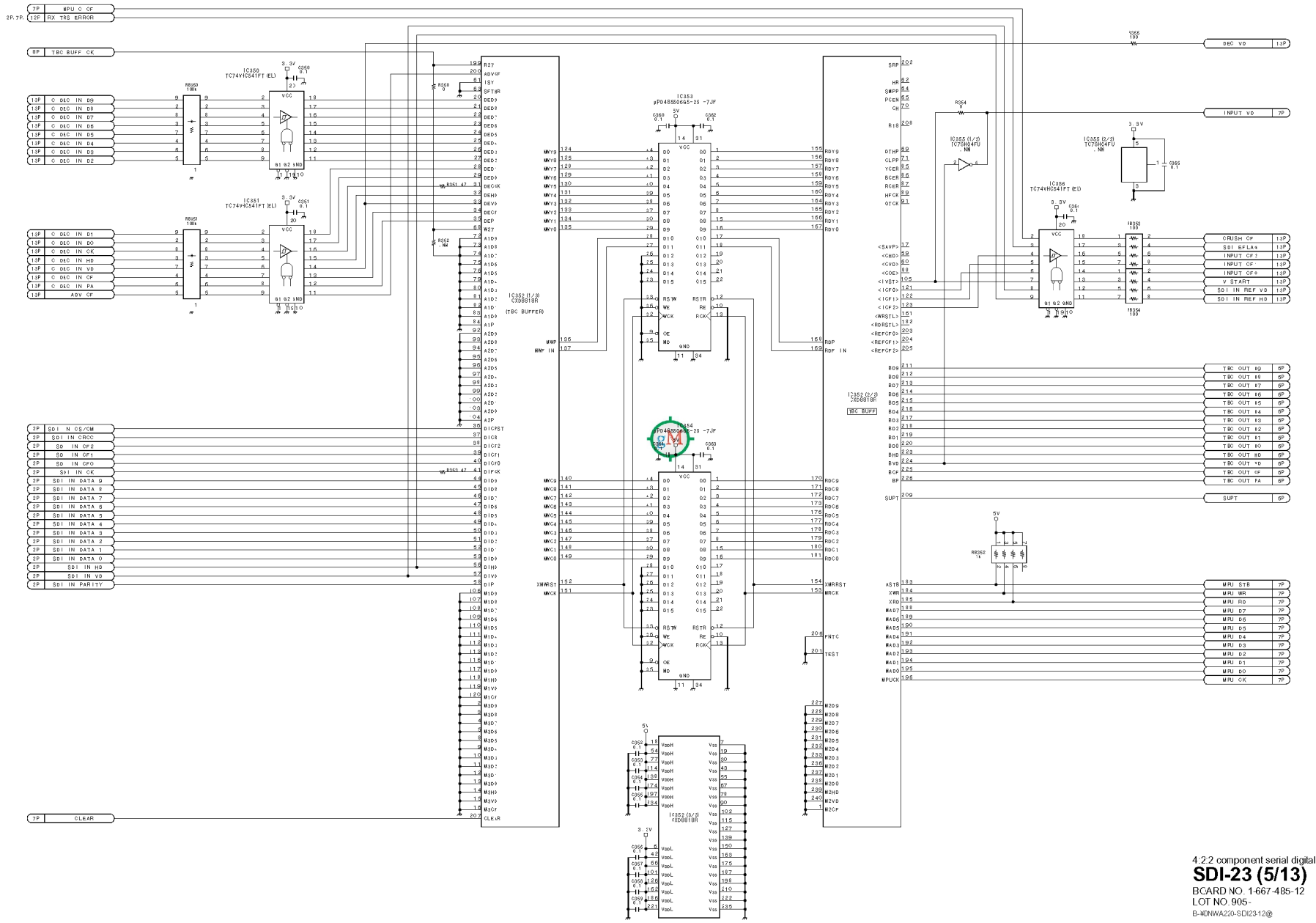

4:2:2 component serial digital interface

SDI-23 (5/13)

BOARD NO. 1-667-485-12

LOT NO. 905-

B-WDNWA220-SDI23-12@

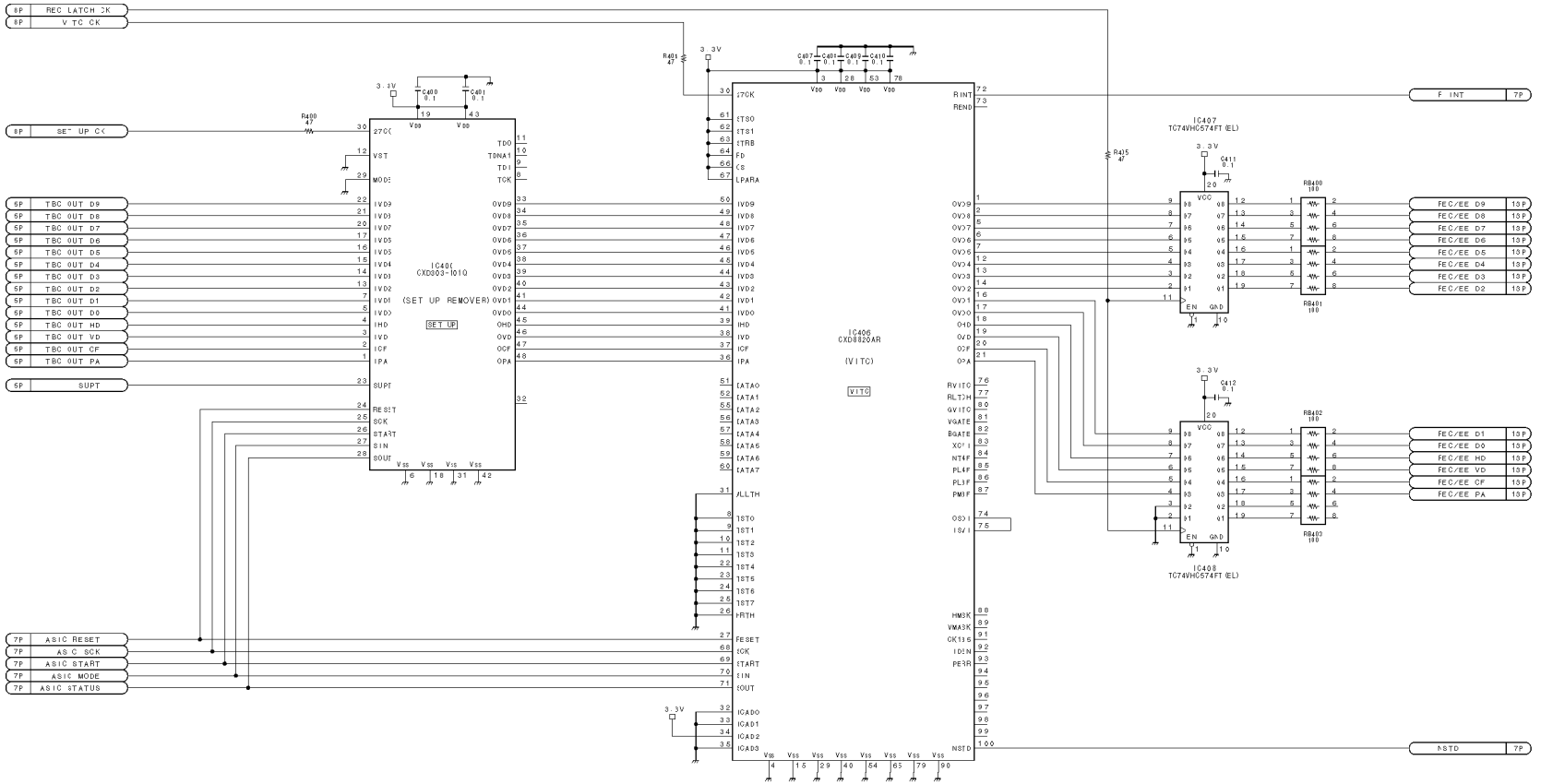

4:2:2 component serial digital interface

SDI-23 (6/13)

BOARD NO. 1-667-485-12

LOT NO. 905-

B-MDNWA220-SDI23-12@

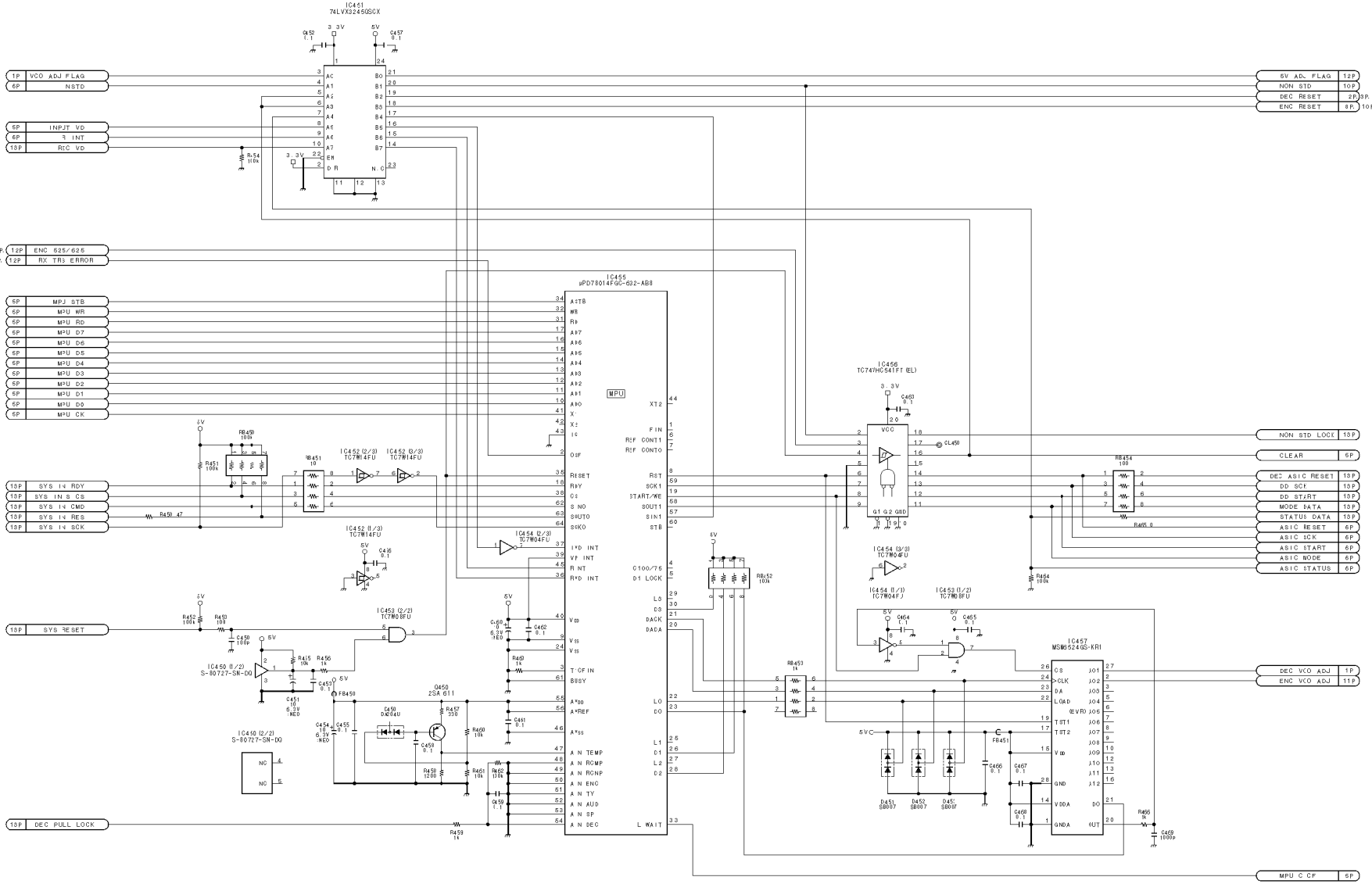

4:2:2 component serial digital interface

SDI-23 (7/13)

BOARD NO. 1-667-485-12

LOT NO. 905-

B-WDNWA220-SDI23-12@

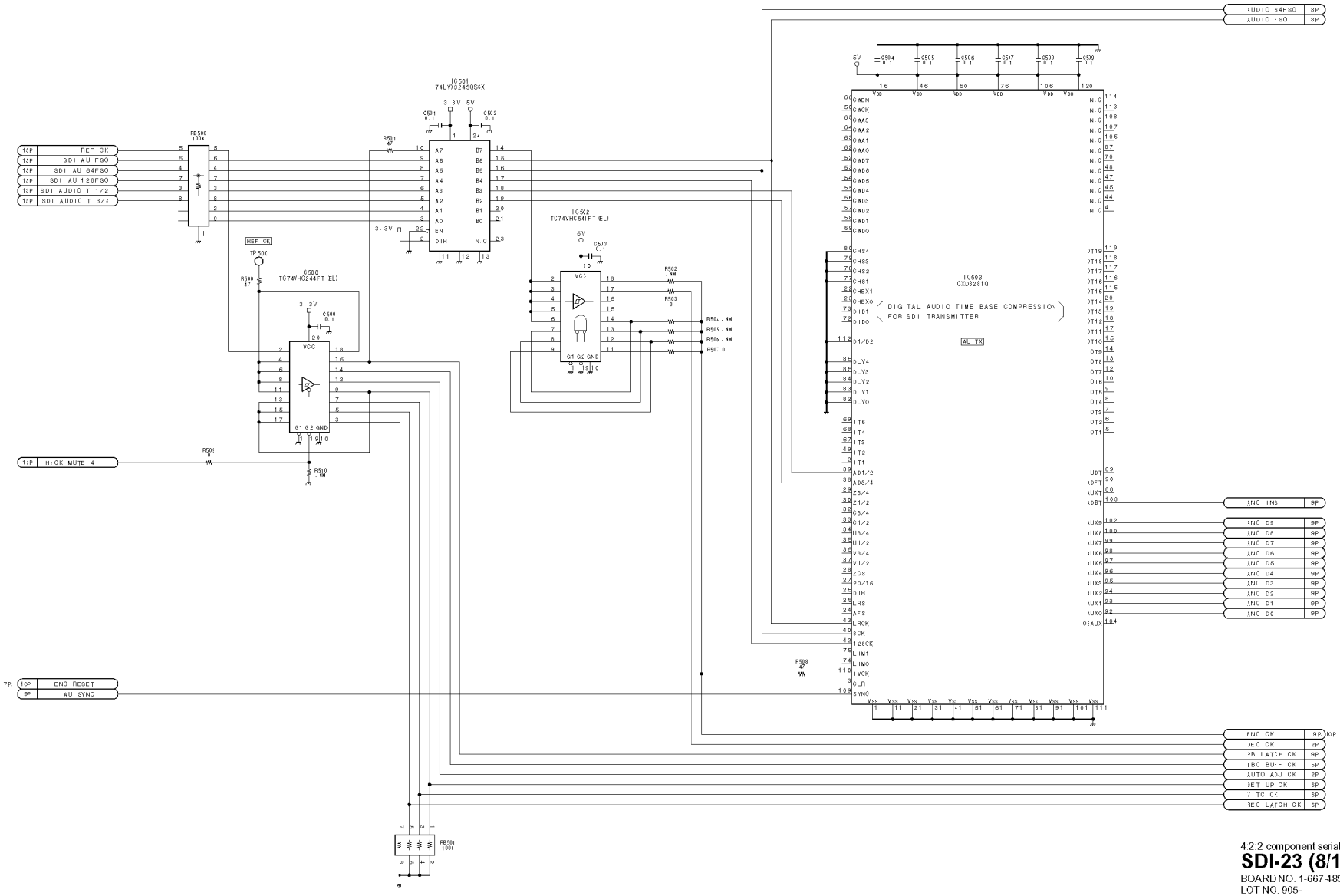

4:2:2 component serial digital interface

SDI-23 (8/13)

BOARD NO. 1-667-485-12

LOT NO. 905-

B-MDNWA220-SDI23-12@

DNW-A28

DNW-A28P

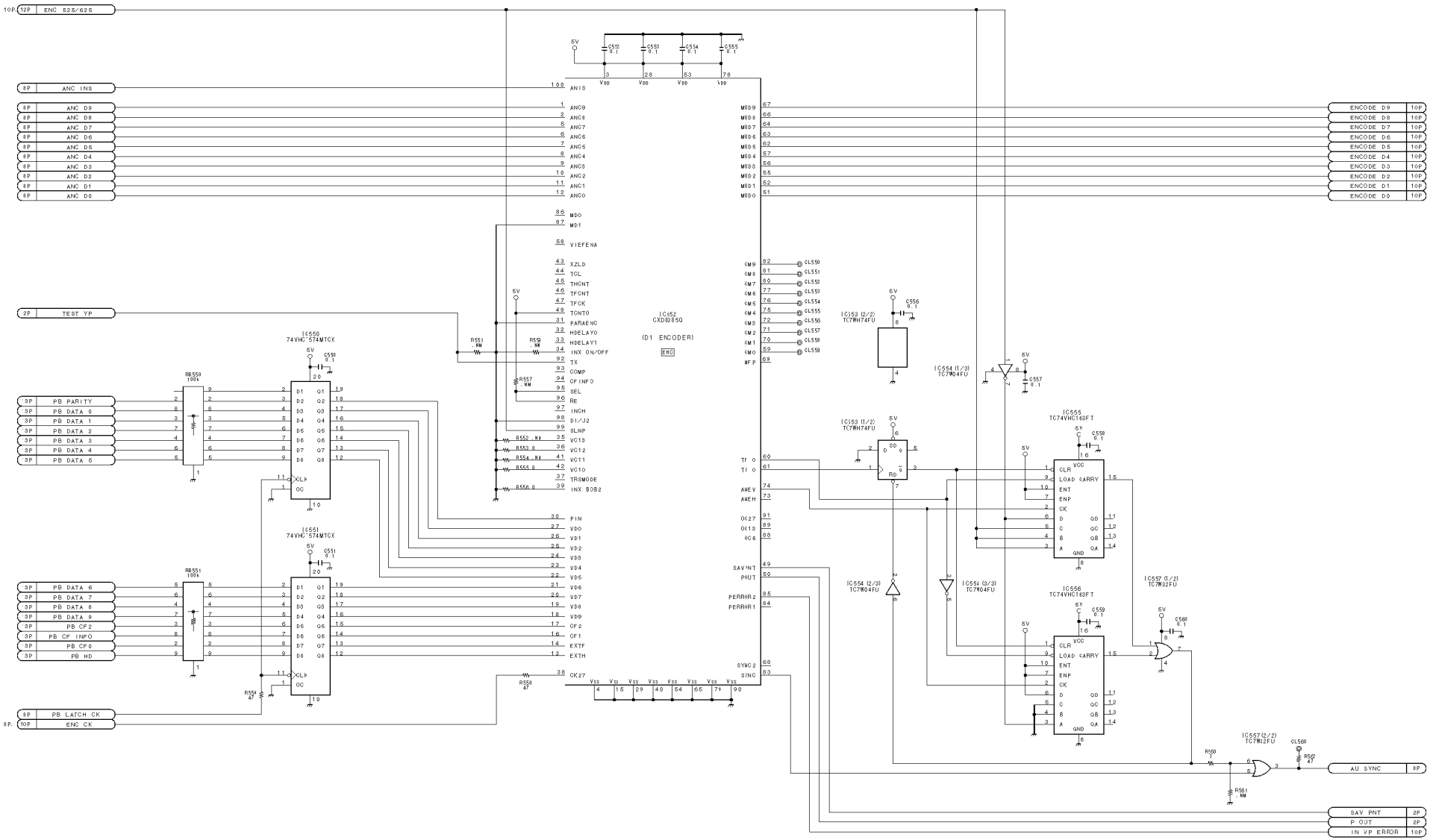

4:2:2 component serial digital interface

SDI-23 (9/13)

BOARD NO. 1-667-485-12

LOT NO. 905-

B-WDNWA220-SDI23-12@

http://getMANUAL.com

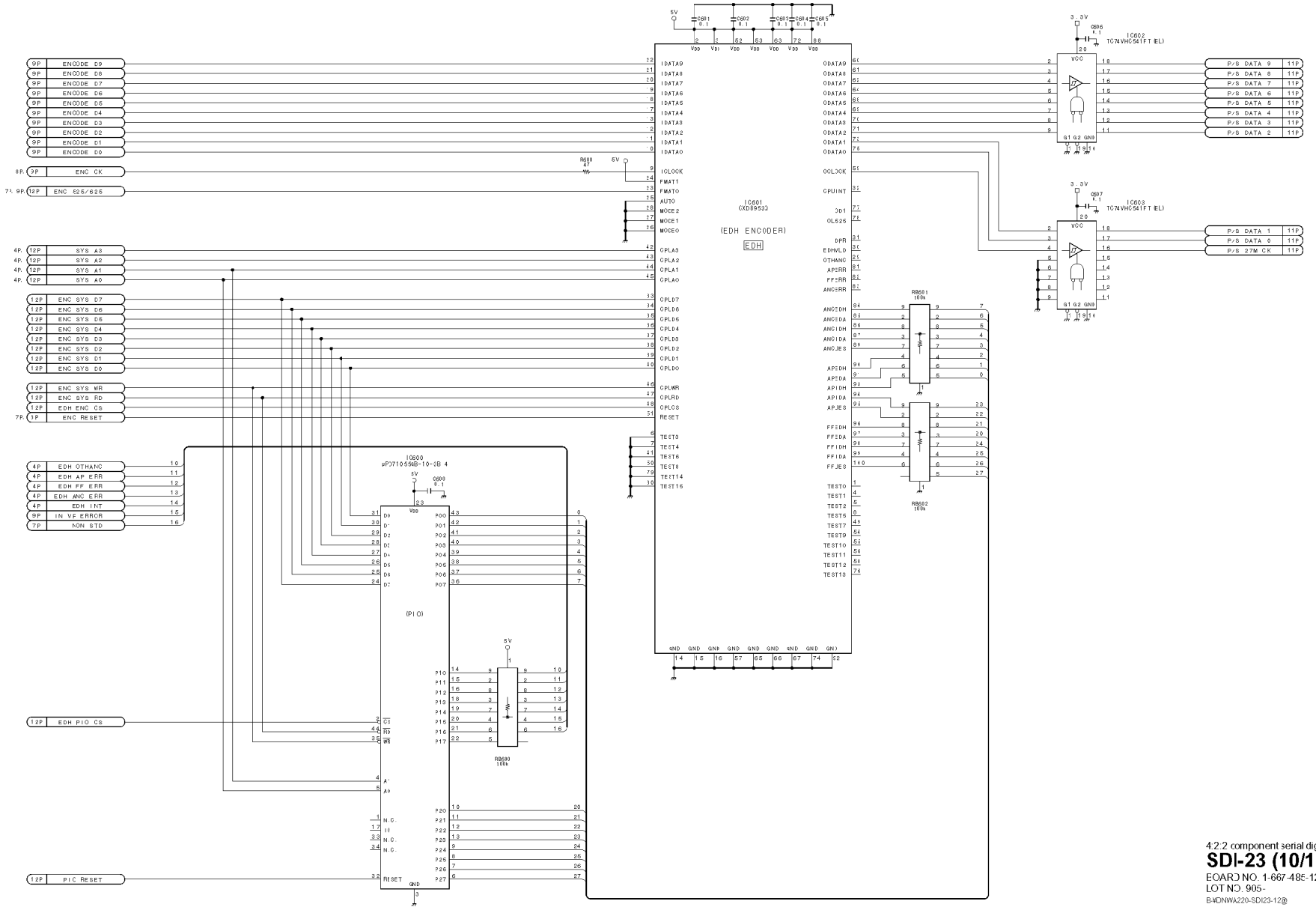

4:2:2 component serial digital interface

SDI-23 (10/13)

BOARD NO. 1-667-485-12

LOT NO. 905-

B-MDNWA220-SDI23-12@

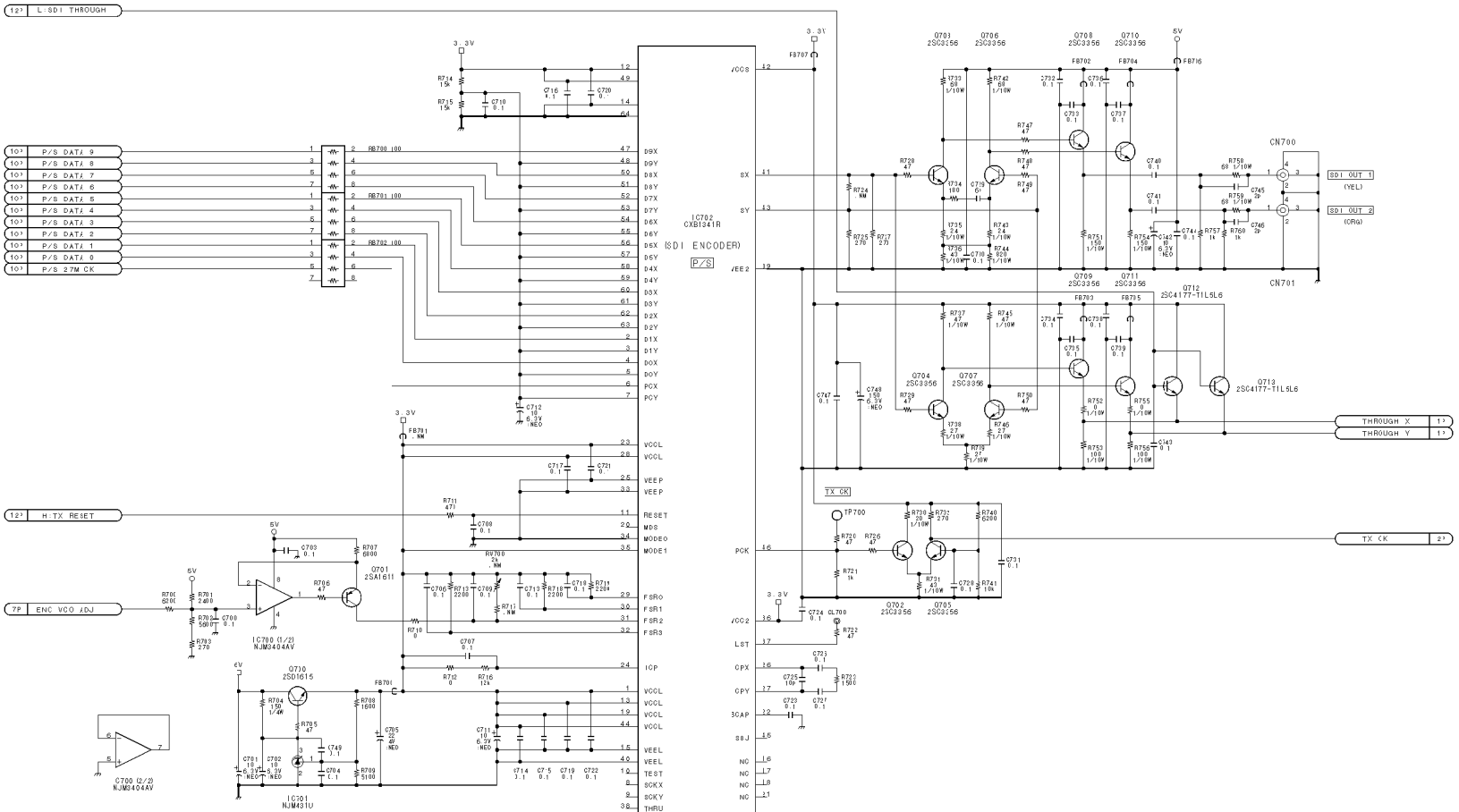

4:2:2 component serial digital interface

SDI-23 (11/13)

BOARD NO. 1-667-485-12

LOT NO. 905-

B-WDNWA220-SDI23-12@

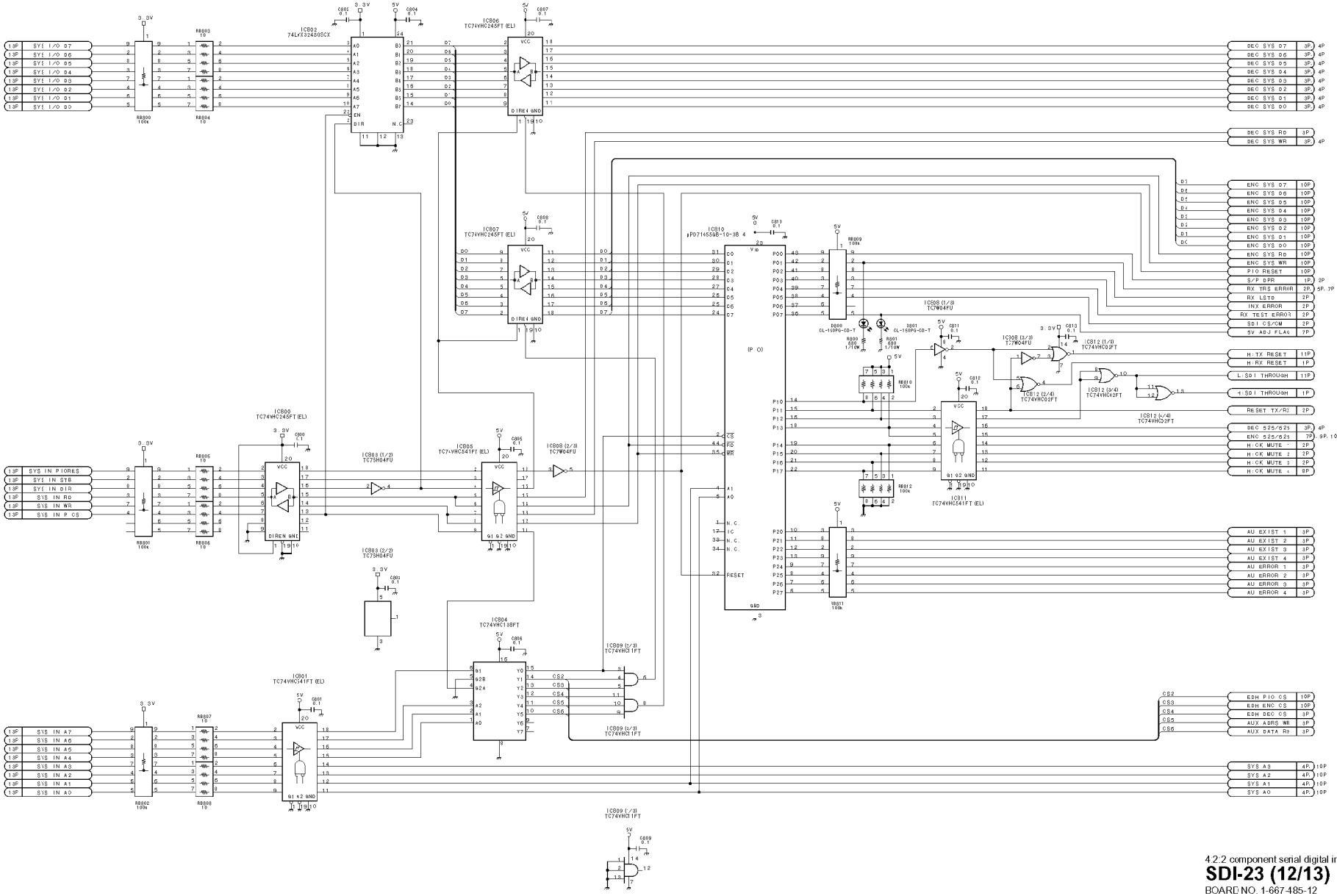

4:2:2 component serial digital interface

SDI-23 (12/13)

BOARD NO. 1-667-485-12

LOT NO. 905-

B-#DNWA220-SDI23-12@

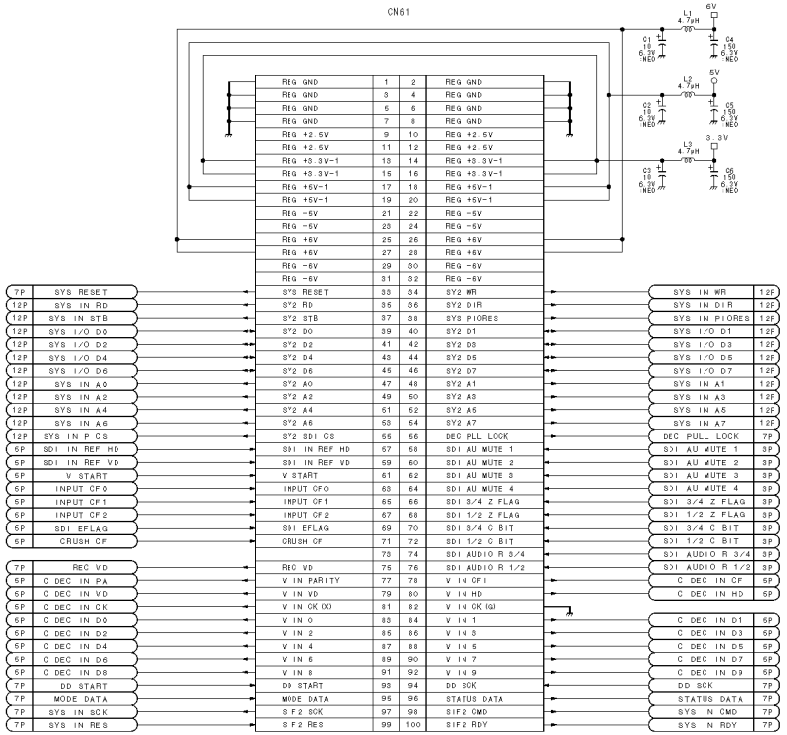

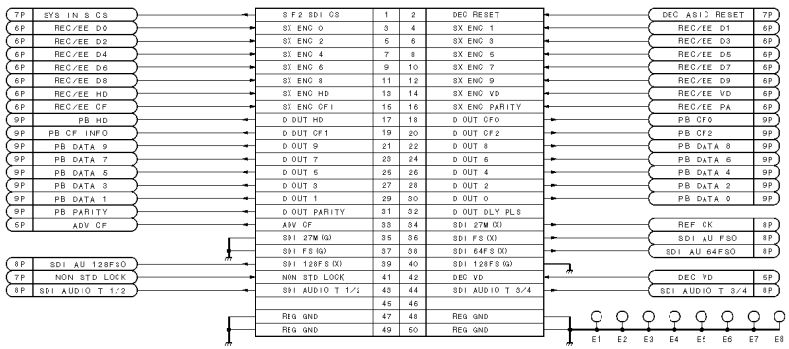

4:2:2 component serial digital interface

SDI-23 (13/13)

BOARD NO. 1-667-485-12
LOT NO. 905-

B-WDNWA220-SDI23-12@

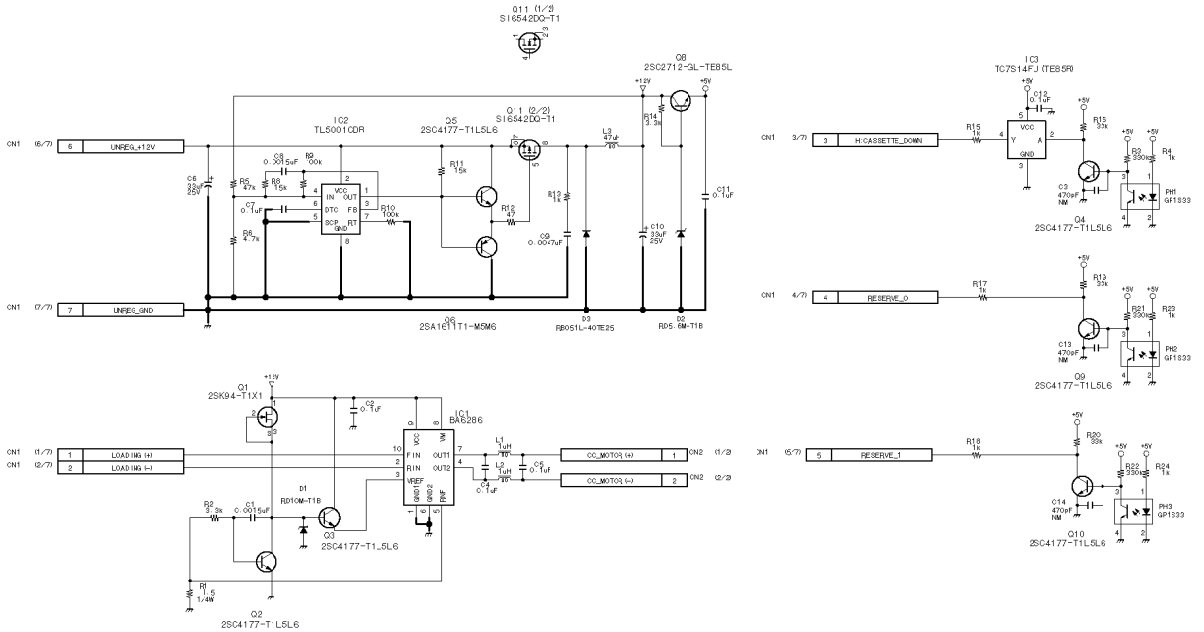

Cassette compartment

SE-529

BOARD NO. 1-675-101-12, 13
LOT NO. 905-
DNW-A28_SE-529_01

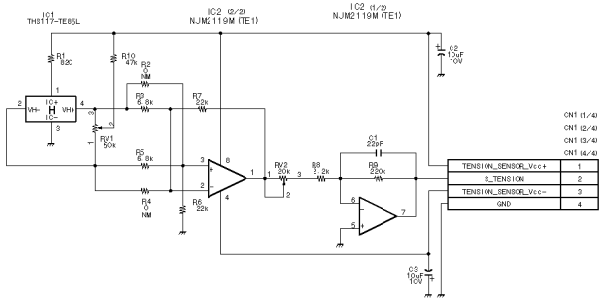

S tension sensor

SR-65

BOARD NO. 1-667-486-12
LOT NO. 905-
DNW-A220_SR-65_012

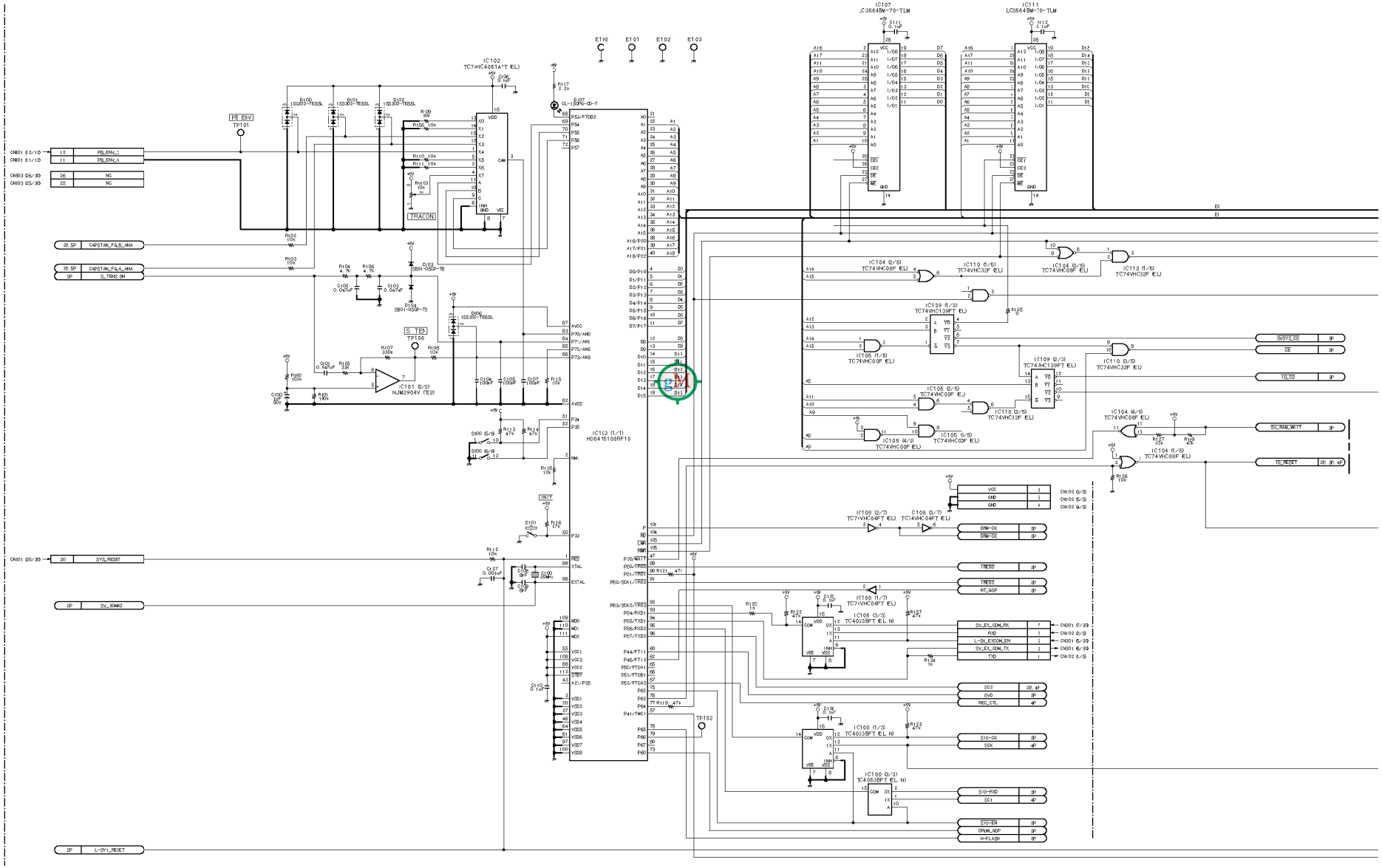

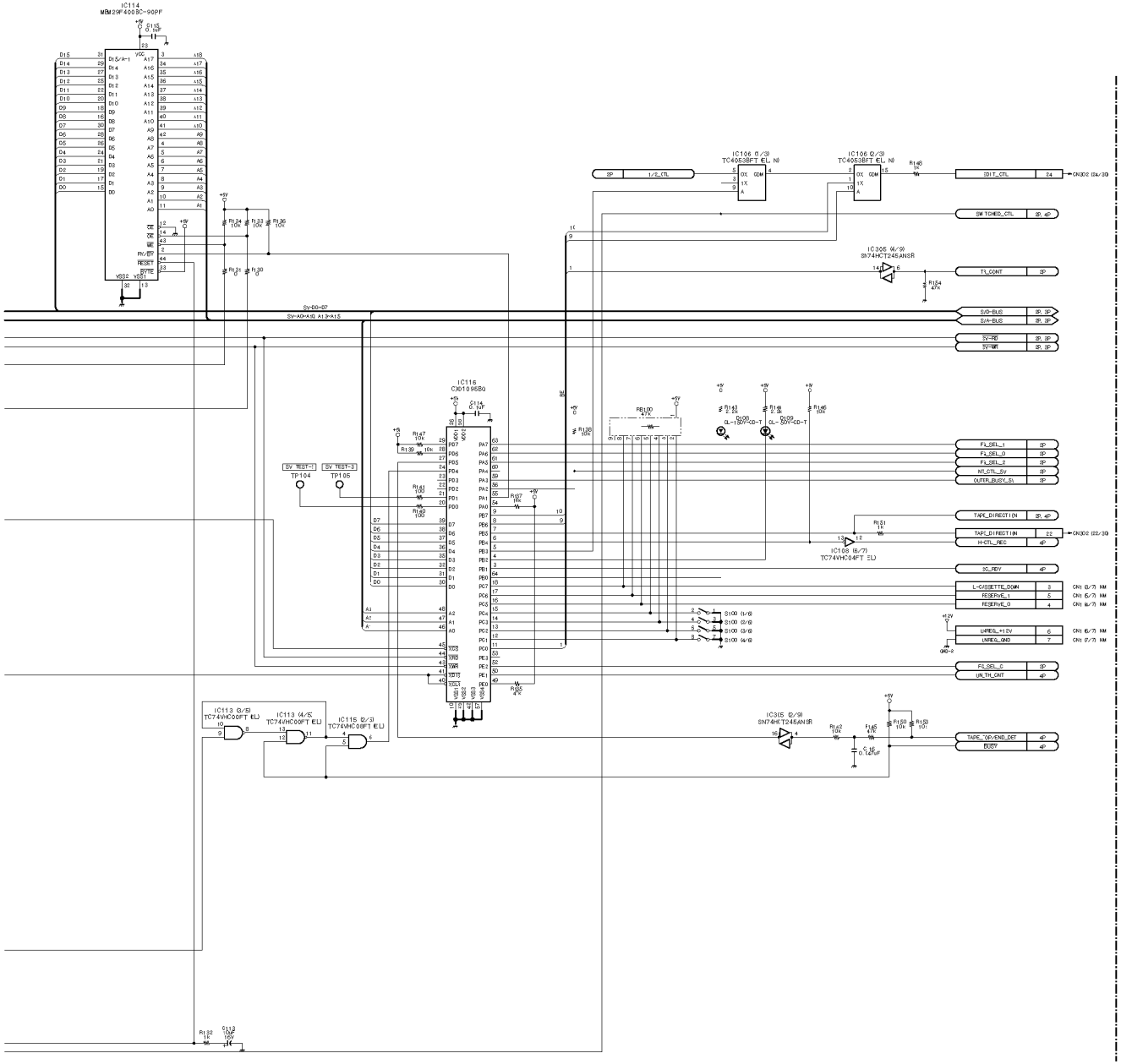

Servo control, Moto: driver, Sensors

SV-194A (1/7)

BOARD NO. 1-667-487-17

LOT NO. 905-

DNW-A22II_SV-194_003

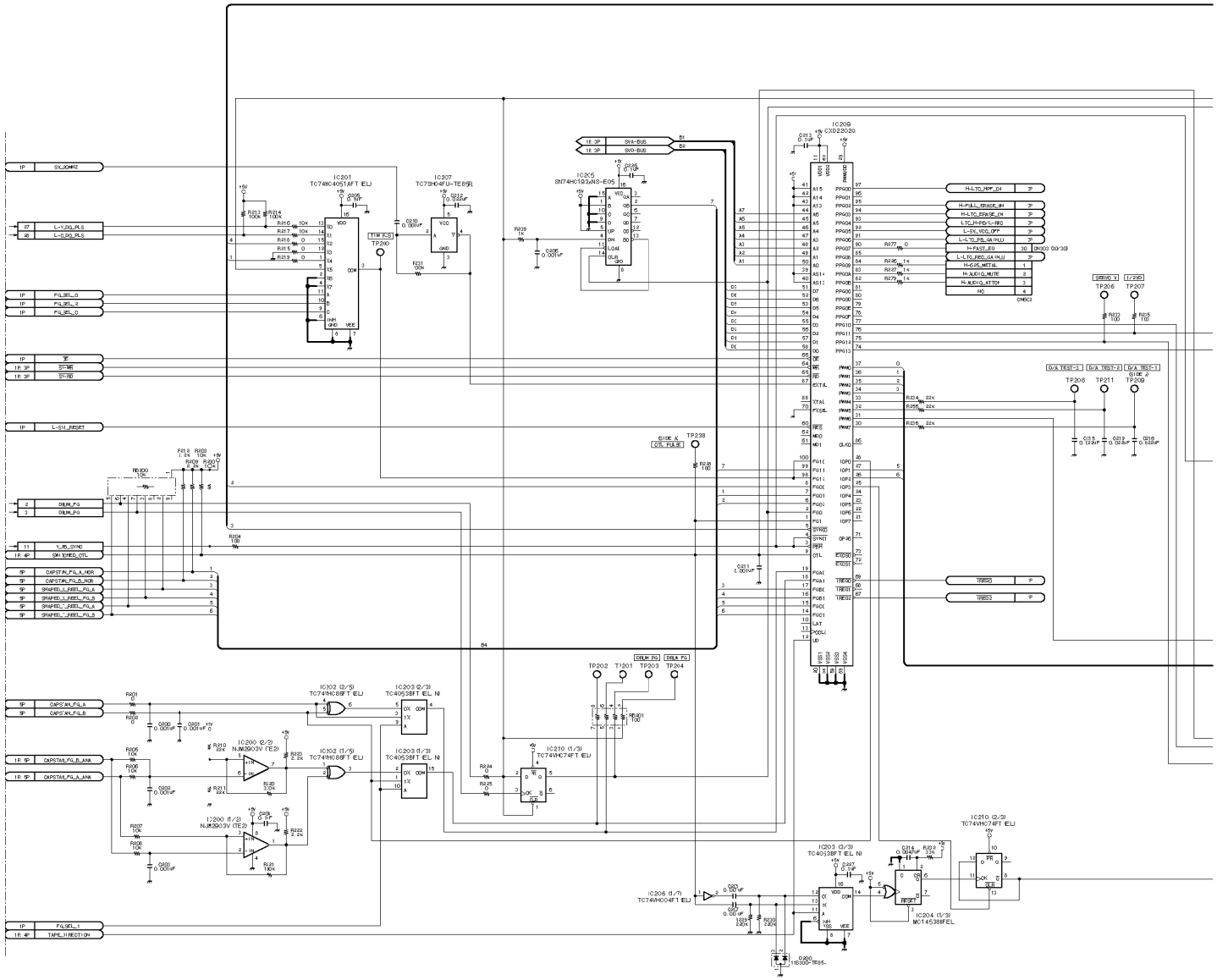

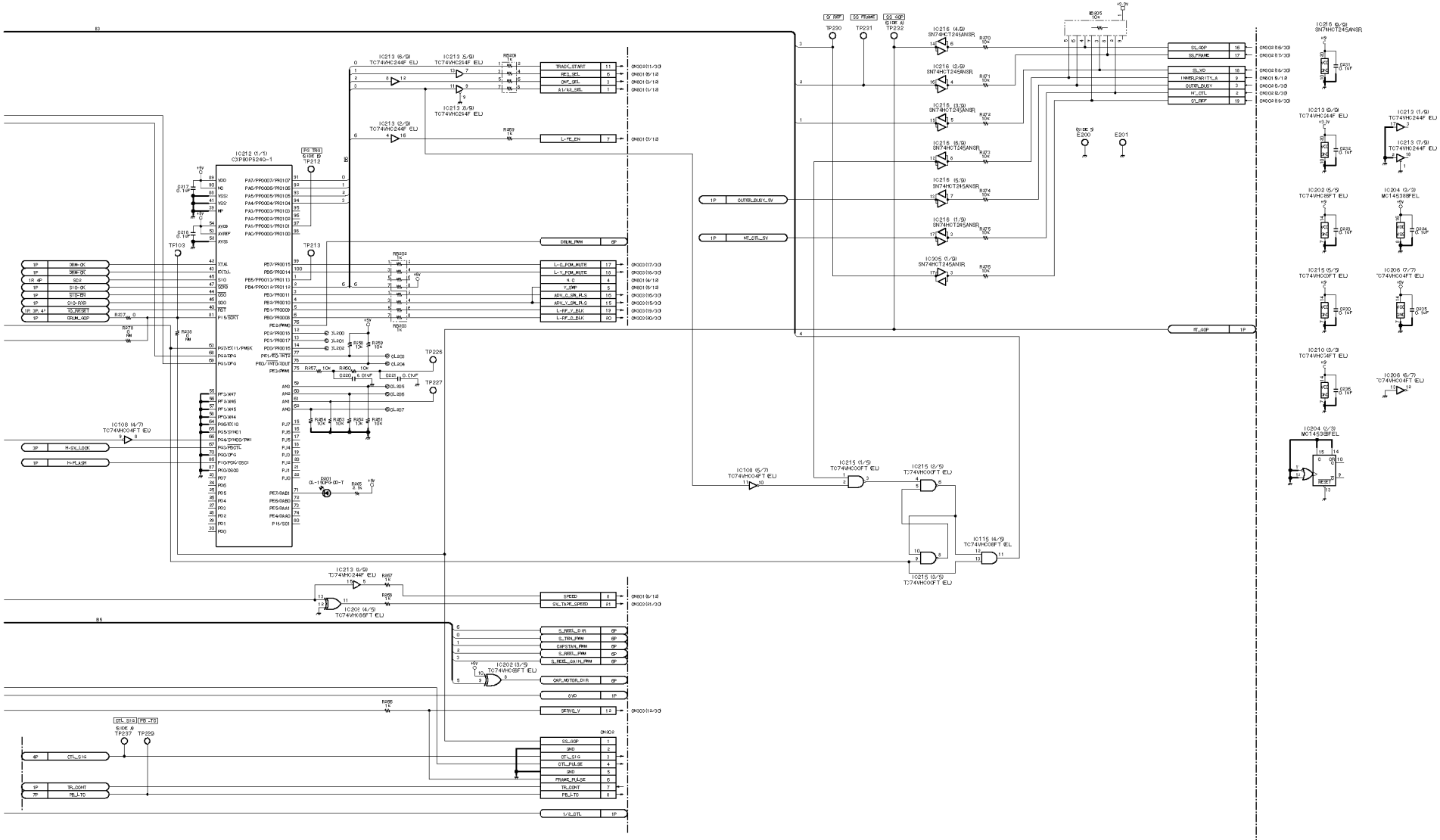

Servo control, Moto: driver, Sensors

SV-194A (2/7)

BOARD NO. 1-667-487-17

LOT NO. 905-

DNW-A22II_SV-194_003

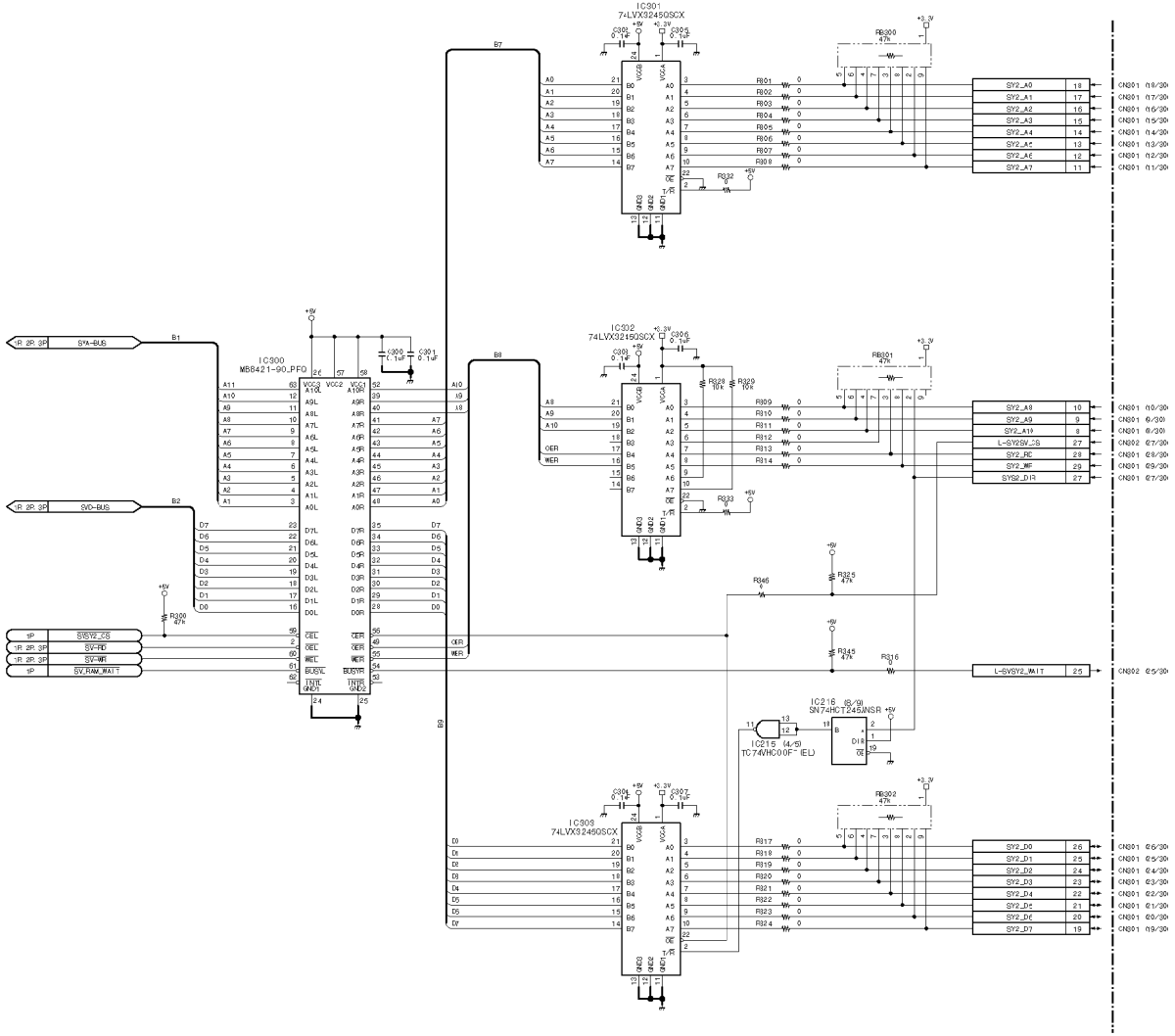
IC301
74LVX3245QSCX
IC302
74LVX3245QSCX
IC303
74LVX3245QSCX
IC300
MB8421-90PFQ
IC216
SN74HCT245NSR
IC215
TC74VHC00F
SYA-BUS
SYD-BUS
SYSY2_CS
SV-RD
SV-WR
SV_RAM_WAIT
L-SYSY2_WAIT
SY2_A0
SY2_A1
SY2_A2
SY2_A3
SY2_A4
SY2_A5
SY2_A6
SY2_A7
SY2_A8
SY2_A9
SY2_A10
L-SYSY2_CS
SY2_RD
SY2_WR
SY2_DIR
SY2_D0
SY2_D1
SY2_D2
SY2_D3
SY2_D4
SY2_D5
SY2_D6
SY2_D7

http://getMANUAL.com

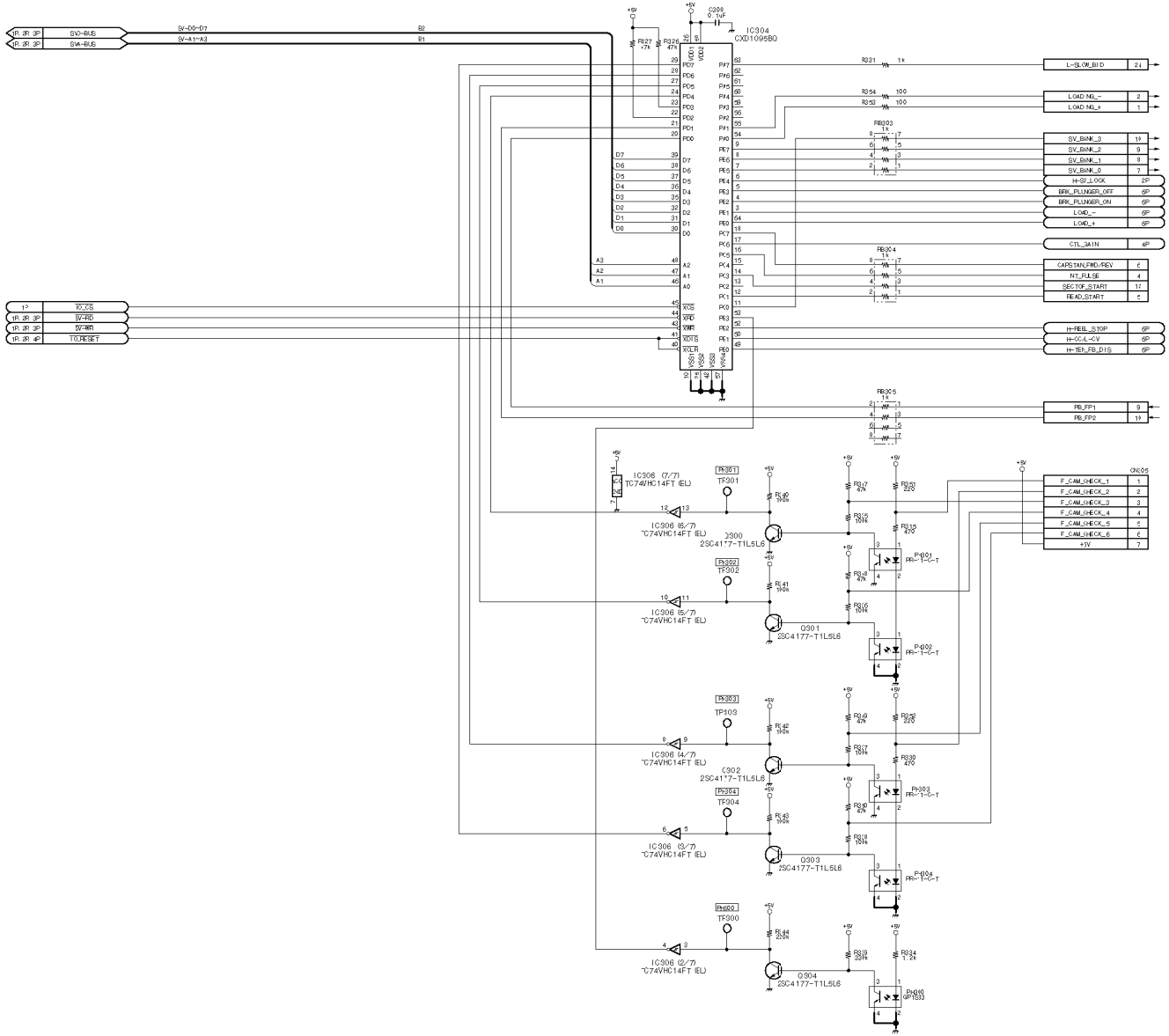

Servo control, Motor driver, Sensors

SV-194A (3/7)

BOARD NO. 1-667-487-17

LOT NO. 905-

DNW-A220_SV-194_003

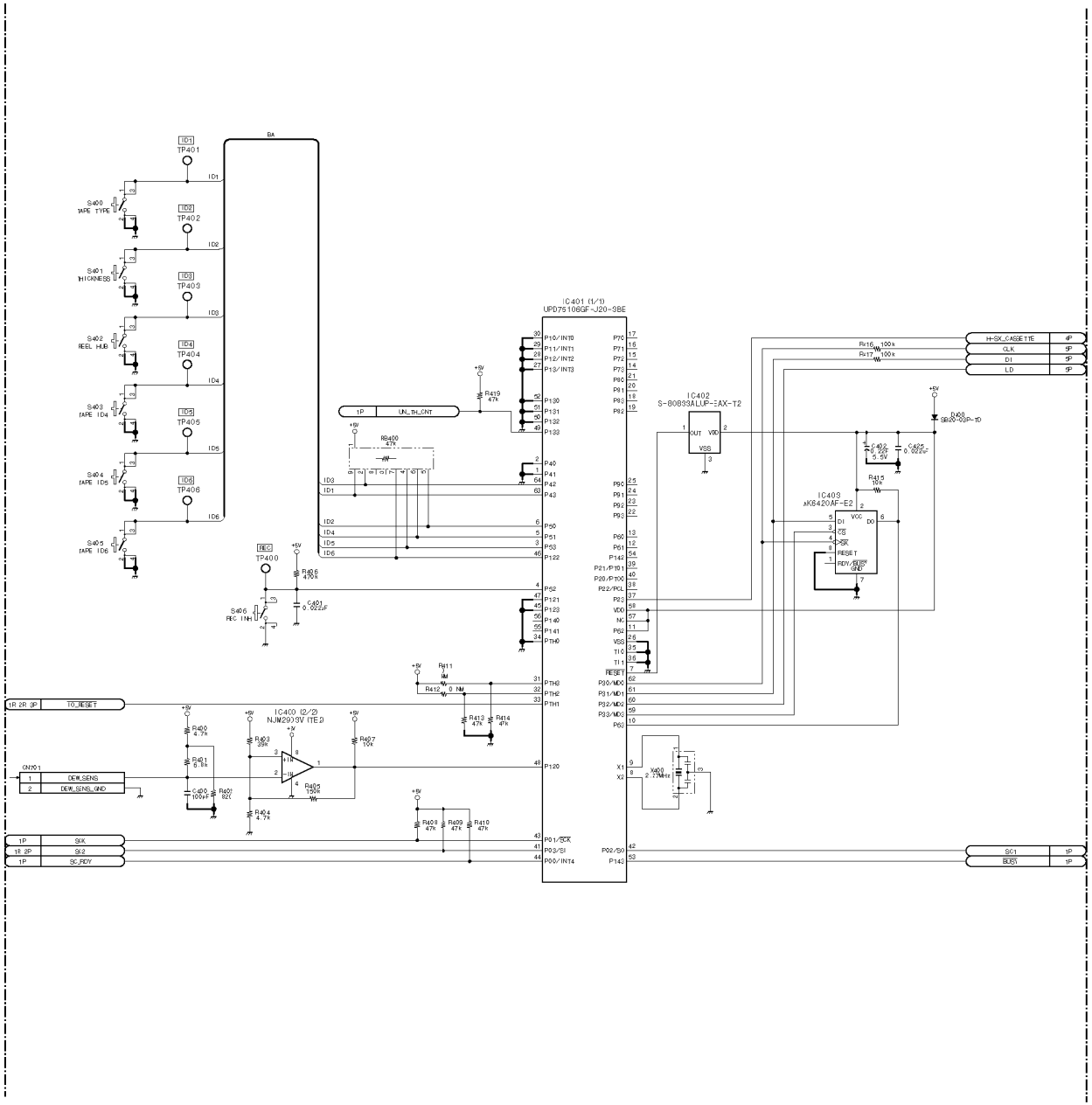

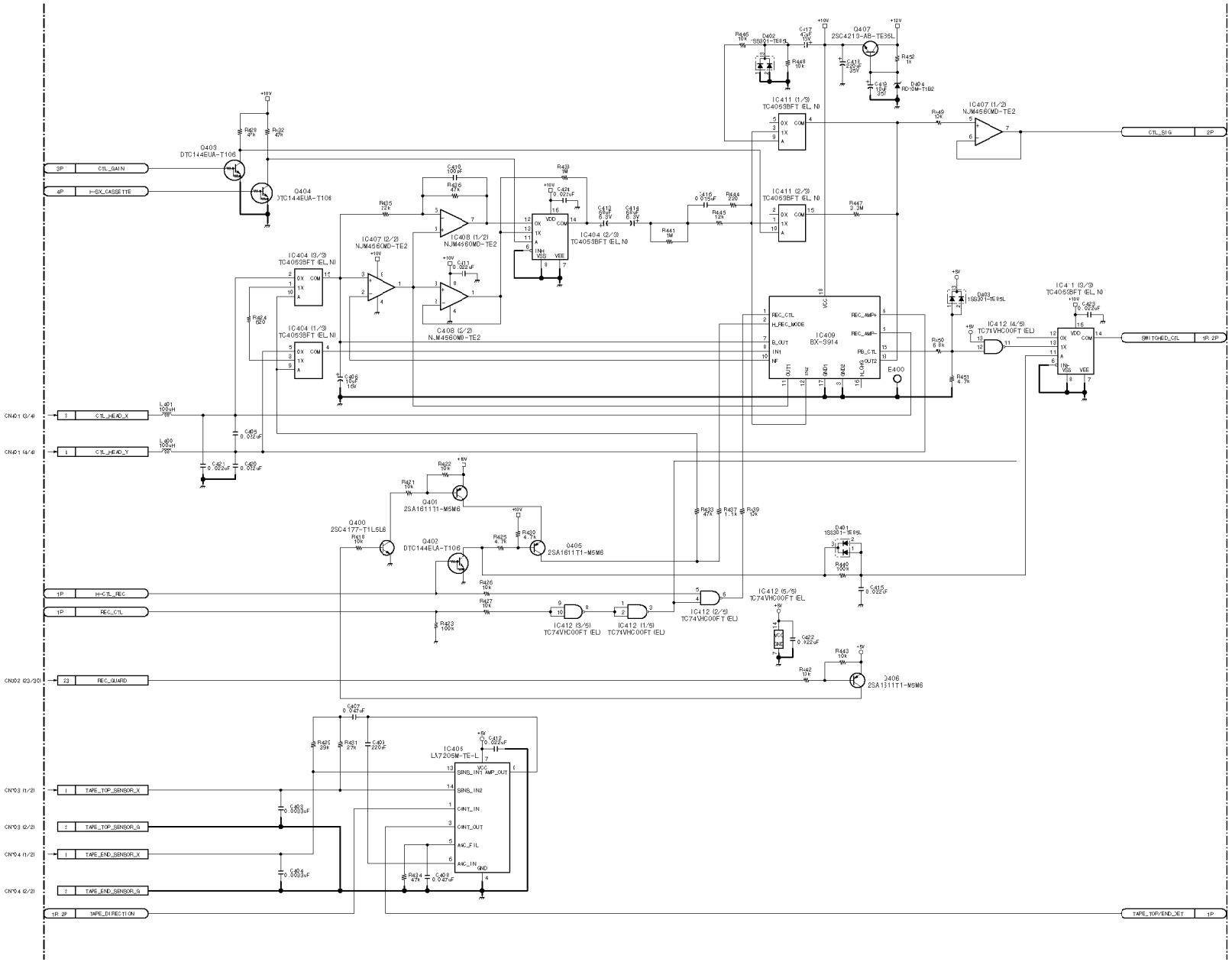

Servo contro, Motor driver, Sensors

SV-194A (4/7)

BOARD NO. 1-667-487-17

LOT NO. 905-

DNW-A220_SV-194_003

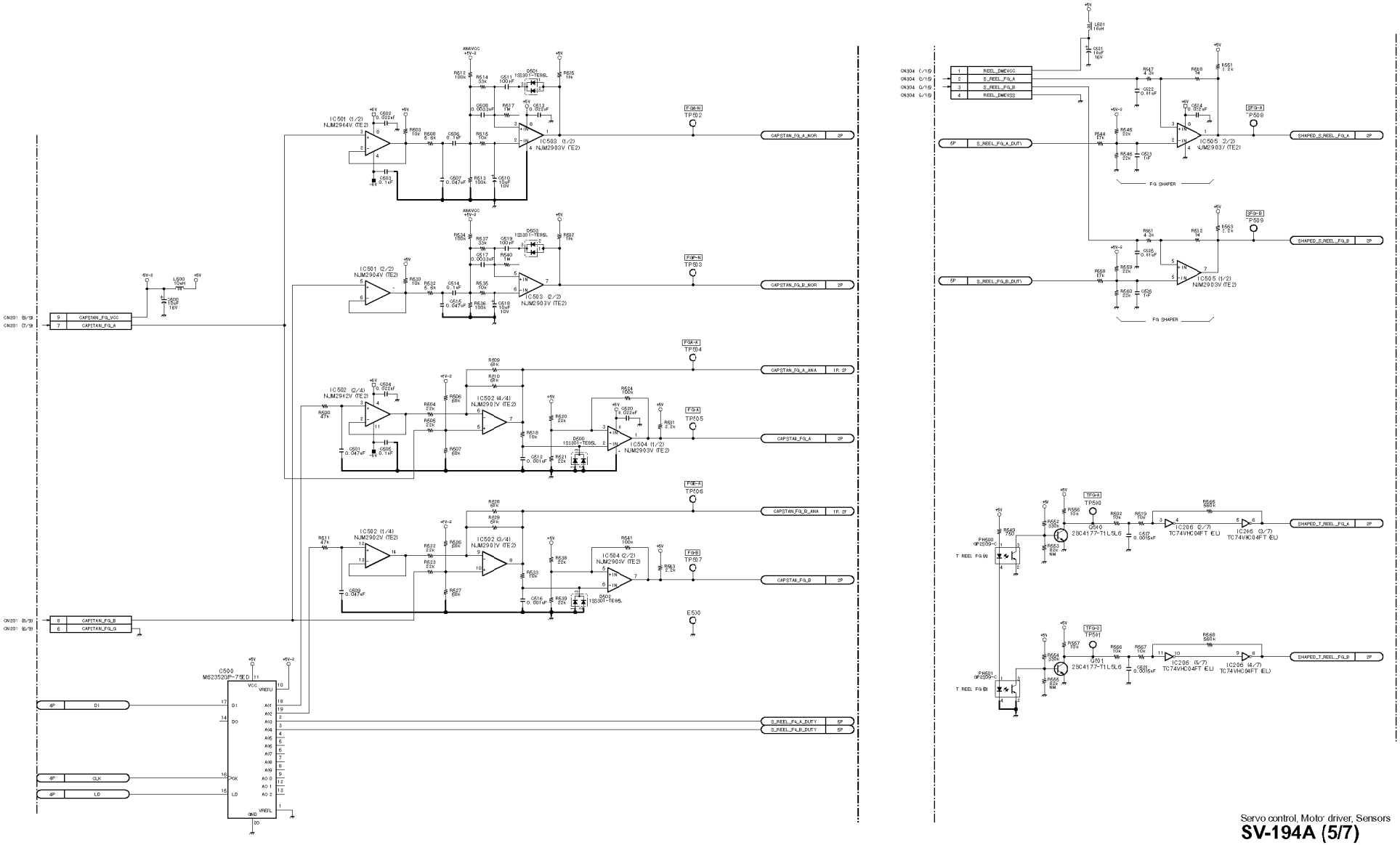

Servo control, Moto: driver, Sensors

SV-194A (5/7)

BOARD NO. 1-667-487-17

LOT NO. 905-

DNW-A22II_SV-194_003

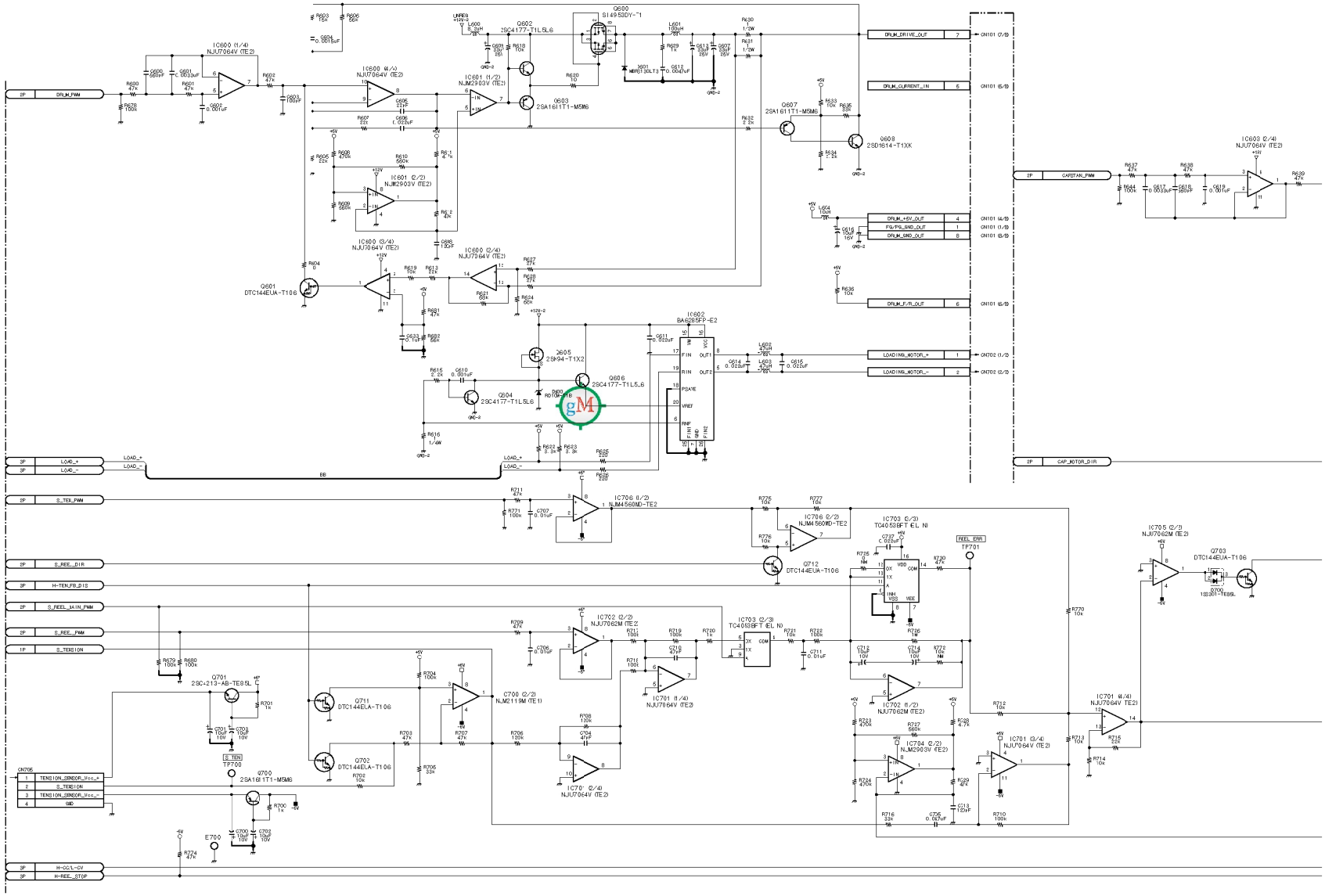

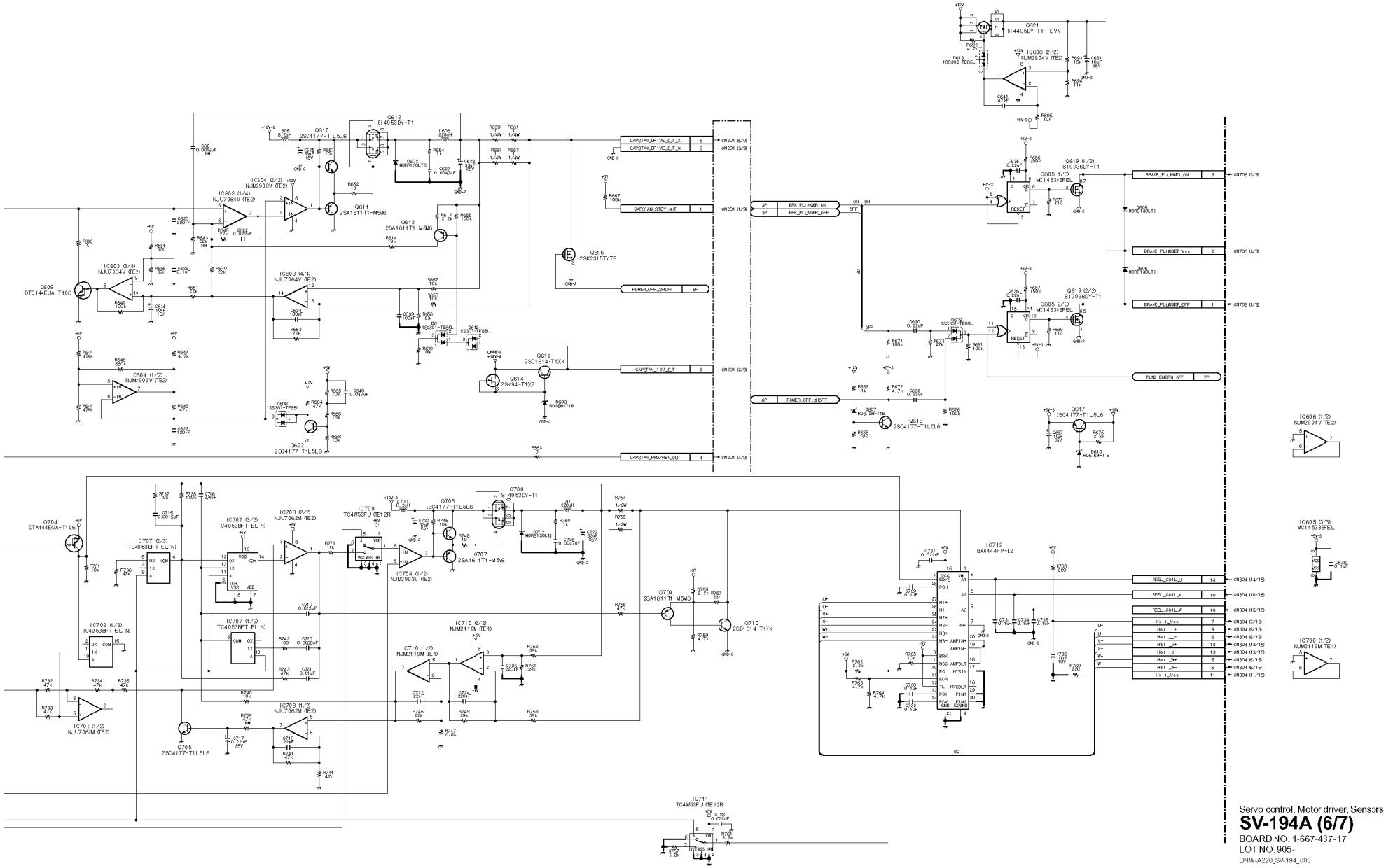

Servo control, Motor driver, Sensors

SV-194A (6/7)

BOARD NO. 1-667-437-17

LOT NO. 905-

DNW-A220_SV-194_003

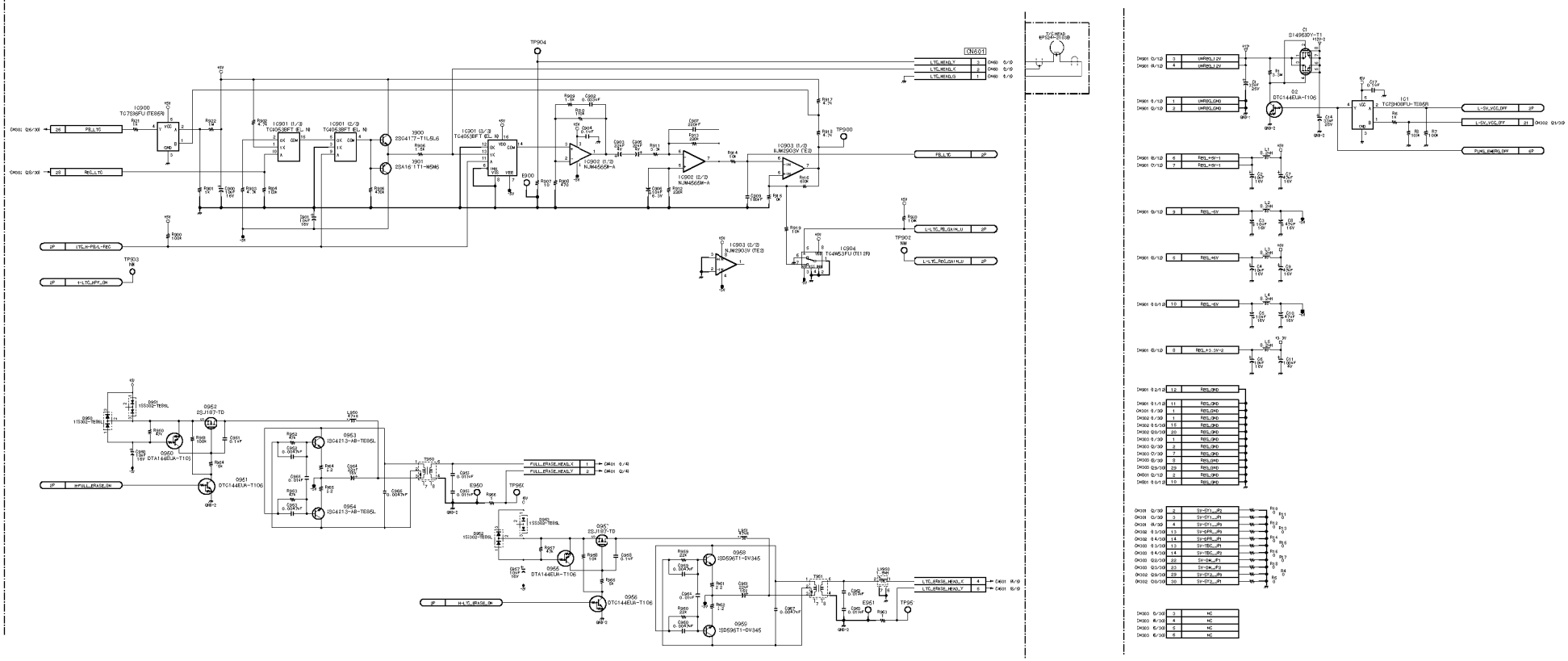

Servo control, Motor driver, Sensors

SV-194A (7/7)

BOARD NO. 1-667-487-17

LOT NO. 905-

DNW-A220_SV-194_003

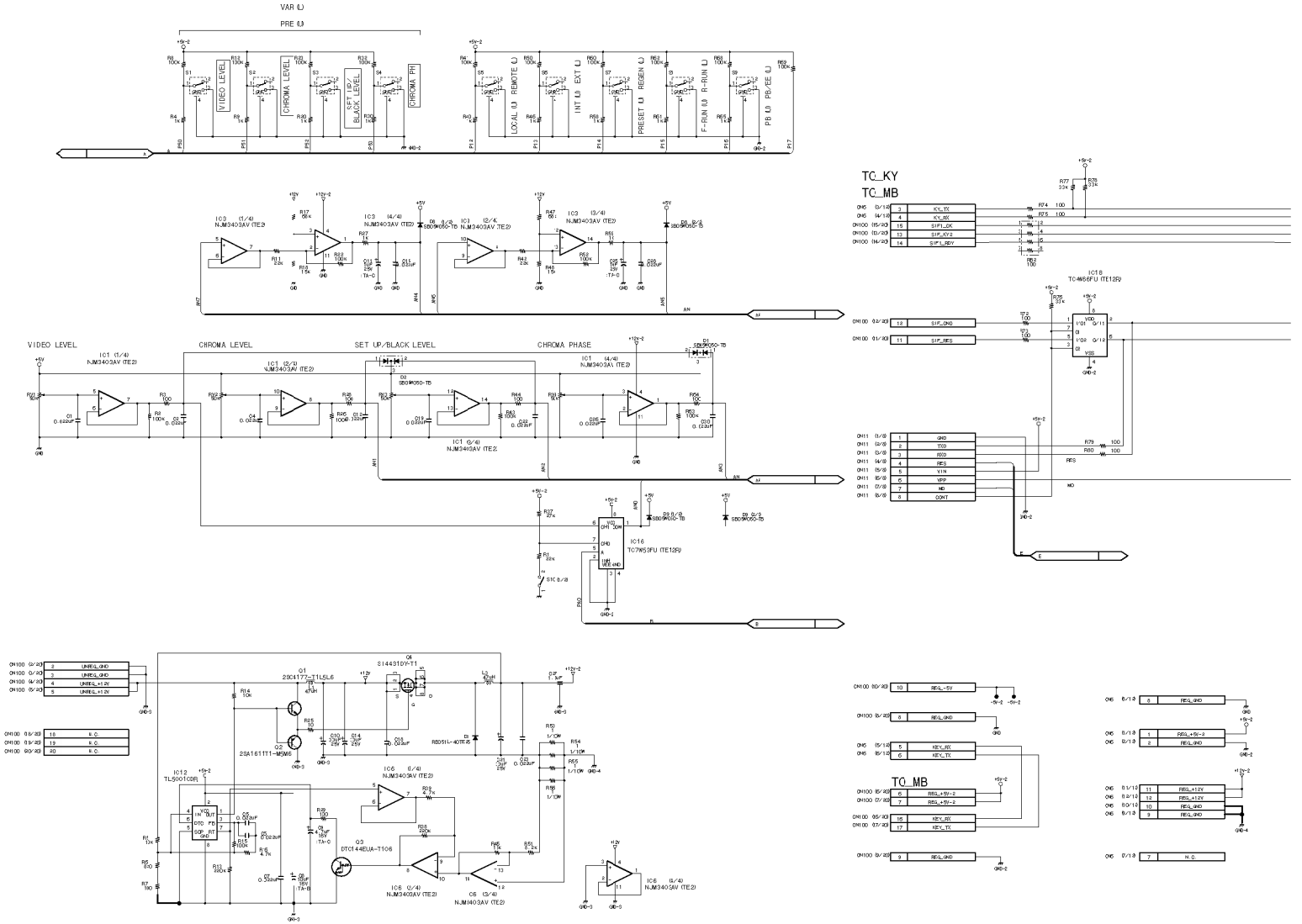
VAR (L)
PRE (L)
VIDEO LEVEL
CHROMA LEVEL
SET UP/BLACK LEVEL
CHROMA PHASE
LOCAL (L) REMOTE (L)
INT (L) EXT (L)
PRESET (L) REGEN (L)
F-RUN (L) R-RUN (L)
PB (L) PB/CEE (L)
TC_KY
TC_MB
TC_MB
IC1 (1/4) NJM3403AV (TE2)
IC1 (2/4) NJM3403AV (TE2)
IC1 (3/4) NJM3403AV (TE2)
IC1 (4/4) NJM3403AV (TE2)
IC16 TC7W53FU (TE12R)
IC18 TC4W66FU (TE12R)
IC12 TL5001CDR
IC6 (1/4) NJM3403AV (TE2)
IC6 (2/4) NJM3403AV (TE2)
IC6 (3/4) NJM3403AV (TE2)
IC6 (4/4) NJM3403AV (TE2)
Q1 2SC4177-T1L5L6
Q2 2SA1611T1-MSM6
Q3 DTC144EUA-T106
Q4 SI4431DY-T1
D1 RB051L-40TE25
D2 SB09M050-TB
D3 SB09M050-TB
D4 SB09M050-TB
D5 SB09M050-TB
D6 SB09M050-TB
D7 SB09M050-TB
D8 SB09M050-TB
D9 SB09M050-TB
SIC 8/8
SIF_KY_CK
SIF_KY_D
SIF_KY_RDY
SIF_GND
SIF_RES
KEY_RX
KEY_TX
REG_+5V-2
REG_GND
REG_+12V
REG_+5V-3
N.C.
UNREG_GND
UNREG_+12V
UNREG_+5V

http://getMANUAL.com

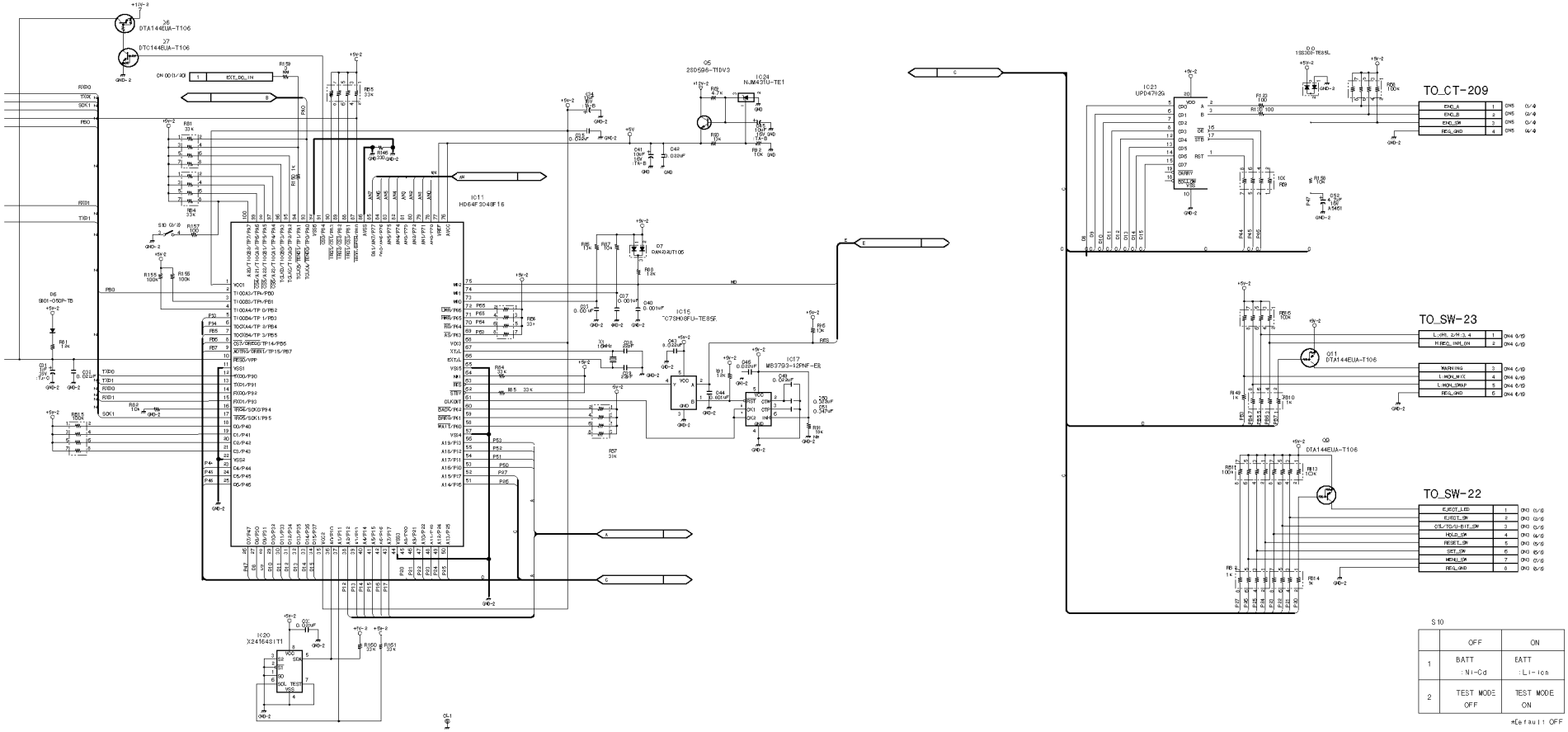

Lower control panel

SW-21

BOARD NO. 1-674-896-12

LOT NO. 907-

DNW-A28_SW-21_012

DNW-A28

DNW-A28P

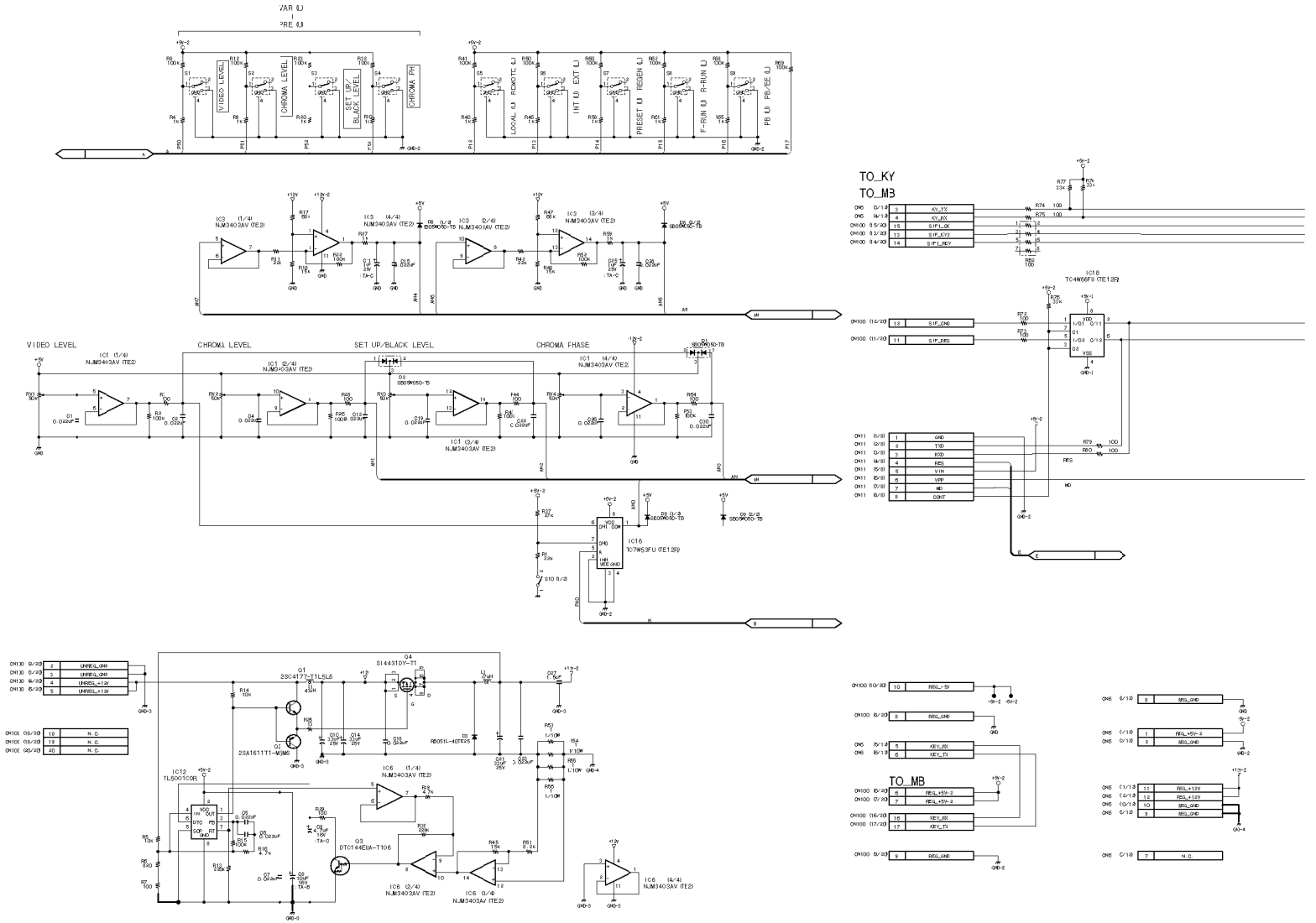
VIDEO LEVEL
CHROMA LEVEL
SET UP/BLACK LEVEL
CHROMA PHASE
TO_KY
TO_M3
TO_MB

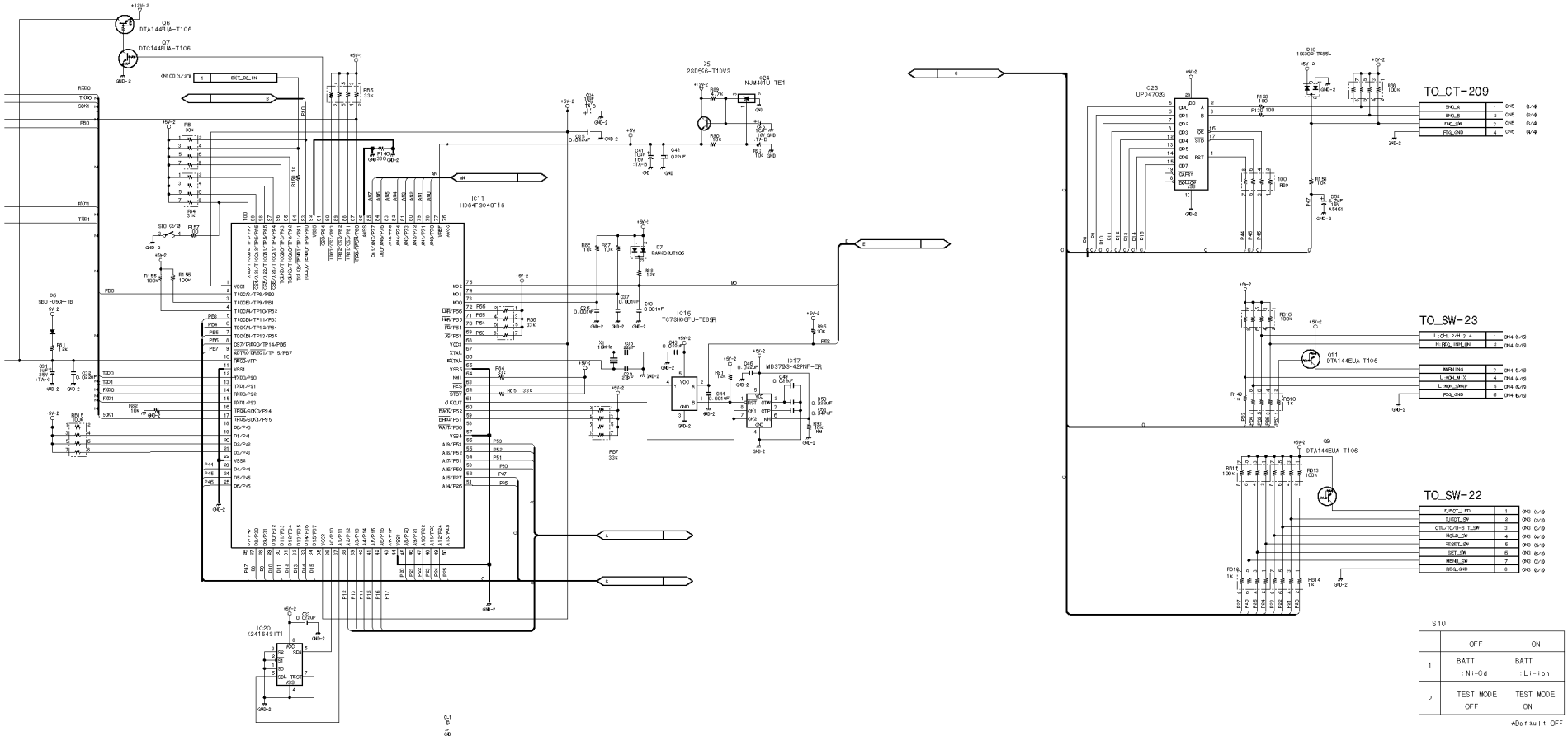

S10

	OFF	ON
1	BATT : Ni-Cd	BATT : Li-ion
2	TEST MODE OFF	TEST MODE ON

*Default OFF

Lower control panel

SW-21

BOARD NO. 1-674-896-11

LOT NO. 905-

DNW-A28_SW-21_011

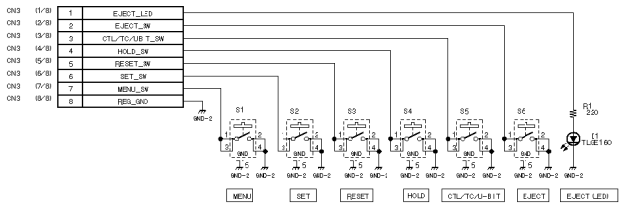

Control panel (EJECT, CTL/TC/U-BIT, HOLD, RESET, SET, MENU)

SW-22

BOARD NO. 1-675-102-11
LOT NO. 905-
DNW-A28_SW-22_011

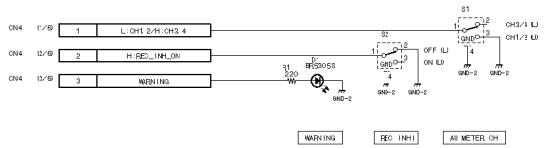

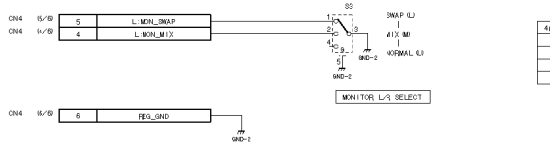

4pin	5pin	MONITOR L/R SELECT
1	1	NORMAL
◇	1	MIX
1	◇	SWAP
◇	◇	——

Control panel (WARNING Indi., REC INHI, METER, MONITOR)

SW-23

BOARD NO. 1-675-103-12
LOT NO. 905-
DNW-A28_SW-23_011

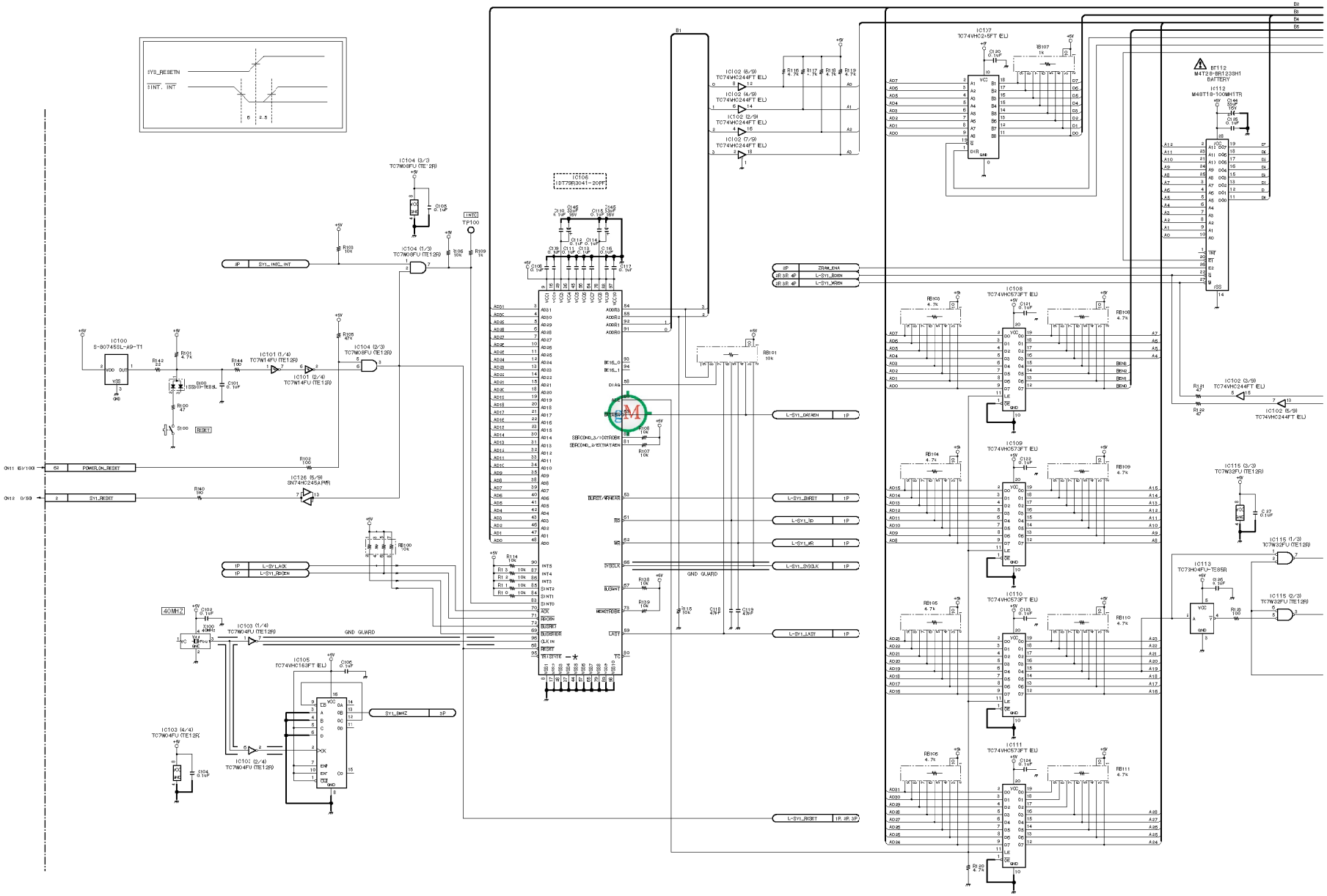

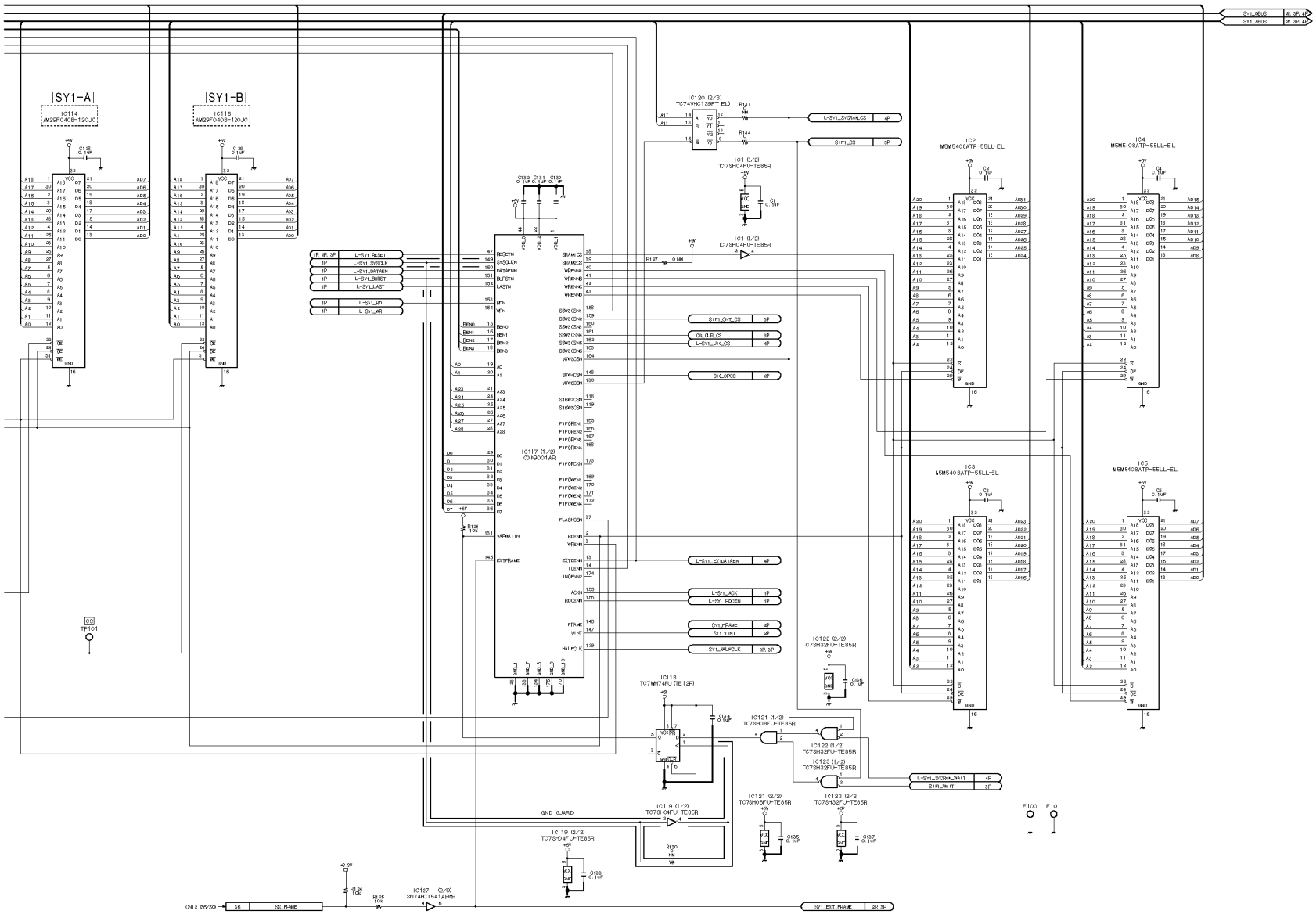

System control (SYS1)

SY-259B (1/4)

BOARD NO. 1-667-488-14

LOT NO. 995-

DNW-A220_SY-259_014

DNW-A28

DNW-A28P

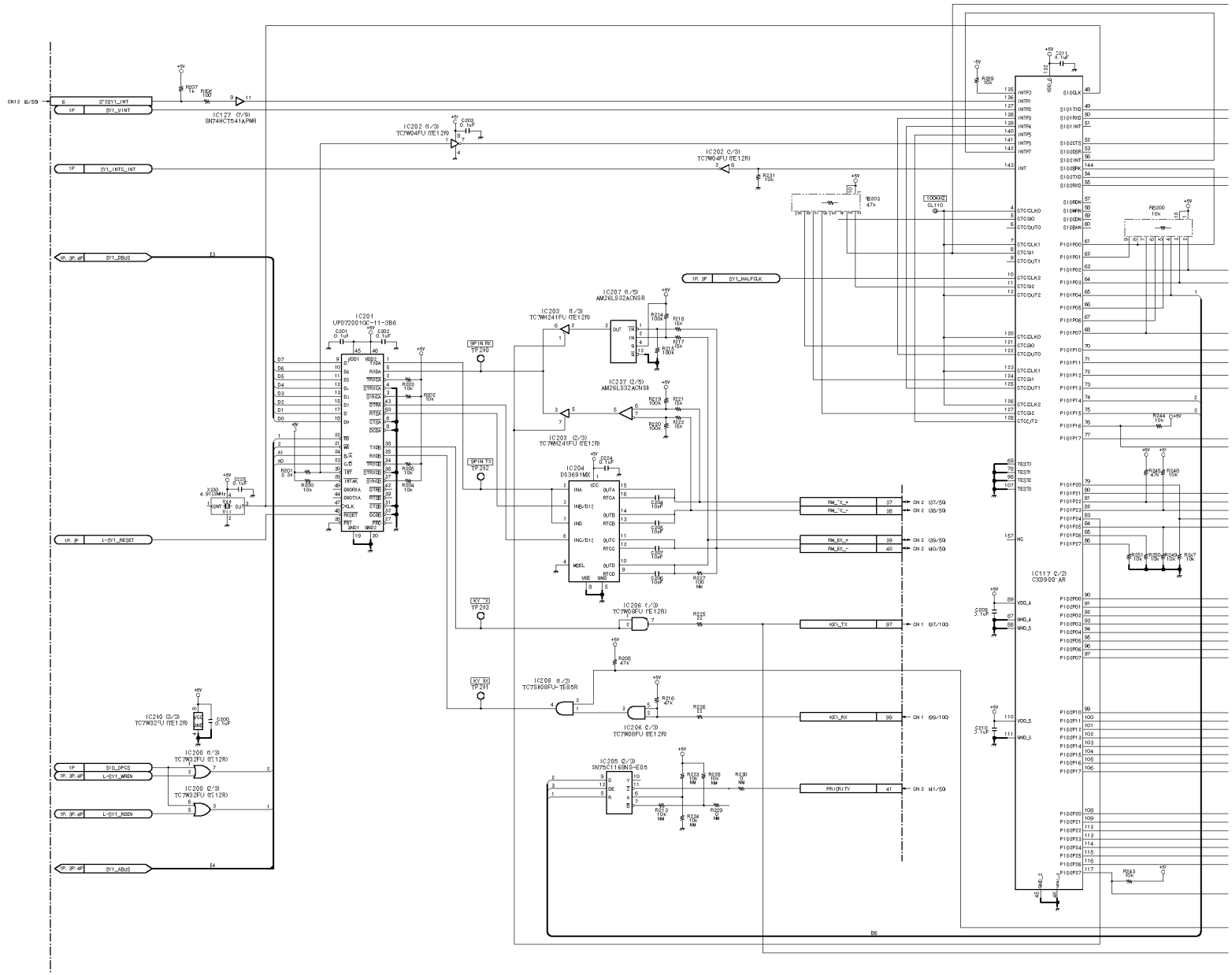

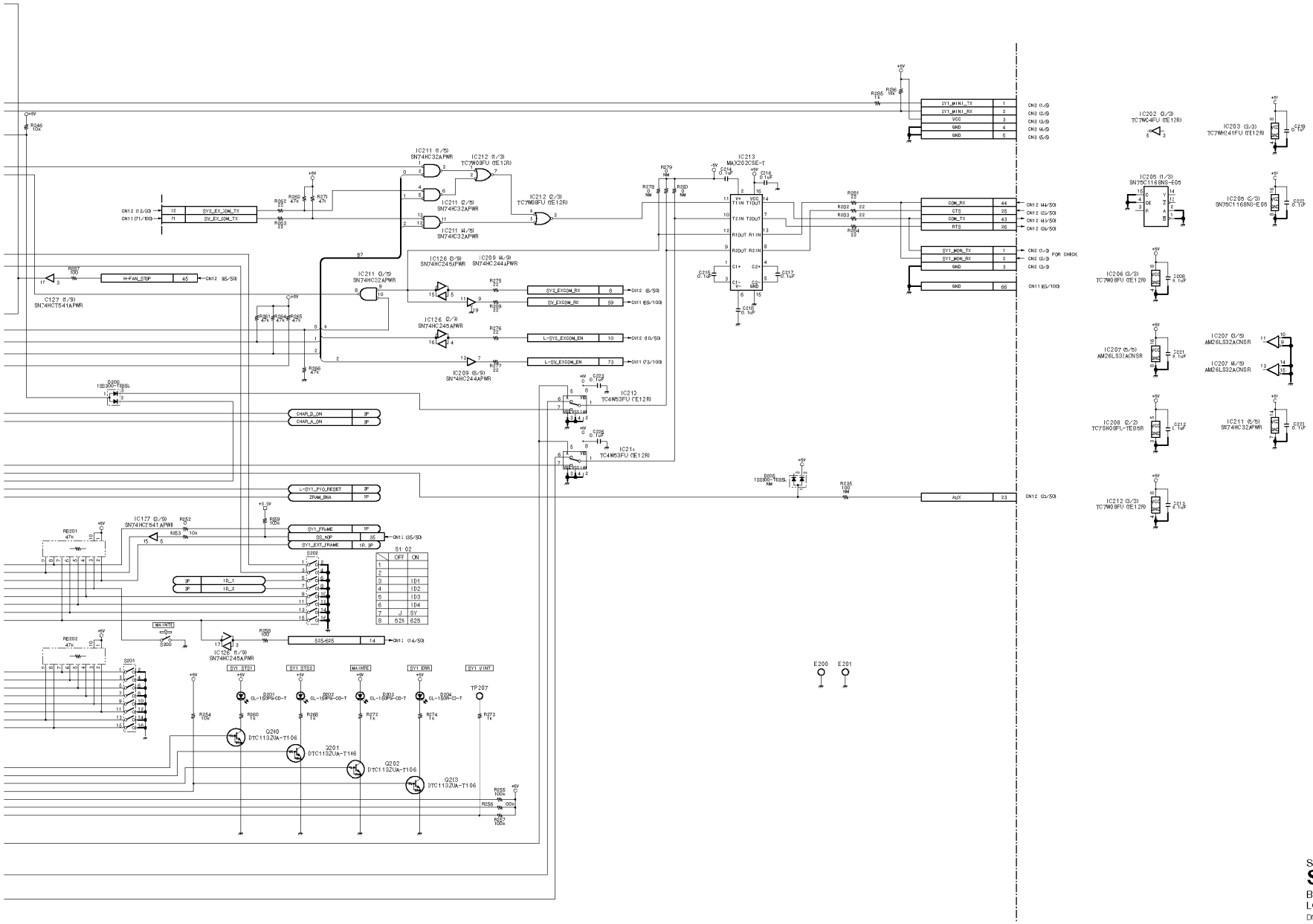

System control (SYS1)
SY-259B (2/4)
BOARD NO. 1-667-488-14
LOT NO. 995-
DNW-A220_SY-259_014

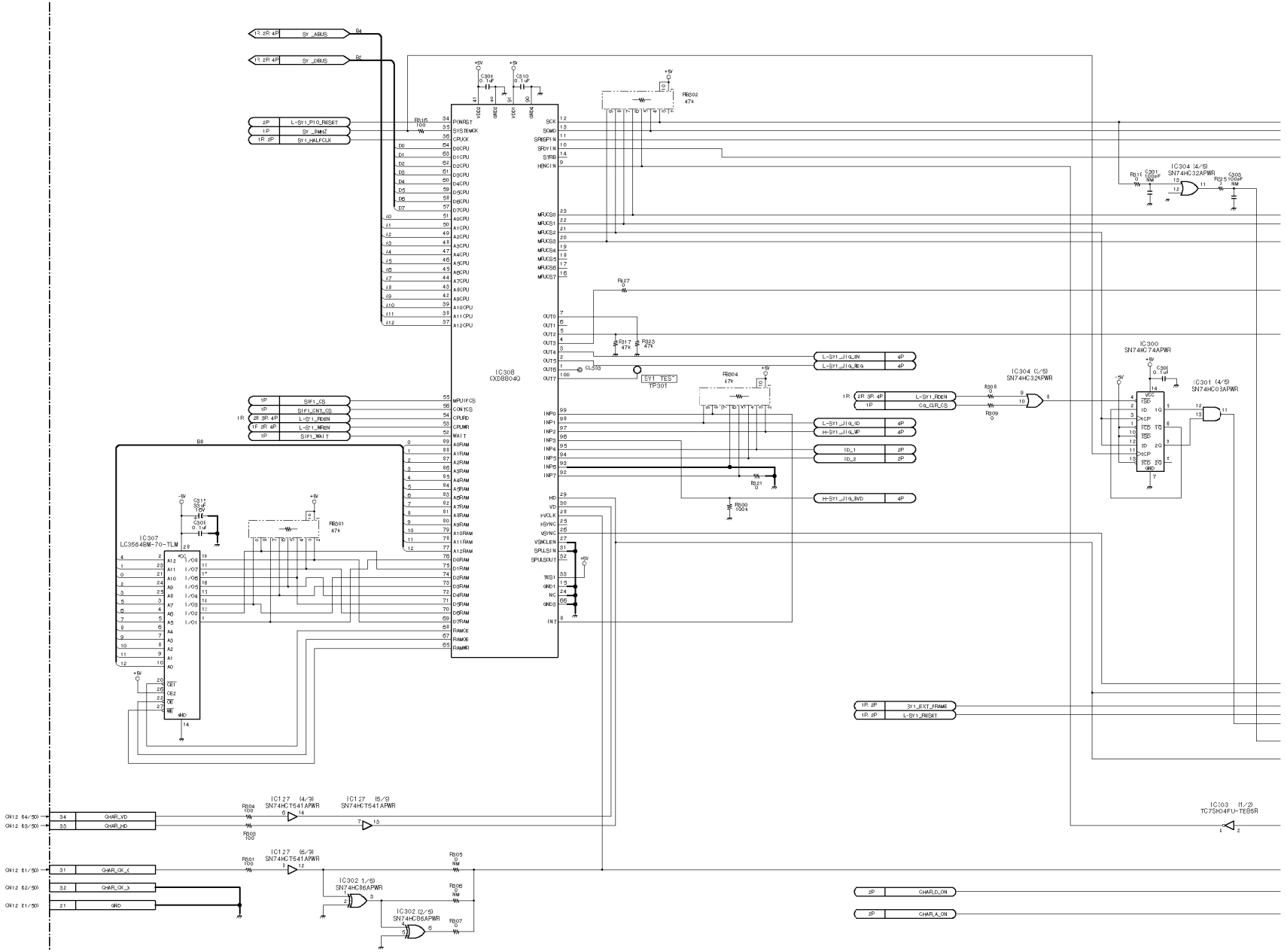

http://getMANUAL.com

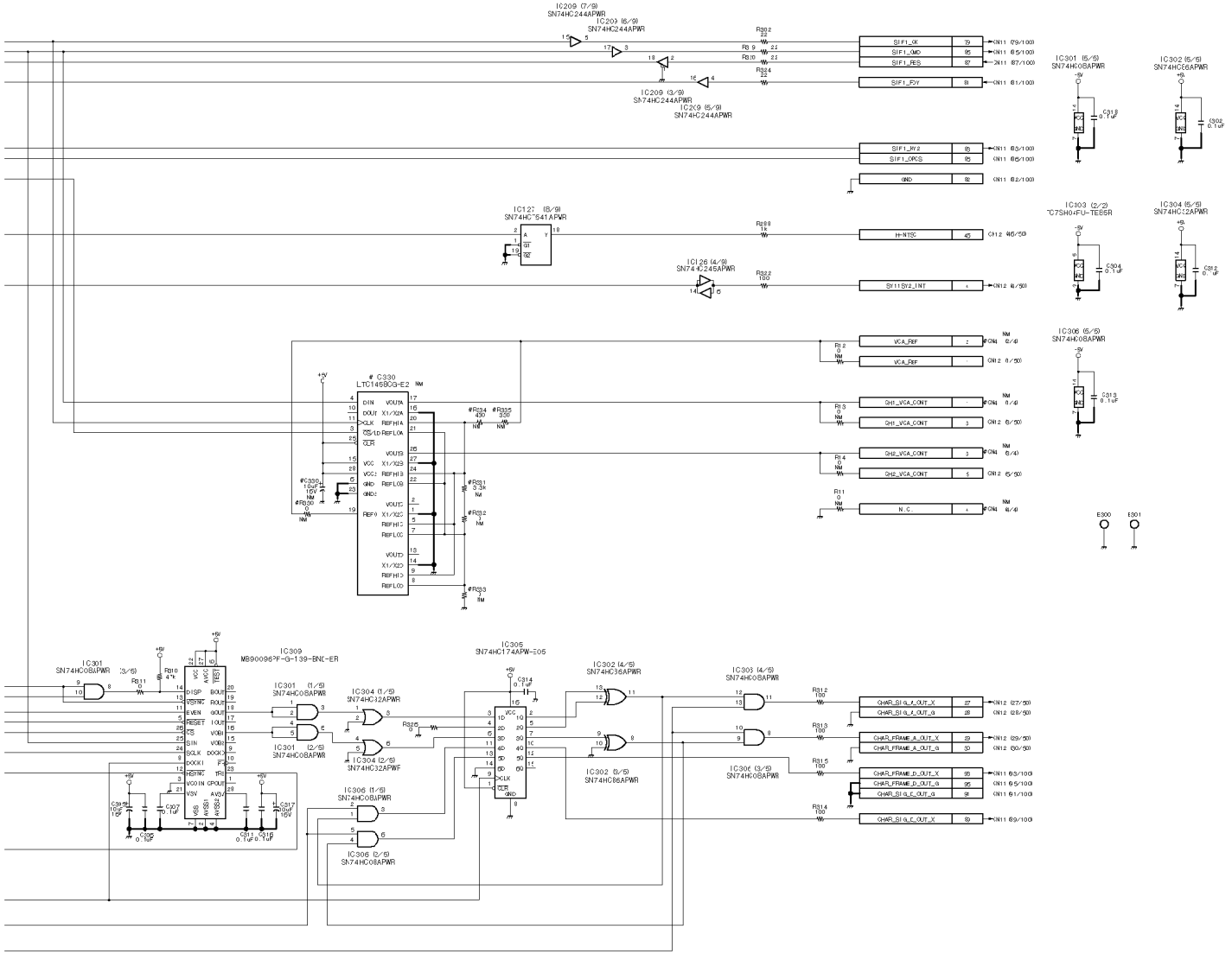

System contrd (SYS1)

SY-259B (3/4)

BOARD NO. 1-667-489-14

LOT NO. 905-

DNW-A220_SY-259_014

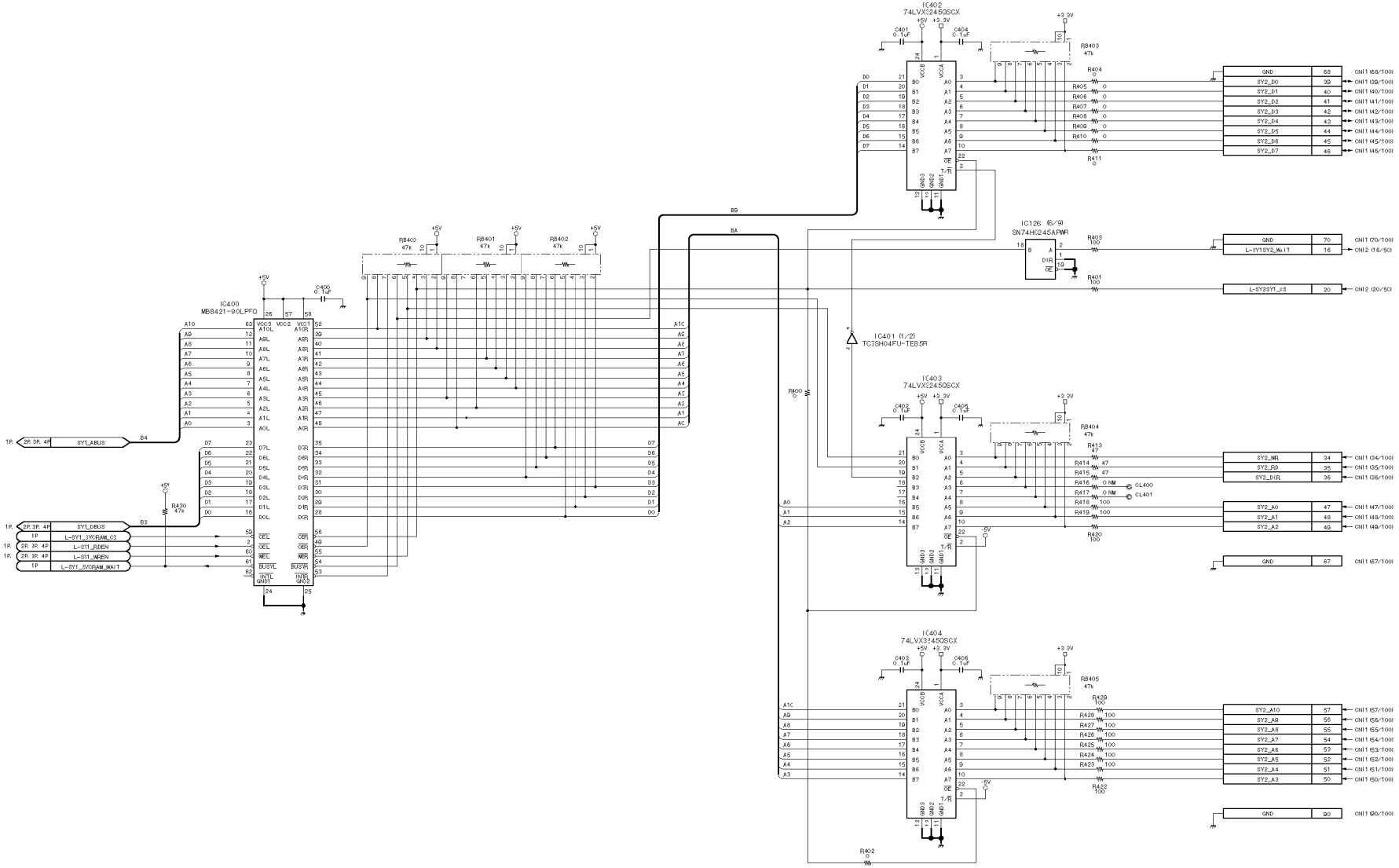
IC402
74LVXC2450SCX
IC403
74LVXC2450SCX
IC404
74LVX3245QSCX
IC400
MB8421-90LPFQ
IC401 (1/2)
TC7SH04FU-TE85R
IC126 (6/9)
SN74HC245APWR
RB400 47k
RB401 47k
RB402 47k
RB403 47k
RB404 47k
RB405 47k
C400 0.1uF
C401 0.1uF
C403 0.1uF
C404 0.1uF
C405 0.1uF
C406 0.1uF
R400 0
R401 100
R402 0
R403 100
R404 0
R405 0
R406 0
R407 0
R408 0
R409 0
R410 0
R411 0
R412 47
R413 47
R414 47
R415 47
R416 0 NM
R417 0 NM
R418 100
R419 100
R420 100
R422 100
R423 100
R424 100
R425 100
R426 100
R427 100
R428 100
R429 100
R430 47k
CL400
CL401
SY1_ABUS
SY1_DBUS
L-SY1_SYCRAM_CS
L-SY1_RDEN
L-SY1_WREN
L-SY1_SYCRAM_WAIT
L-SY1SY2_WAIT
L-SY2SY1_ES
SY2_D0
SY2_D1
SY2_D2
SY2_D3
SY2_D4
SY2_D5
SY2_D6
SY2_D7
SY2_WR
SY2_RD
SY2_DIR
SY2_A0
SY2_A1
SY2_A2
SY2_A3
SY2_A4
SY2_A5
SY2_A6
SY2_A7
SY2_A8
SY2_A9
SY2_A10
GND
+5V
+3.3V
-5V

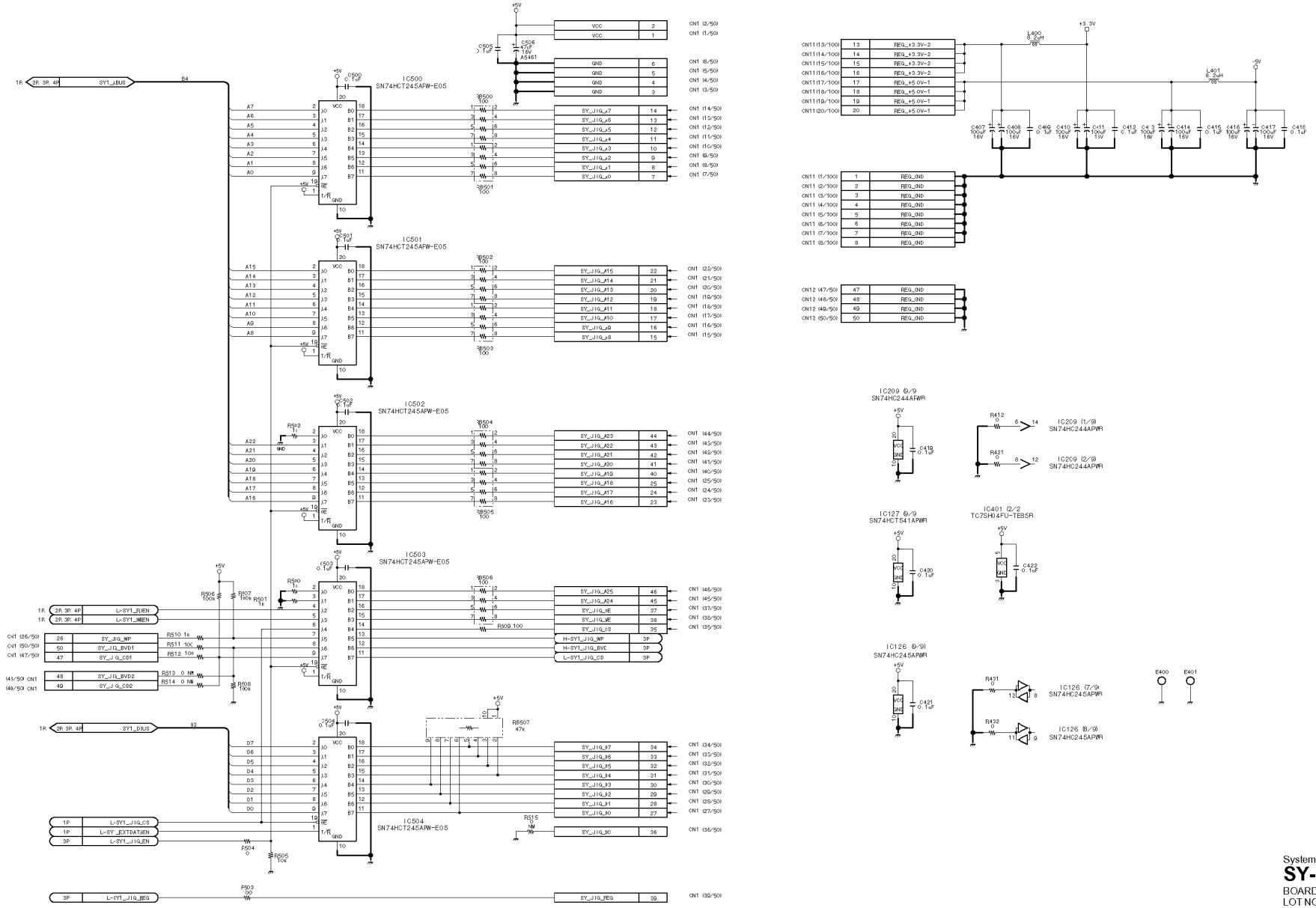

System control (SYS1)

SY-259B (4/4)

BOARD NO. 1-667-488-14

LOT NO. 995-

DNW-A220_SY-259_014

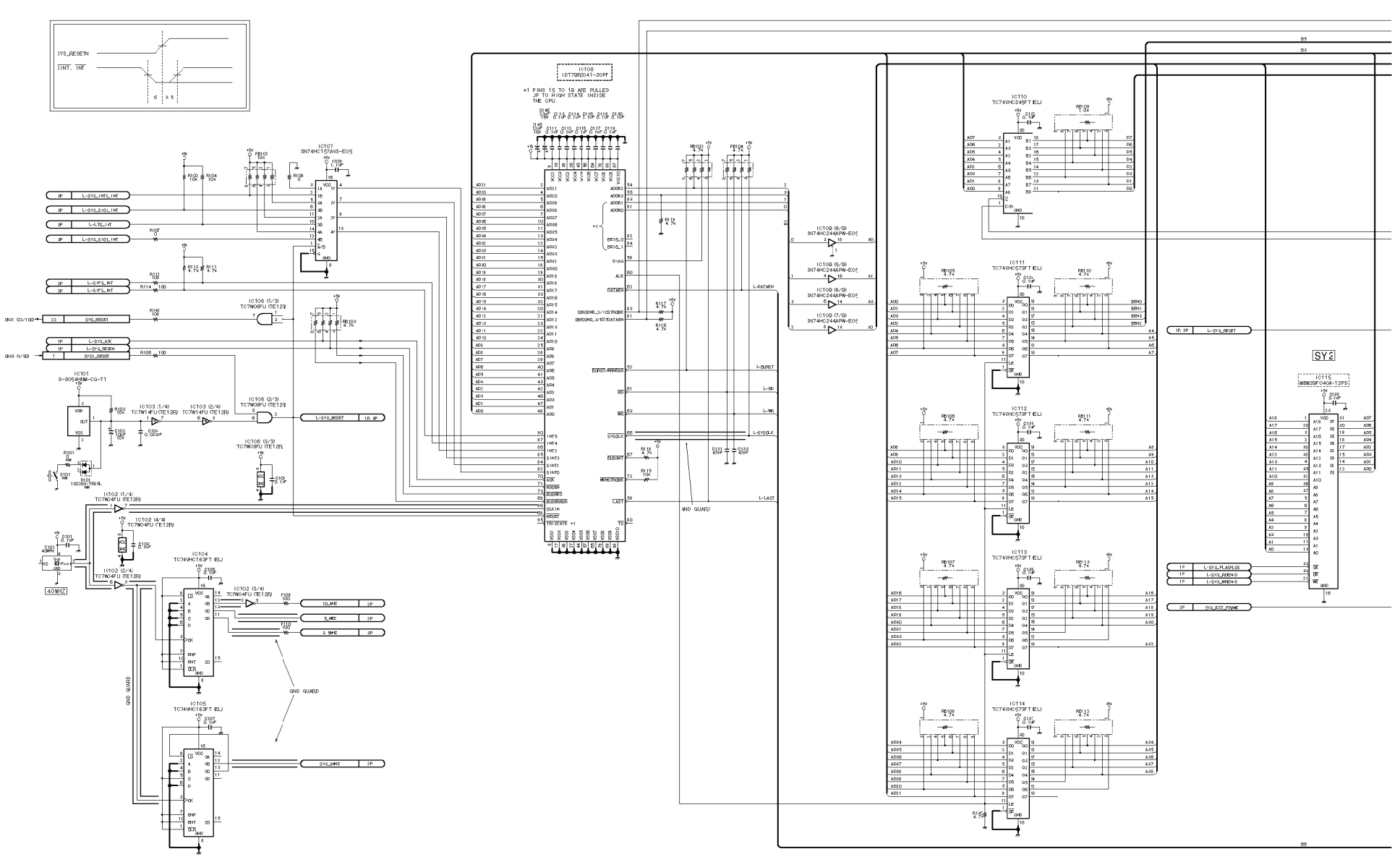
IC108
IDT79R2041-20PF
*1 PINS 15 TO 19 ARE PULLED UP TO HIGH STATE INSIDE THE CPU.
IC107
SN74HC157ANS-E05
IC101
S-80540NM-CQ-T1
IC102 (1/4) TC7W04FU (TE12R)
IC102 (2/4) TC7W04FU (TE12R)
IC102 (3/4) TC7W04FU (TE12R)
IC102 (4/4) TC7W04FU (TE12R)
IC103 (1/4) TC7W14FU (TE12R)
IC103 (2/4) TC7W14FU (TE12R)
IC106 (1/3) TC7W08FU (TE12R)
IC106 (2/3) TC7W08FU (TE12R)
IC106 (3/3) TC7W08FU (TE12R)
IC104 TC74VHC163FT (EL)
IC105 TC74VHC163FT (EL)
IC109 (5/Q) 3N74HC244APW-E05
IC109 (6/Q) 3N74HC244APW-E05
IC109 (7/Q) 3N74HC244APW-E05
IC110 TC74VHC245FT (EL)
IC111 TC74VHC573FT (EL)
IC112 TC74VHC573FT (EL)
IC113 TC74VHC573FT (EL)
IC114 TC74VHC573FT (EL)
IC115 M5M29F040A-12P5
SY2
40MHZ
GND GUARD
L-SY2_INTC_INT
L-SY2_S10_INT
L-TC_INT
L-SY2_S10_INT
L-SIF2_INT
L-SIF3_INT
SYS_RESET
L-SY2_AX
L-SY2_RDEN
SYS1_RESET
L-SY2_RESET
L-DATAEN
L-BURST
L-RD
L-WE
L-SYSCLK
L-LAST
L-SY2_FLASHCS
L-SY2_RDEN-D
L-SY2_WREN-D
SY2_EXT_FRAME
10_MHZ
5_MHZ
2_5MHZ
SY2_8MHZ

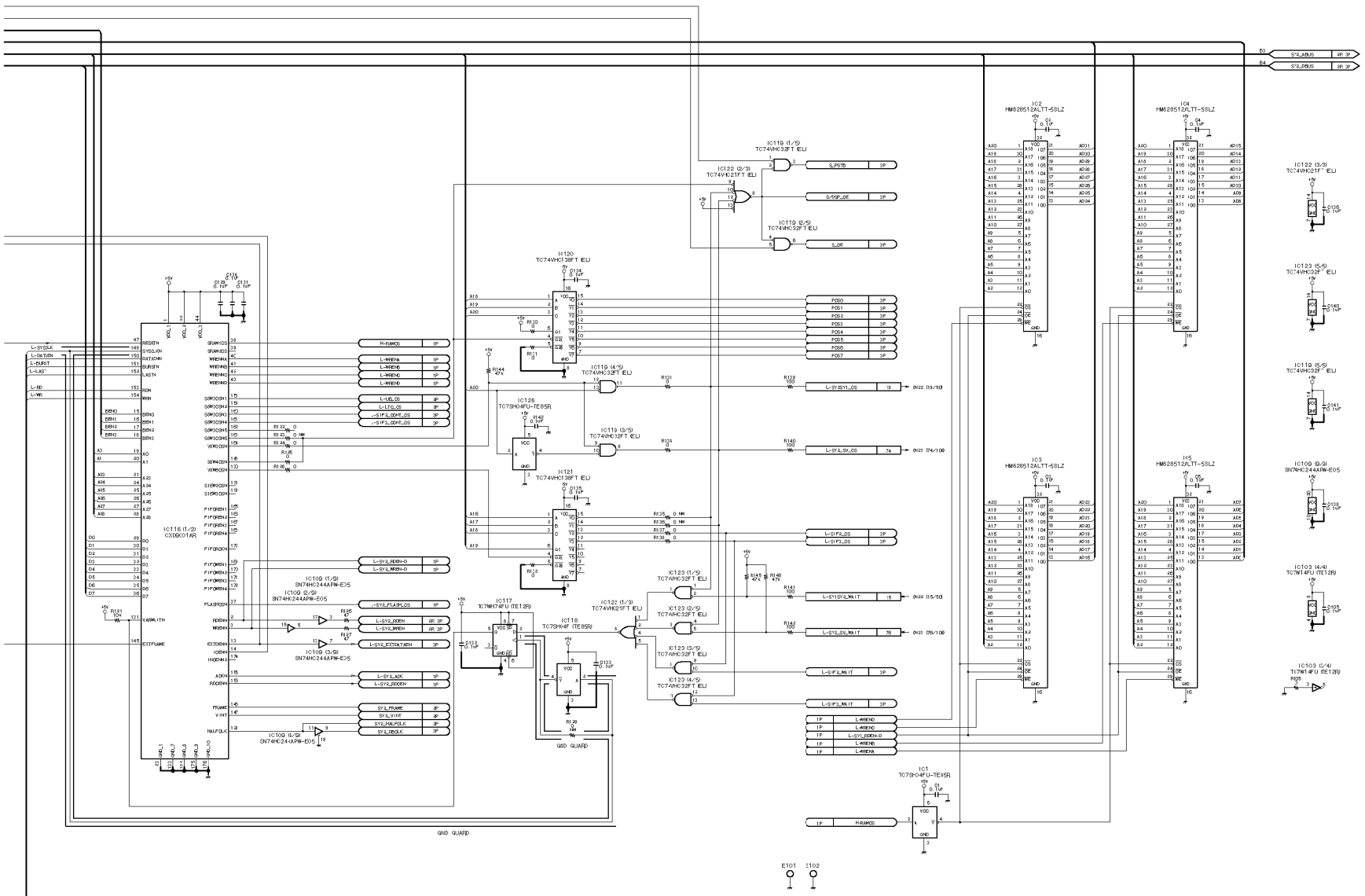

System control (SYS2)

SY-260 (1/3)

BOARD NO. 1-667-490-12

LOT NO. 995-

DNW-A220_SY260_001

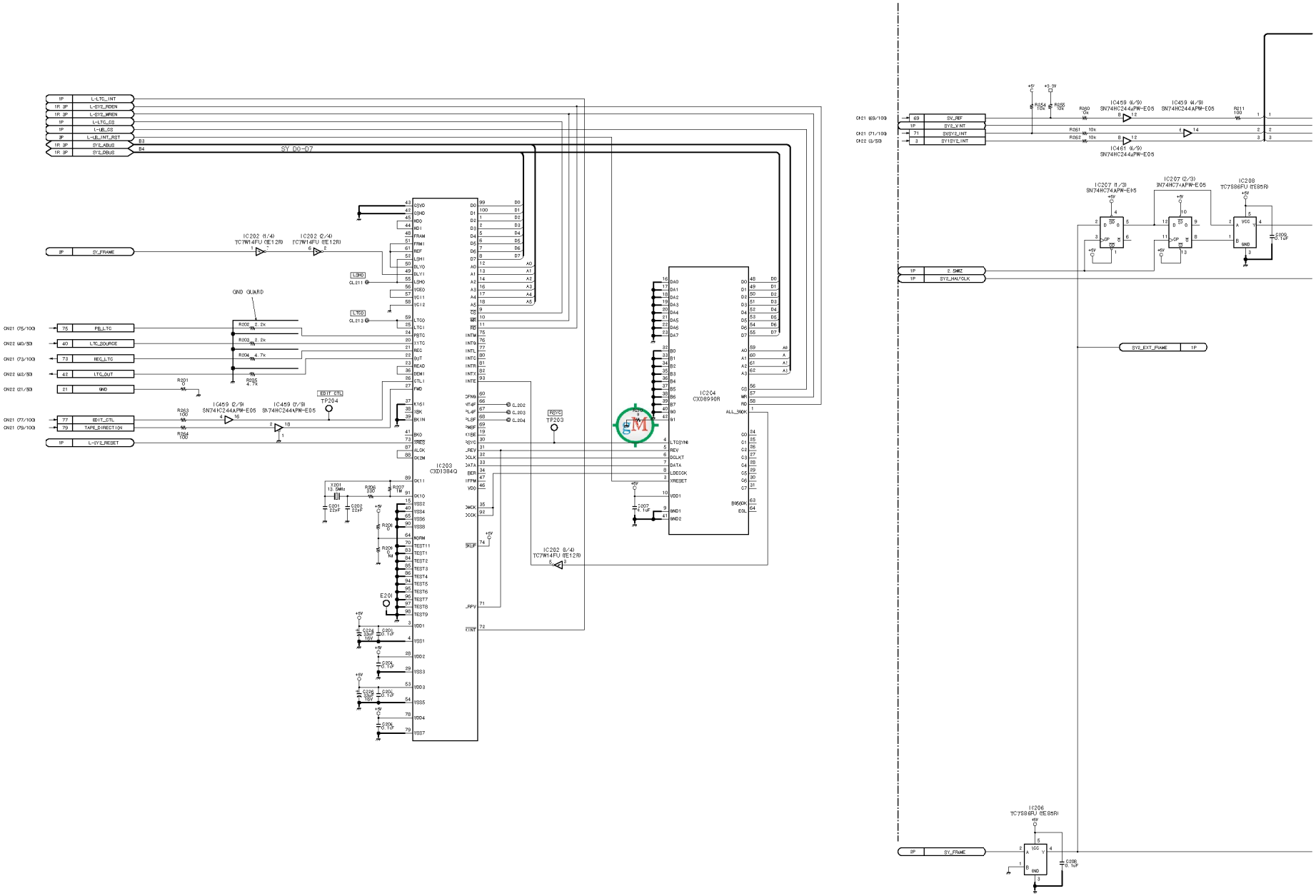

DNW-A28
DNW-A23P

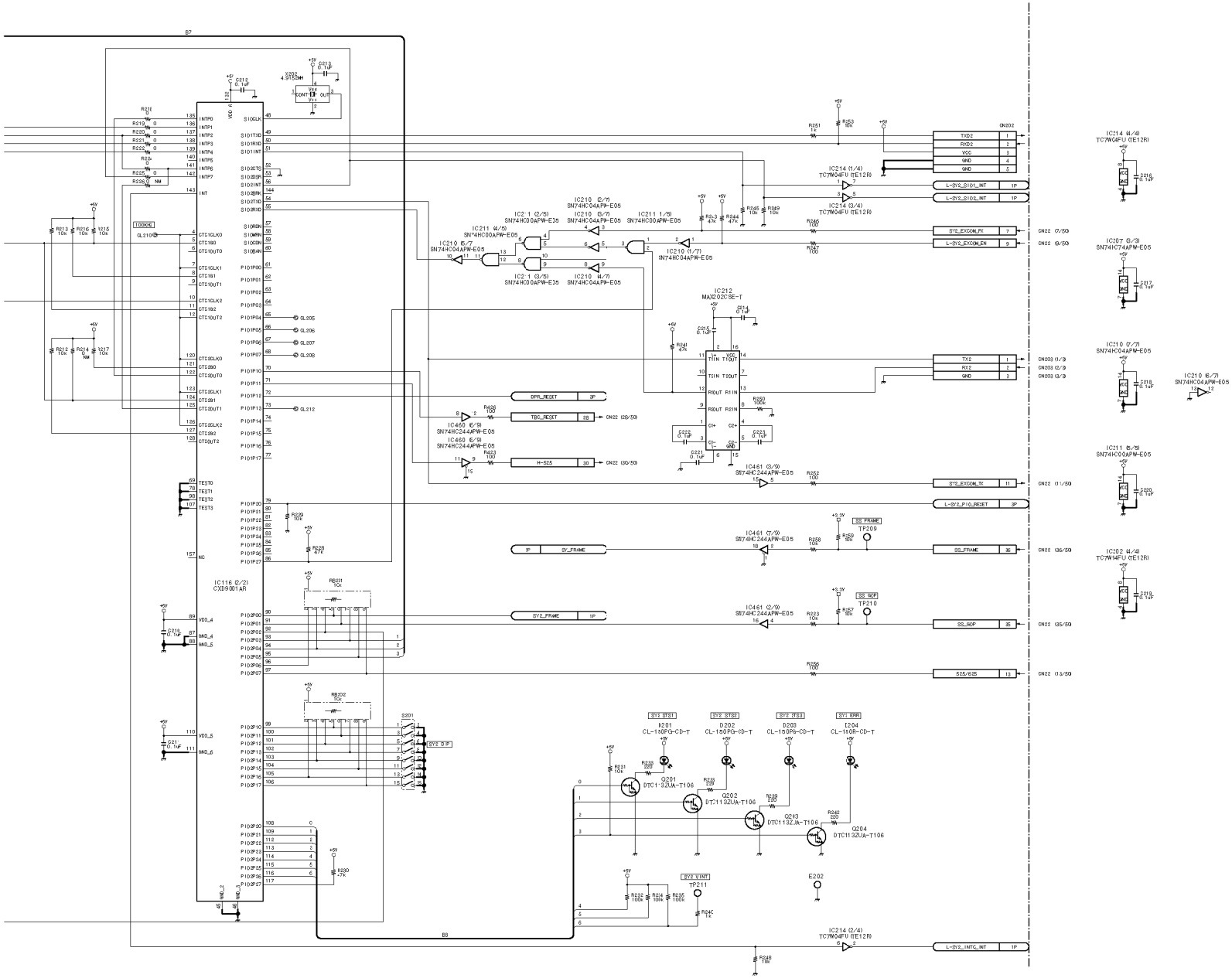

4-123

System control (SYS2)

SY-260 (2/3)

BOARD NO. 1-667-490-12

LOT NO. 995-

DNW-A220_SY-260_001

DNW-A28

DNW-A28P

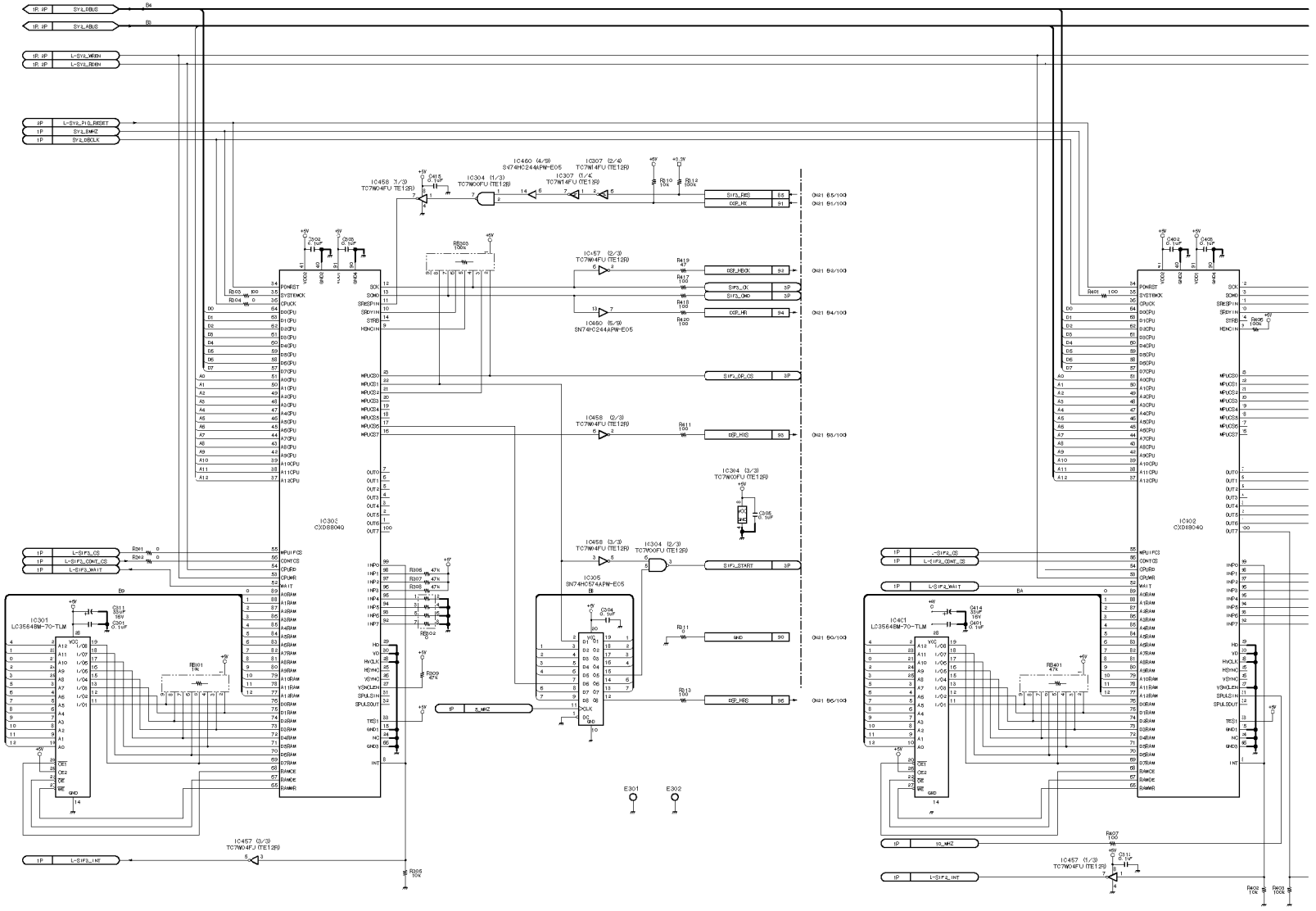

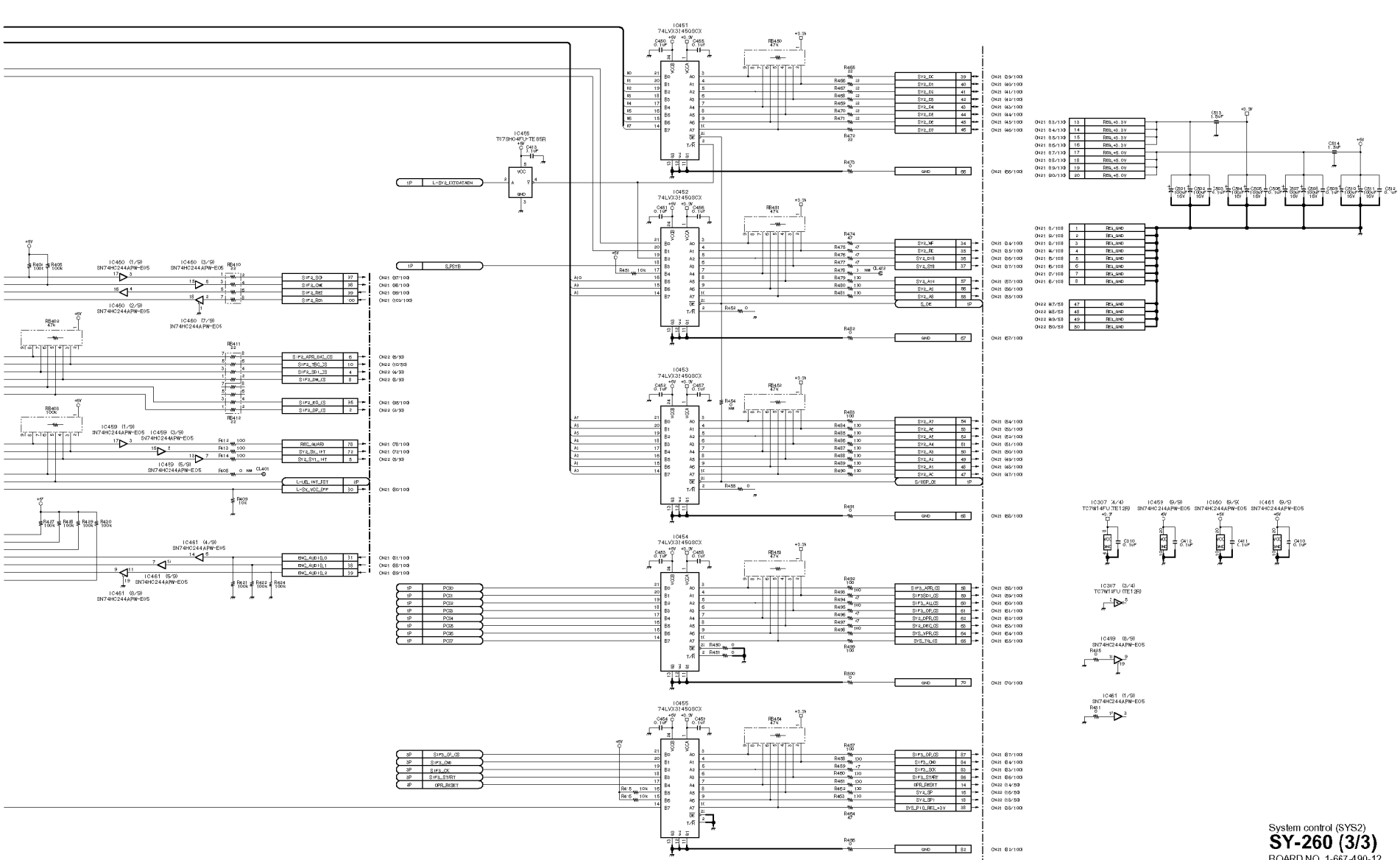

System control (SYS2)
SY-260 (3/3)
BOARD NO. 1-667-490-12
LOT NO. 905-
DNW-a220_SY-260_001

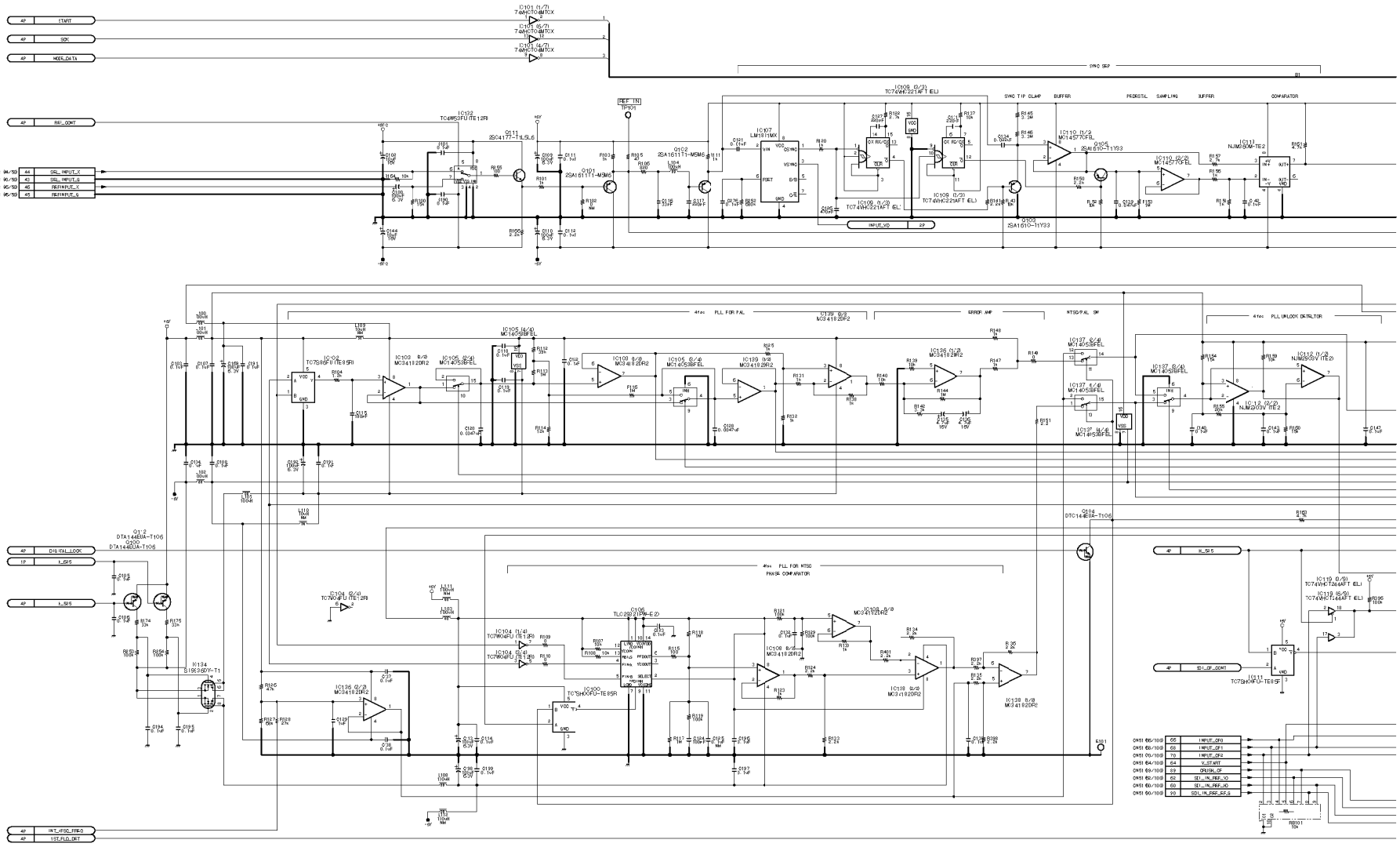

http://getMANUAL.com

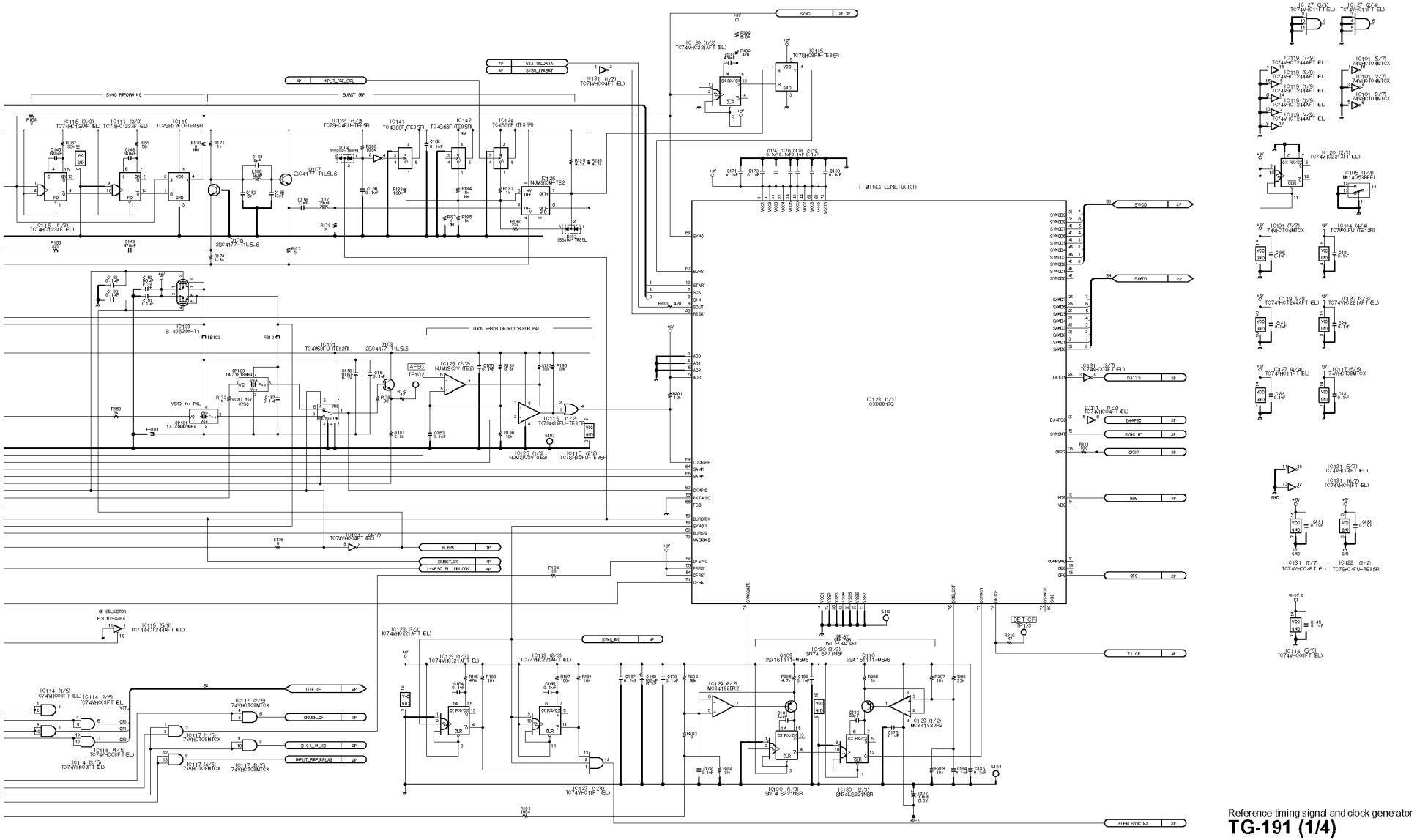

Reference timing signal and clock generator

TG-191 (1/4)

BOARD NO. 1-667-491-17
LOT NO. 905-

BVW-55_TG-191_017

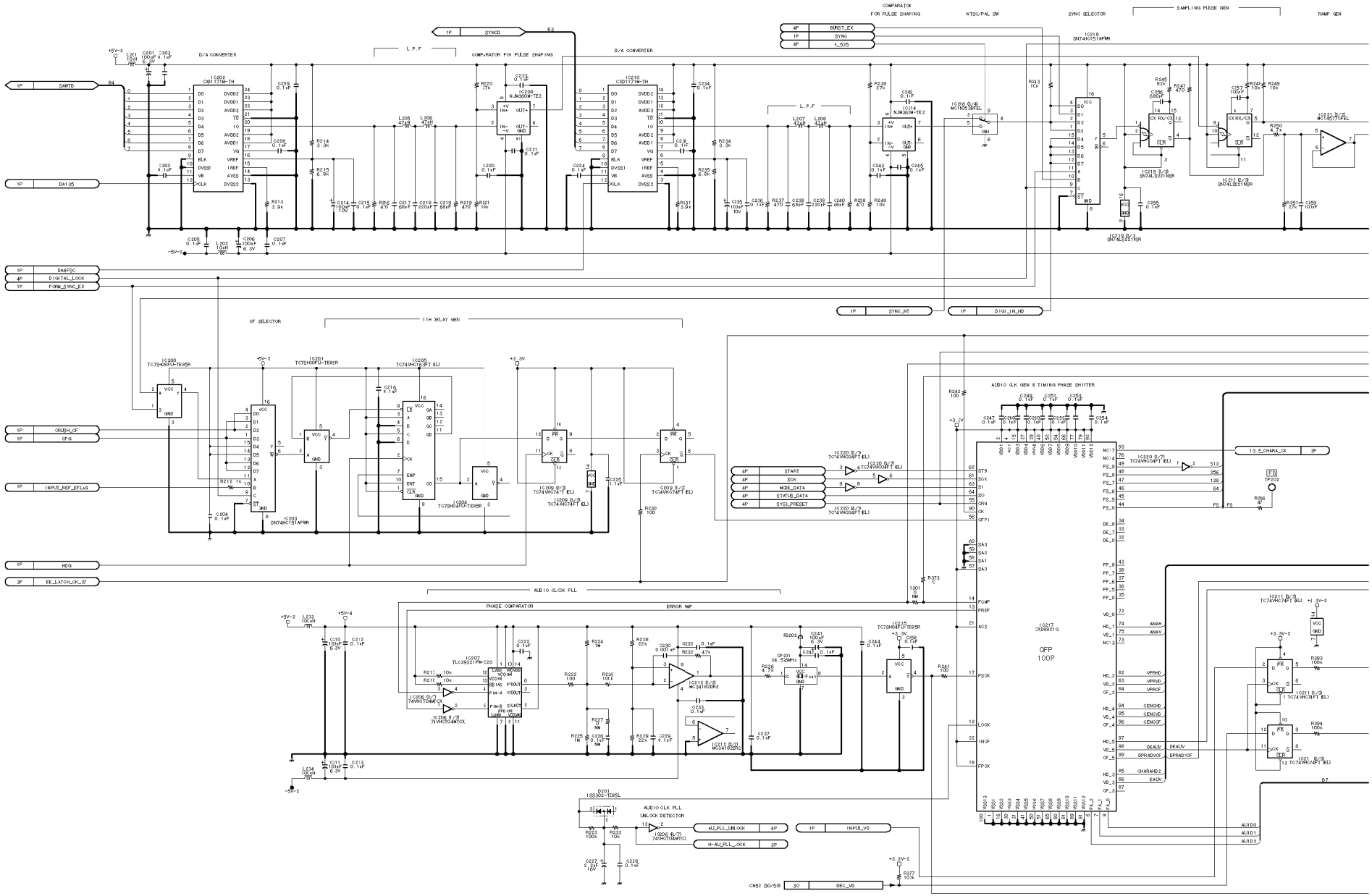
COMPARATOR FOR PULSE SHAPING
NTSC/PAL SW
SYNC SELECTOR
SAMPLING PULSE GEN
RAMP GEN
D/A CONVERTER
L.P.F
SYNCD
SAWTD
DA135
DA4FD0
DIGITAL_LOCK
FORM_SYNC_EX
BURST_EX
SYNC
4_525
SYNC_NT
DIGI_IN_HD
CF SELECTOR
1H DELAY GEN
CRUSH_CF
CFG
INPUT_REF_EFLVS
HDG
EE_LATCH_OK_07
START
SCK
MODE_DATA
STATUS_DATA
SYS3_PRESET
13_4_CHARA_OK
AUDIO CLK GEN & TIMING PHASE SHIFTER
AUDIO CLOCK PLL
PHASE COMPARATOR
ERROR AMP
AUDIO CLK PLL UNLOCK DETECTOR
AU_PLL_UNLOCK
H-AU_PLL_LOCK
INPUT_VD
DEC_VD
QFP 100P
AUDIO0
AUDIO1
AUDIO2

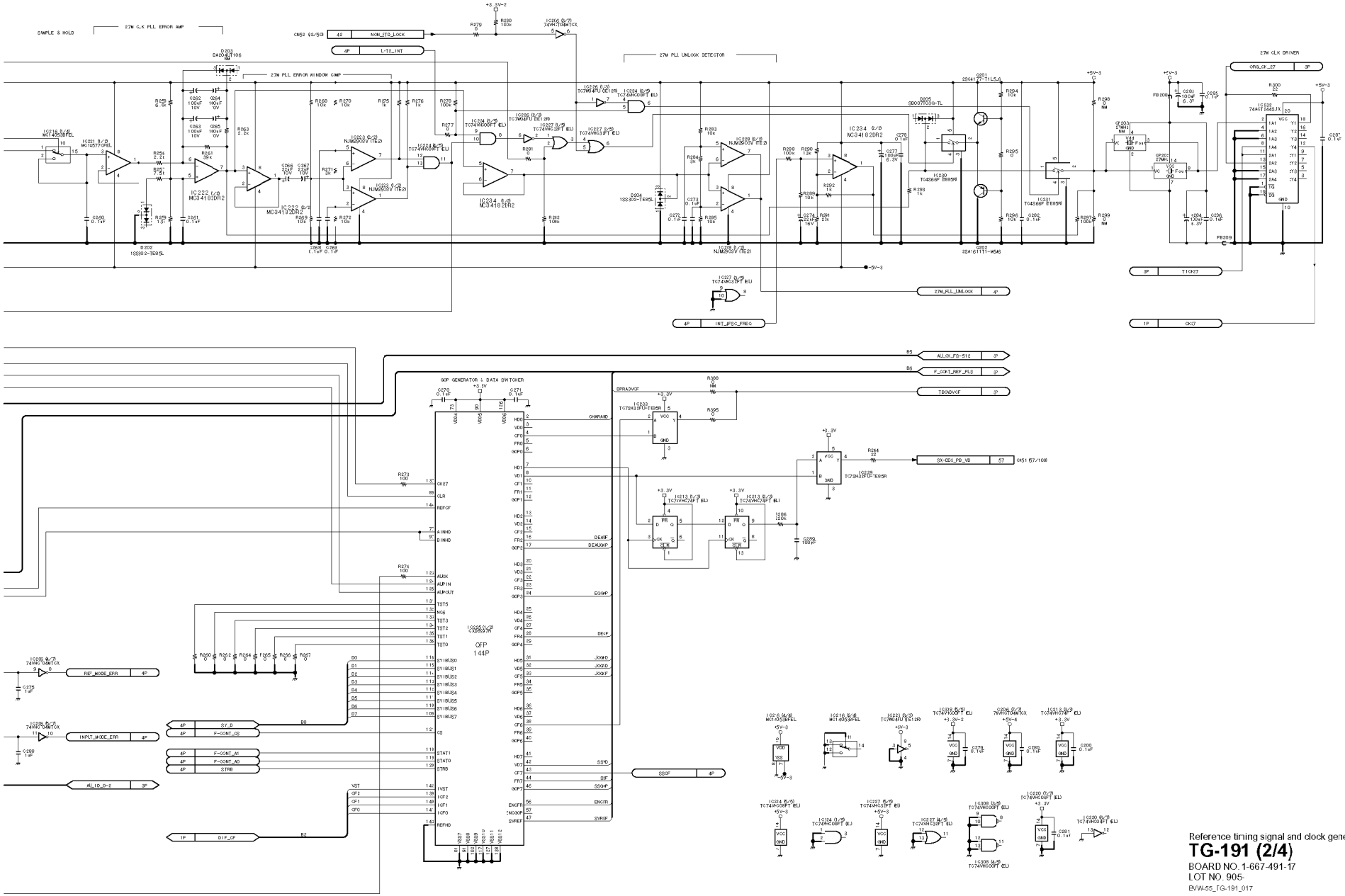

Reference timing signal and clock generator

TG-191 (2/4)

BOARD NO. 1-667-491-17
LOT NO. 905-

EVW-55_TG-191_017

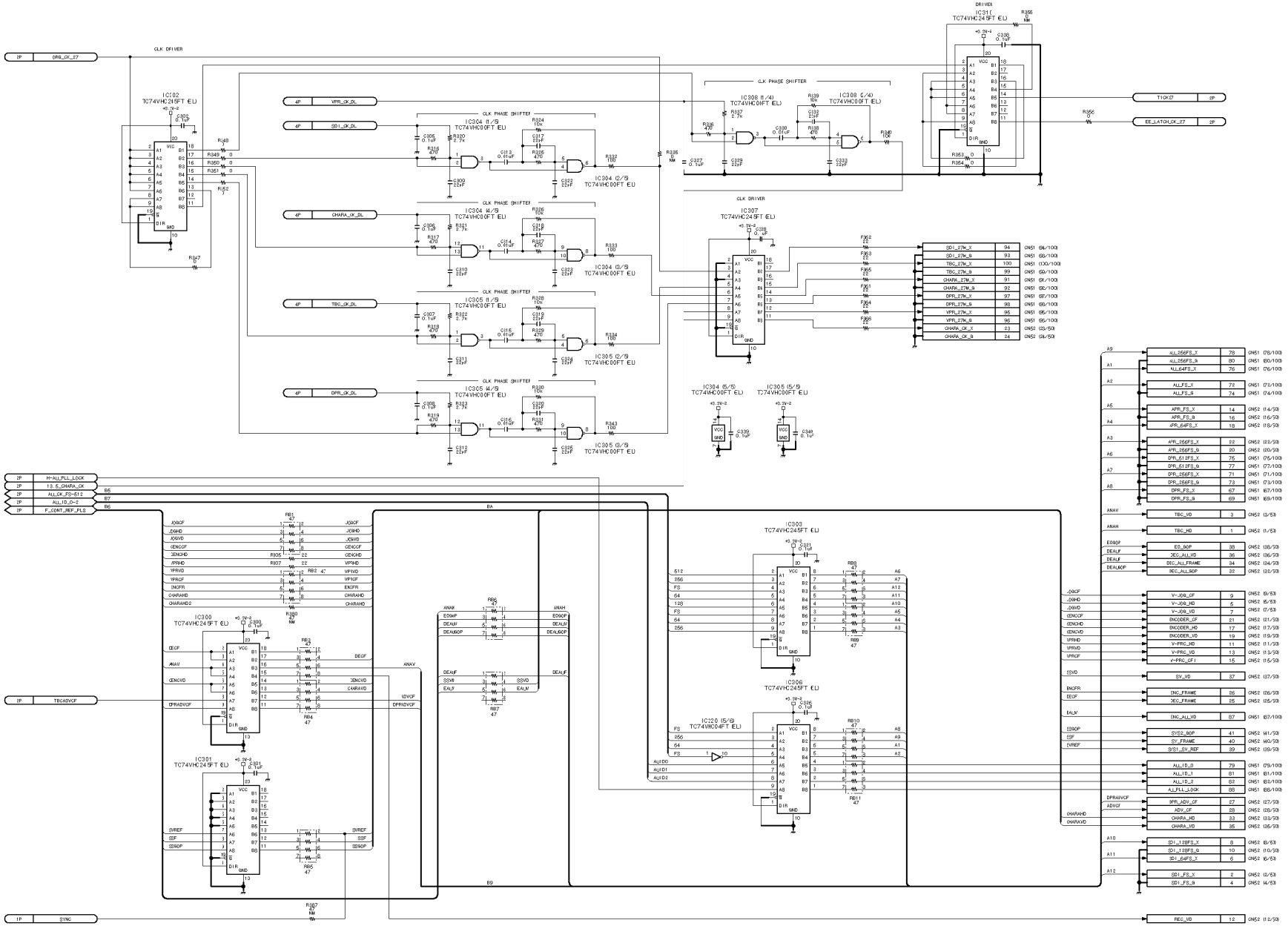

Reference timng signal and clock generator

TG-191 (3/4)

BOARD NO. 1-667-491-17

LOT NO. 905-

BVW-55_TG-191_017

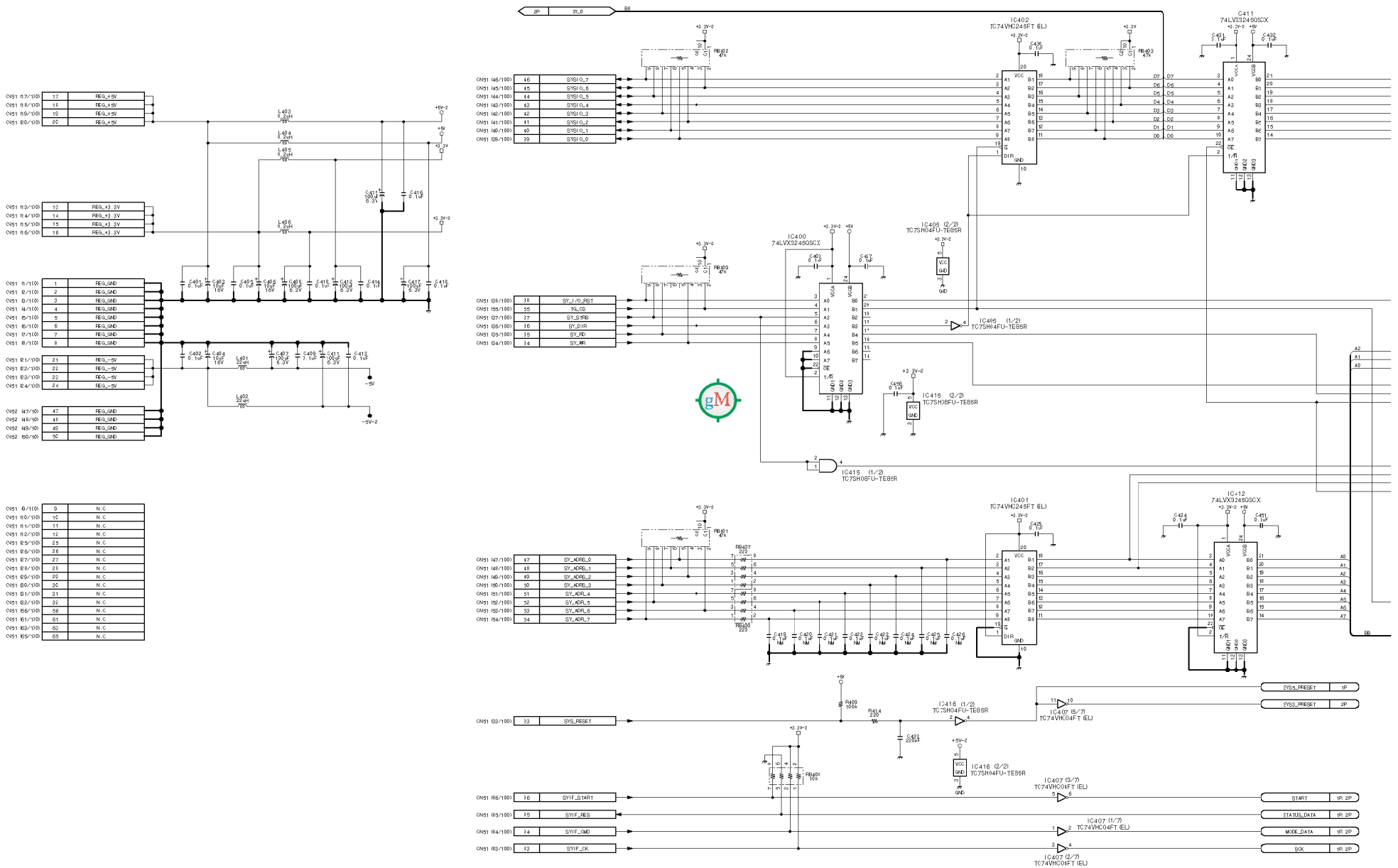
IC402 TC74VHC245FT (EL)
IC411 74LVX3245QSCX
IC400 74LVX3245QSCX
IC401 TC74VHC245FT (EL)
IC412 74LVX3245QSCX
IC405 (2/2) TC7SH04FU-TE85R
IC405 (1/2) TC7SH04FU-TE85R
IC415 (2/2) TC7SH08FU-TE85R
IC415 (1/2) TC7SH08FU-TE85R
IC416 (1/2) TC7SH04FU-TE85R
IC416 (2/2) TC7SH04FU-TE85R
IC407 (7/7) TC74VHC04FT (EL)
IC407 (3/7) TC74VHC04FT (EL)
IC407 (1/7) TC74VHC04FT (EL)
IC407 (2/7) TC74VHC04FT (EL)
SYS_D
SYS_RESET
SYS5_PRESET
SYS3_PRESET
SYIF_START
SYIF_RES
SYIF_CMD
SYIF_CK
START
STATUS_DATA
MODE_DATA
SCK
REG_+5V
REG_+3.3V
REG_GND
REG_-5V
N.C

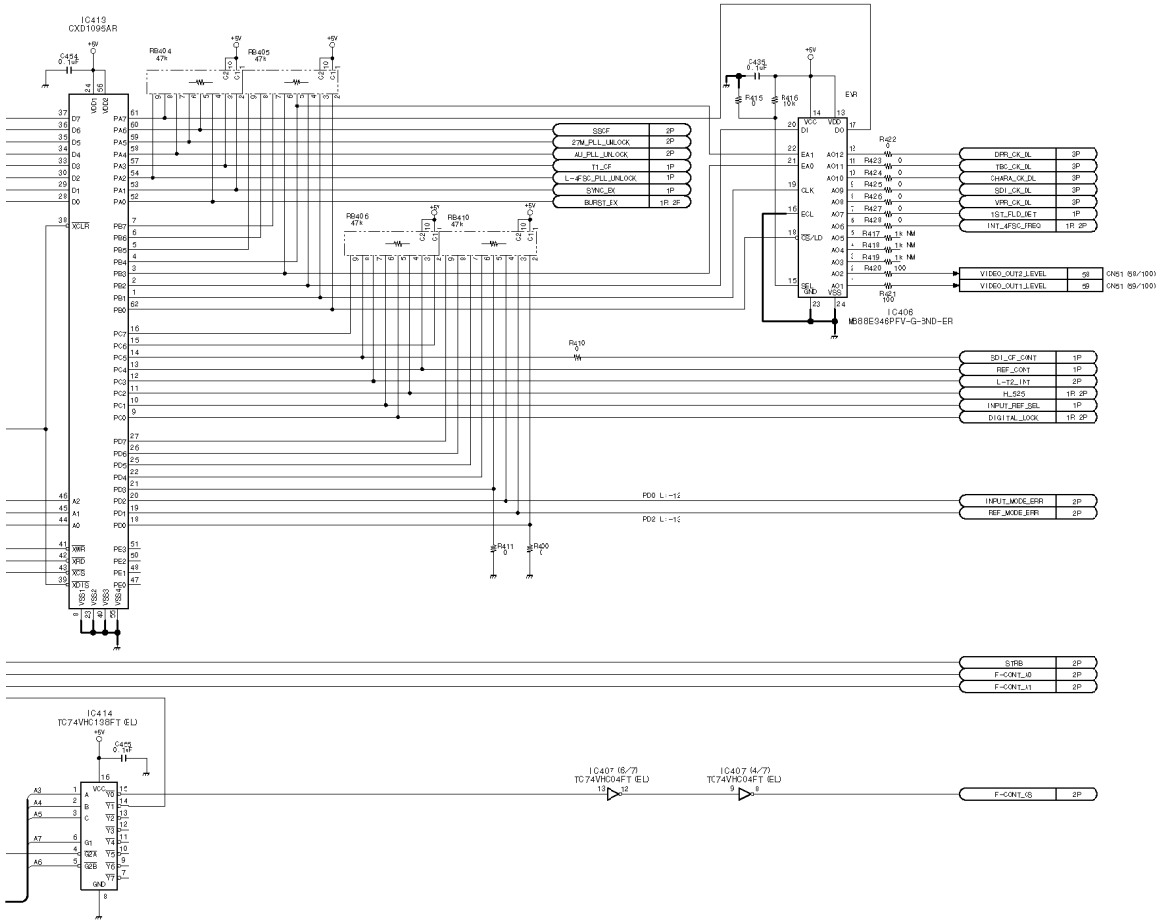

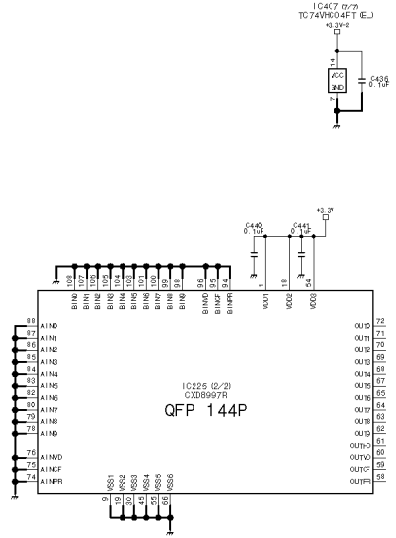

Reference timing signal and clock generator

TG-191 (4/4)

BOARD NO. 1-667-491-17
LOT NO. 905-

EVW-55_TG-191_017

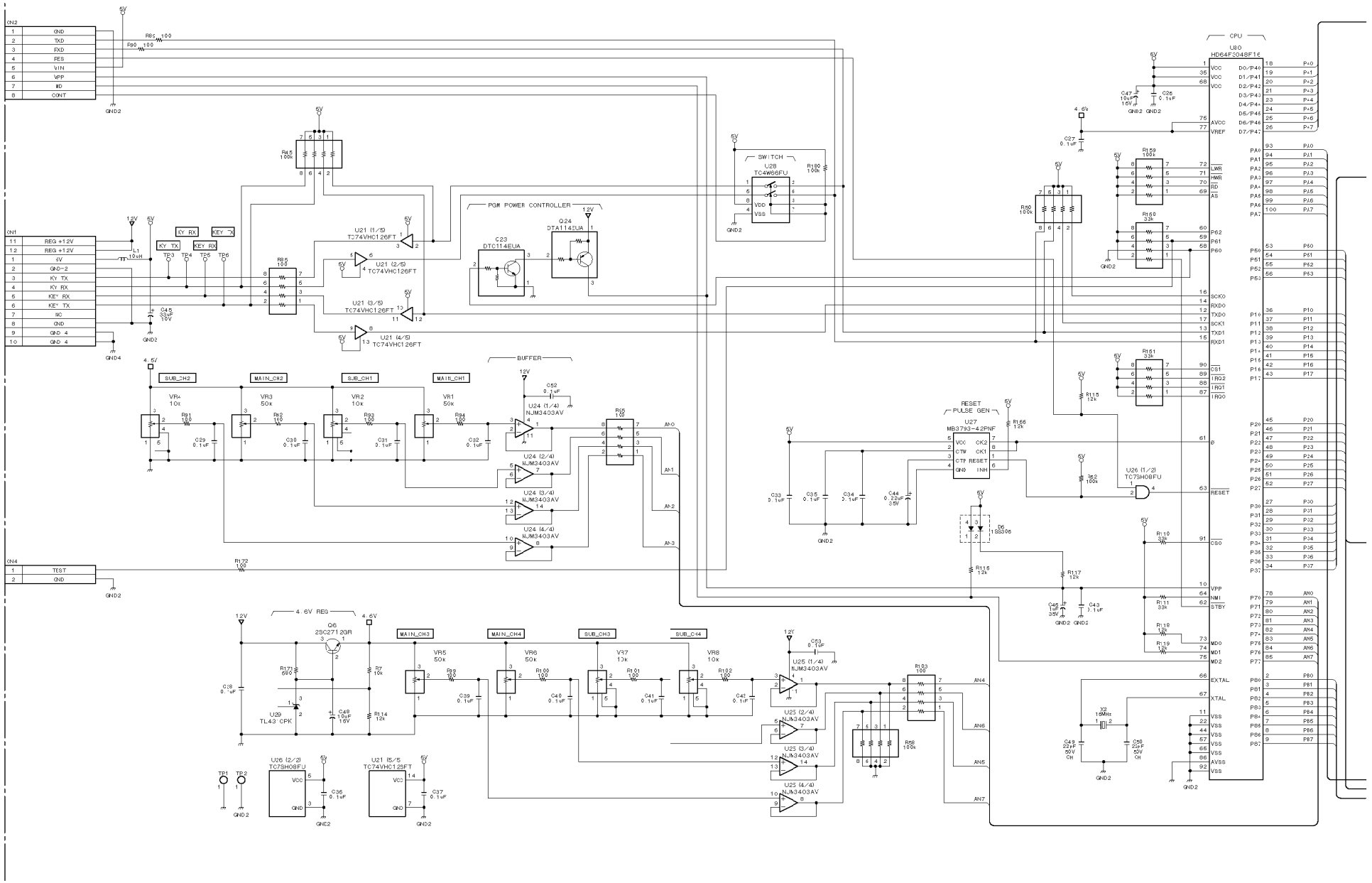

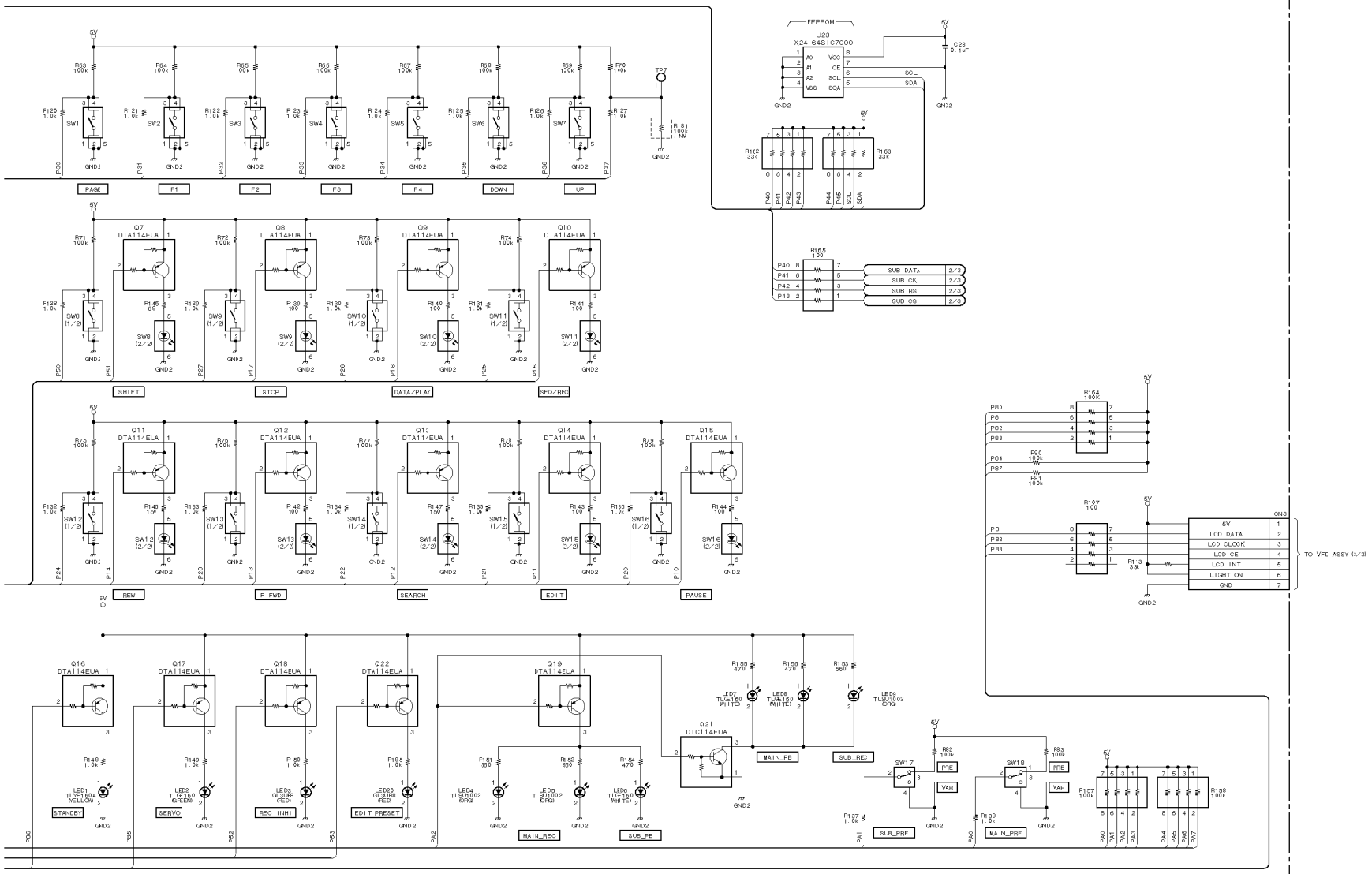

Display and function control

VFD assembly (1/3)

LOT NO. 905-

VFD assembly (2/3)

VFD assembly (2/3)

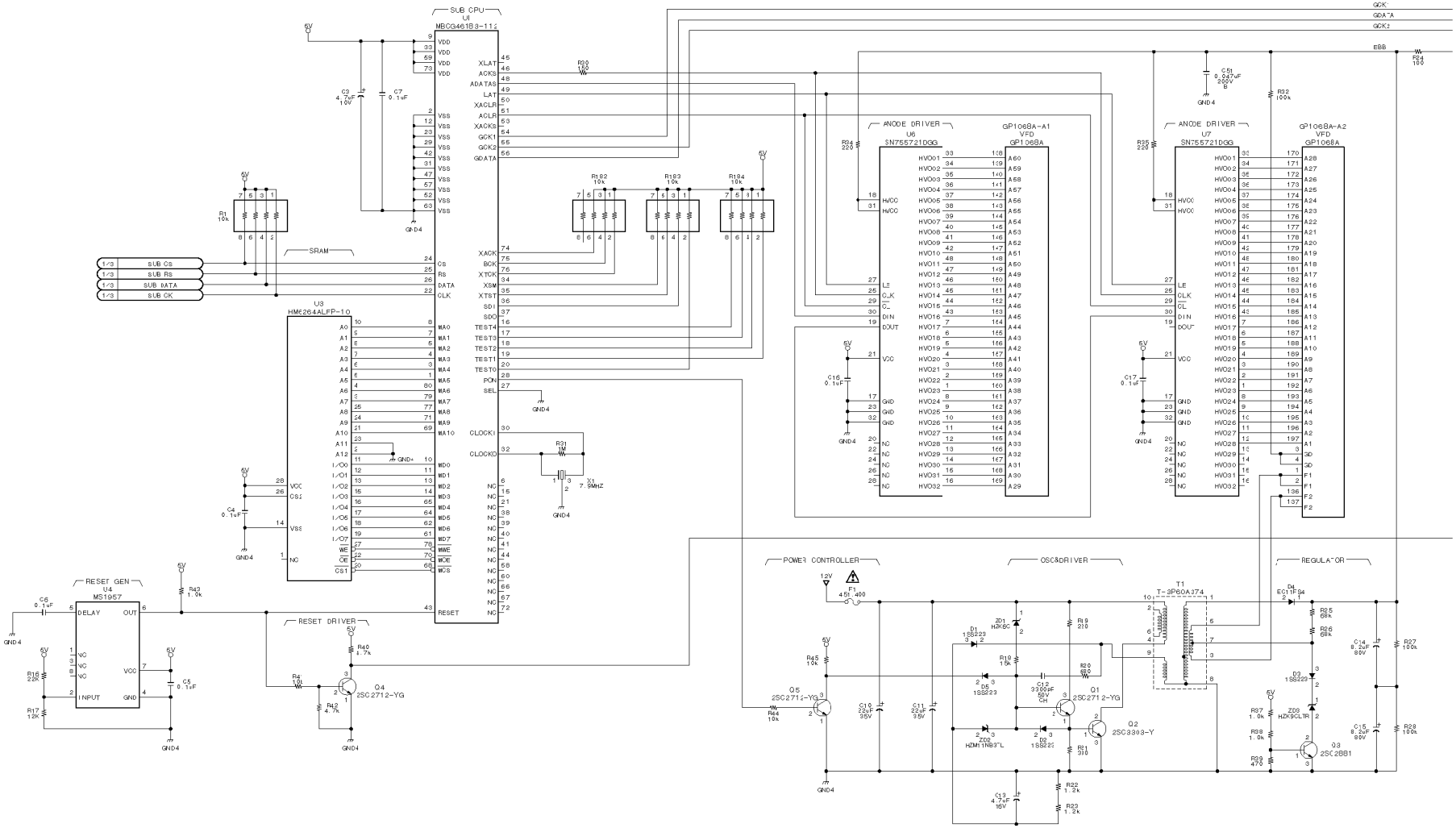

4-136

DNW-A28
DNW-A23P

http://getMANUAL.com

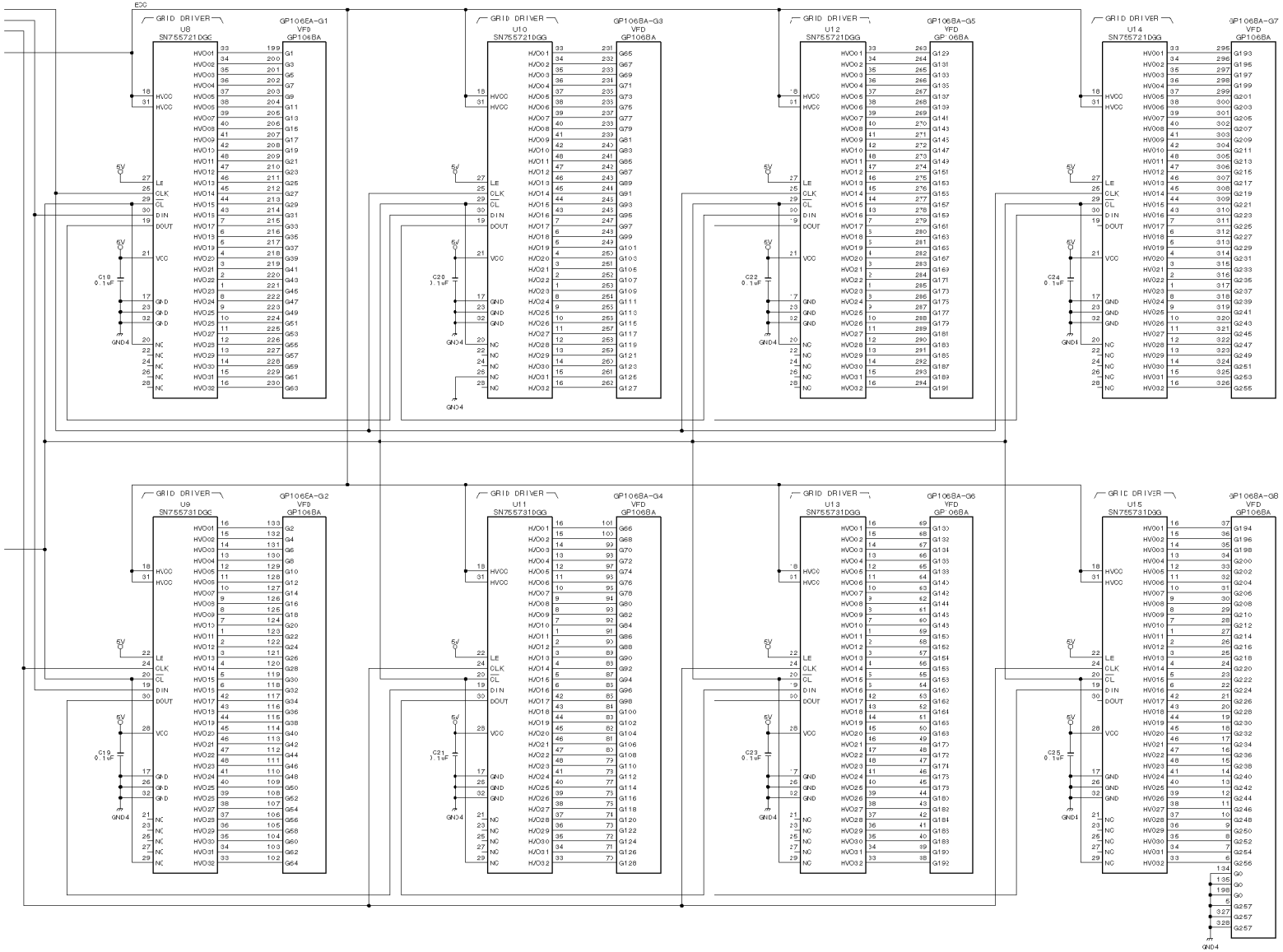

Display and function control

VFD assembly (2/3)

LOT NO. 905-

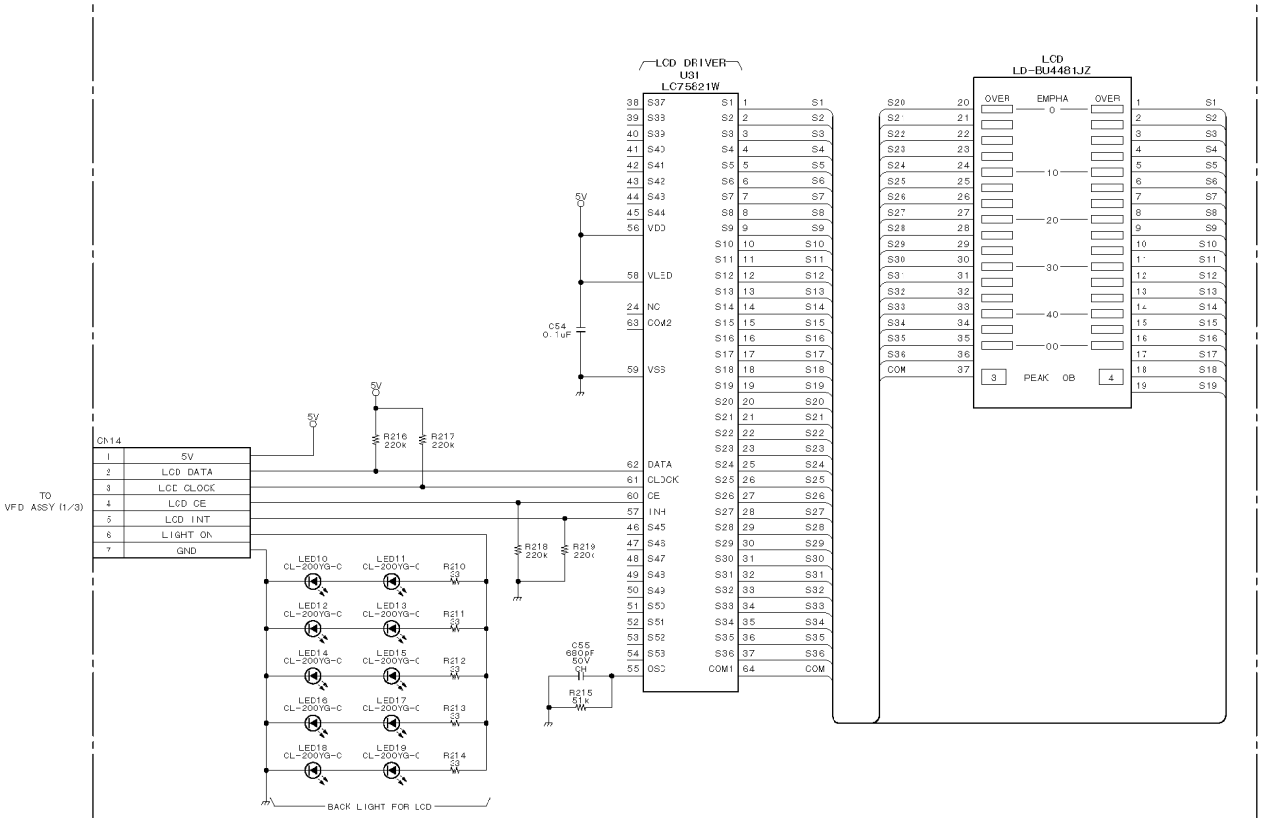

Display and function control

VFD assembly (3/3)

LOT NO. 905-

VPR-34 (1/4)

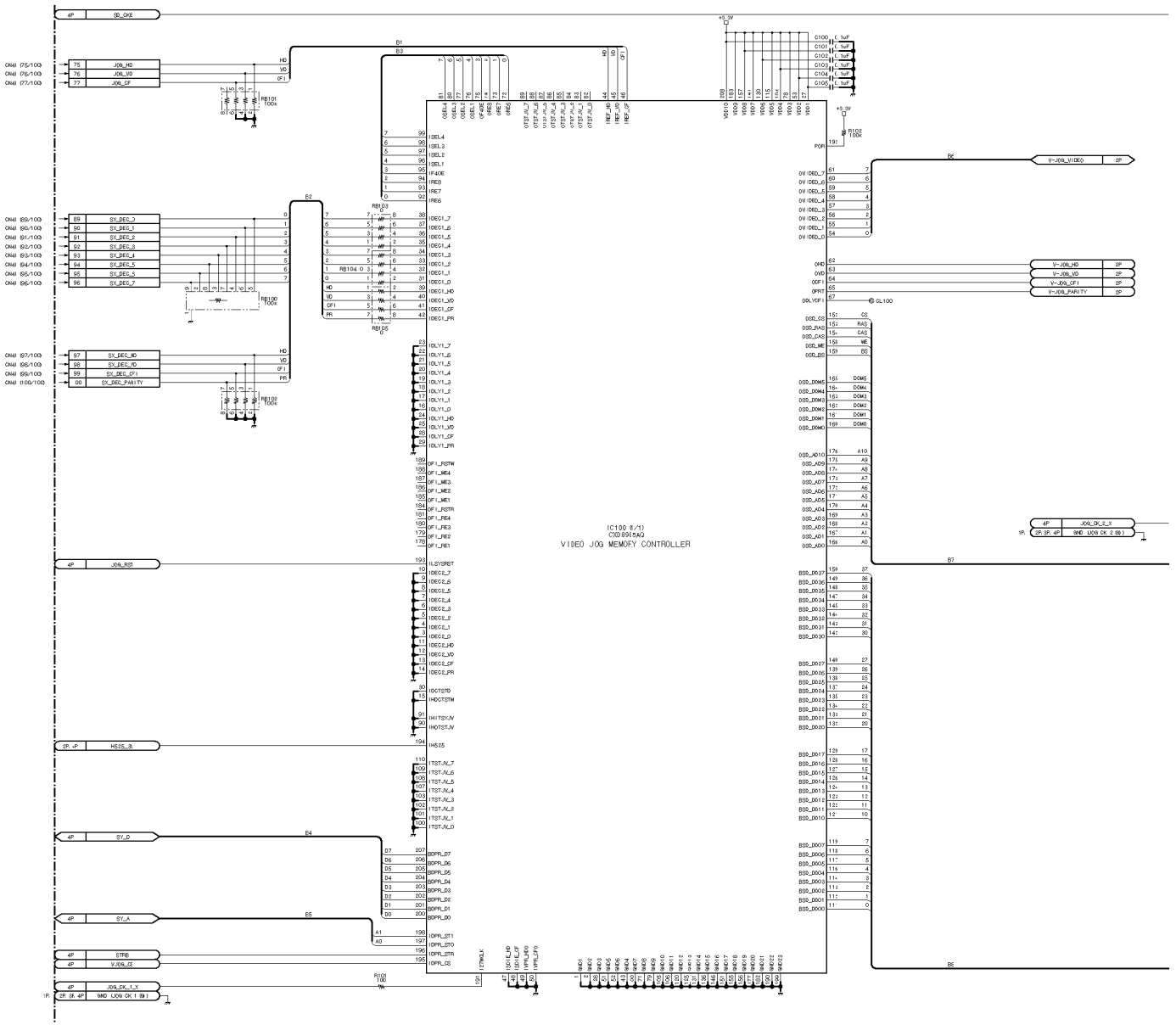

4-140

DNW-A28
DNW-A23P

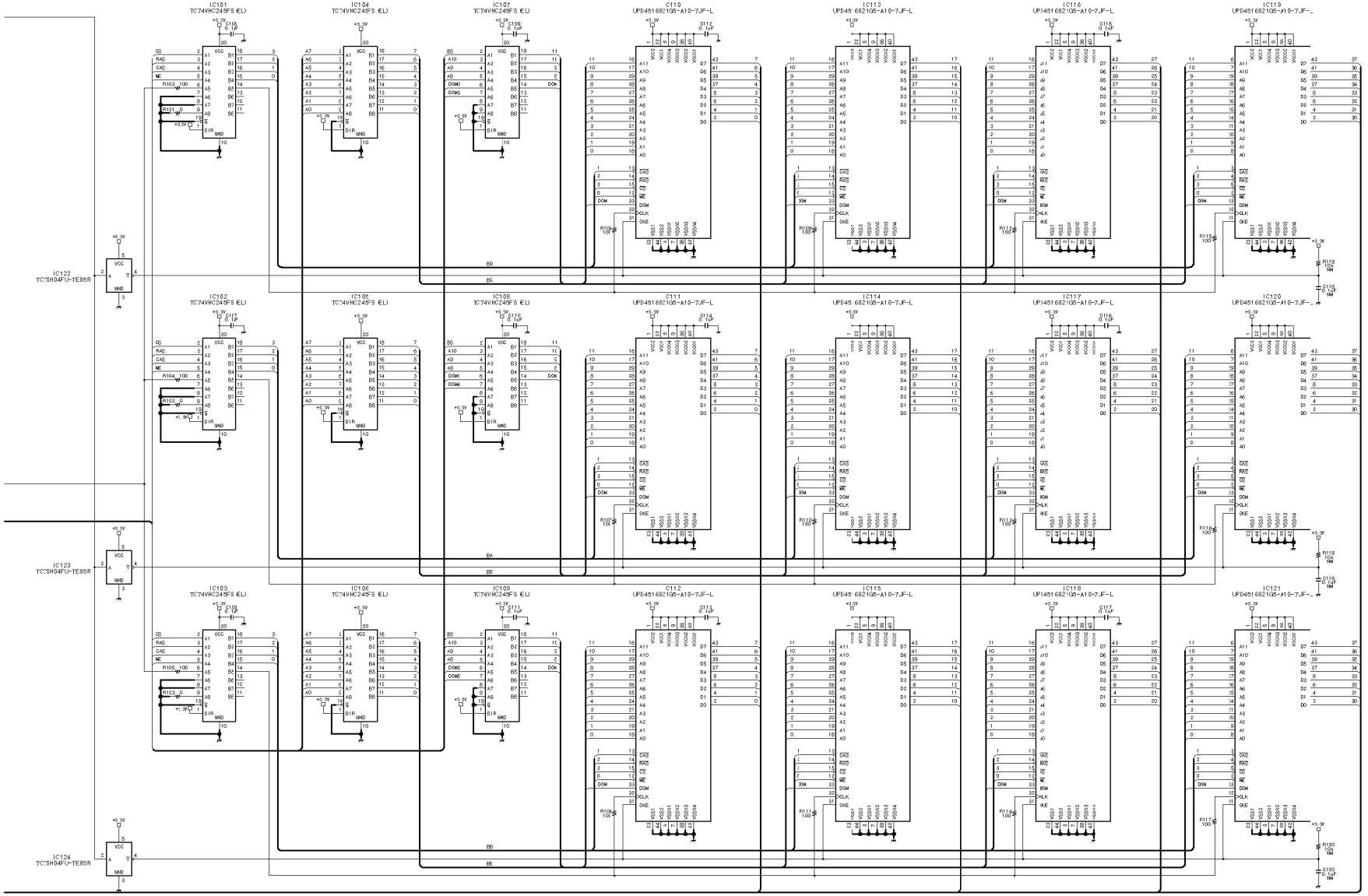

Video signal processor
Video process D-A, Composite encoder

VPR-34 (1/4)

BOARD NO. 1-667-493-13
LOT NO. 905-

DNW-A220_VPR-34_001

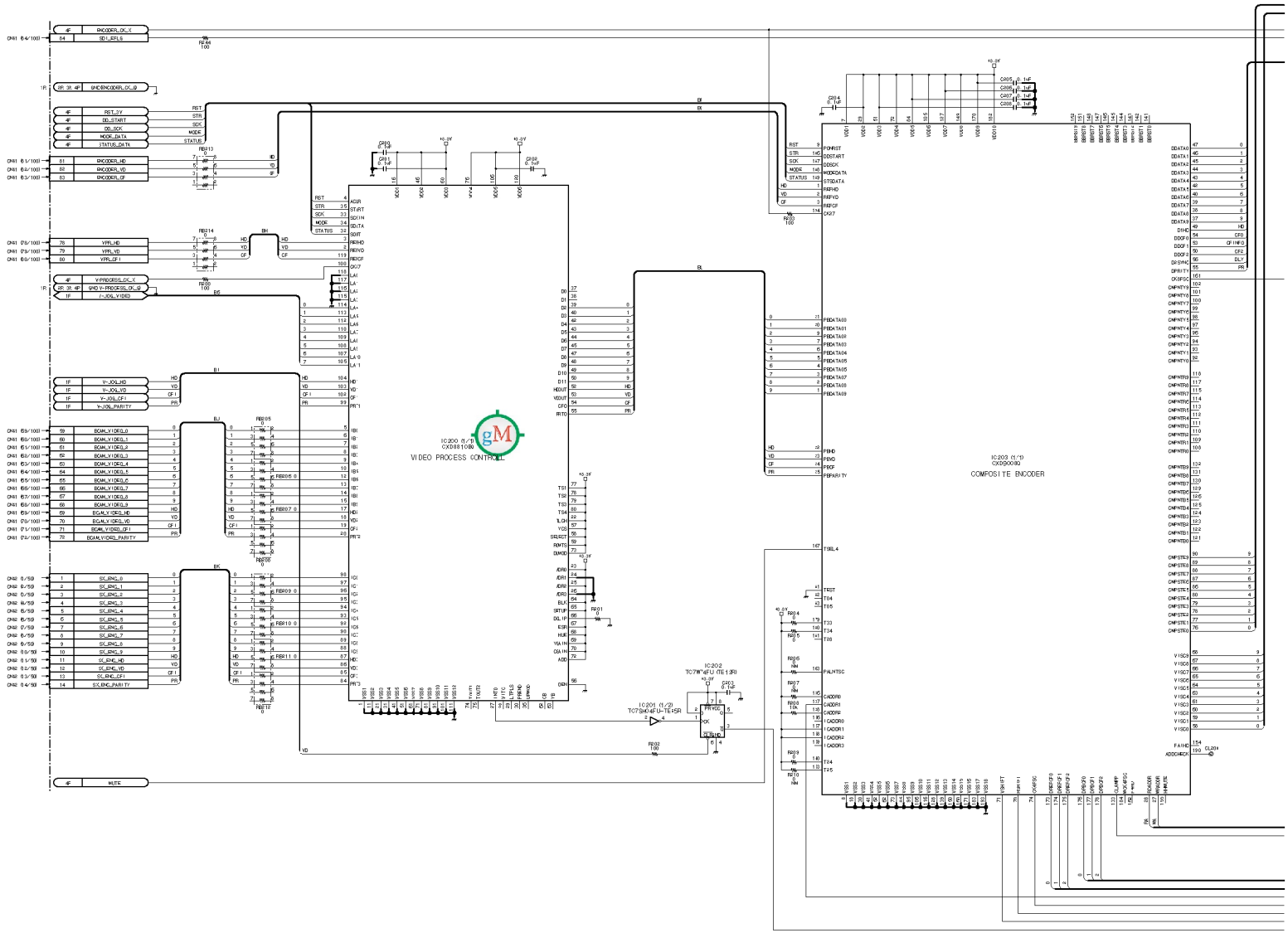
IC200 (1/2)
CXD8810BQ
VIDEO PROCESS CONTROLLER
IC203 (1/2)
CXD9009Q
COMPOSITE ENCODER
IC201 (1/2)
TC7SH04FU-TE15R
IC202
TC7W14FU (TE12R)

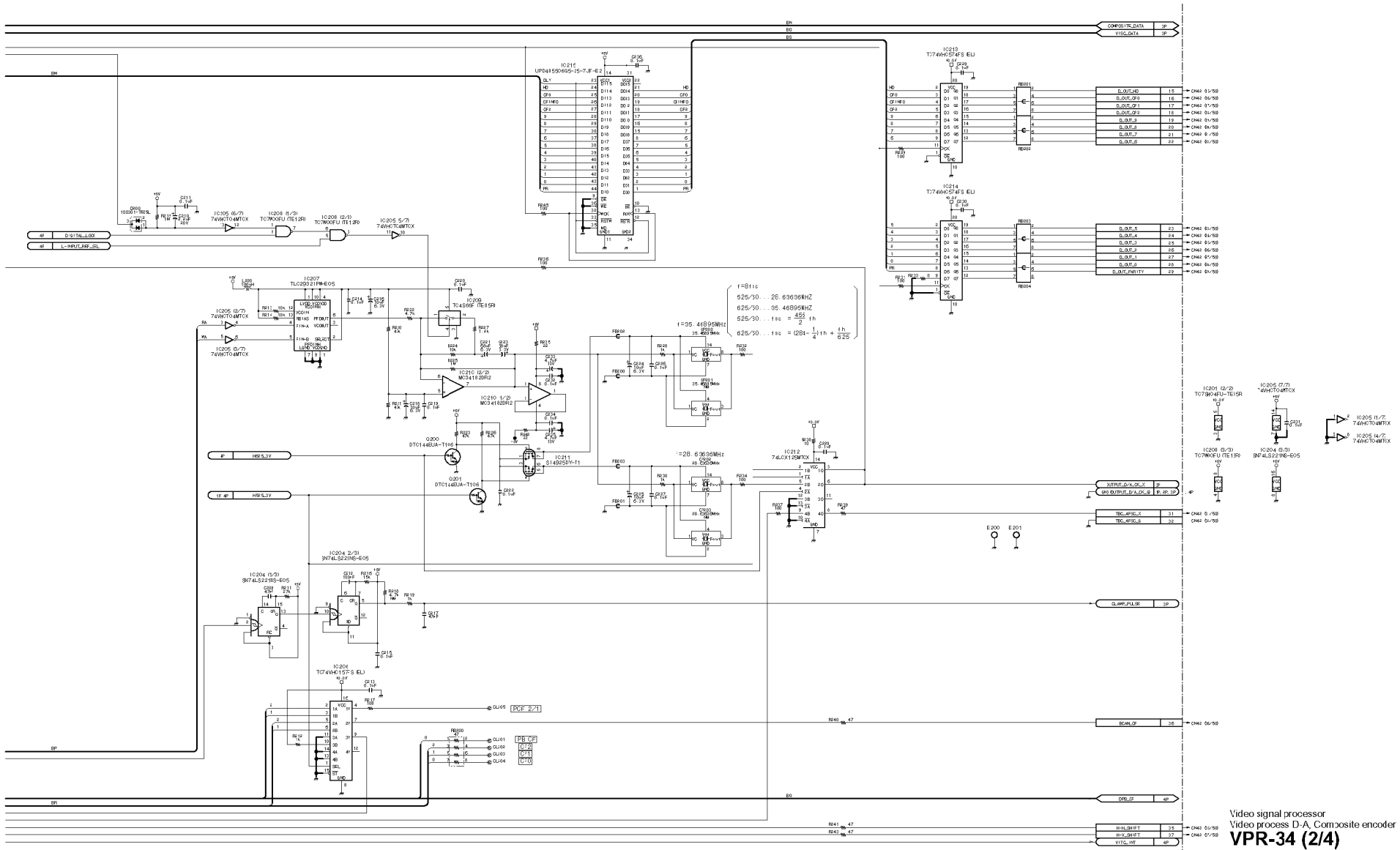

Video signal processor
Video process D-A, Composite encoder

VPR-34 (2/4)

BOARD NO. 1-667-493-13
LOT NO. 905-

CNW-A220_VPR-34_001

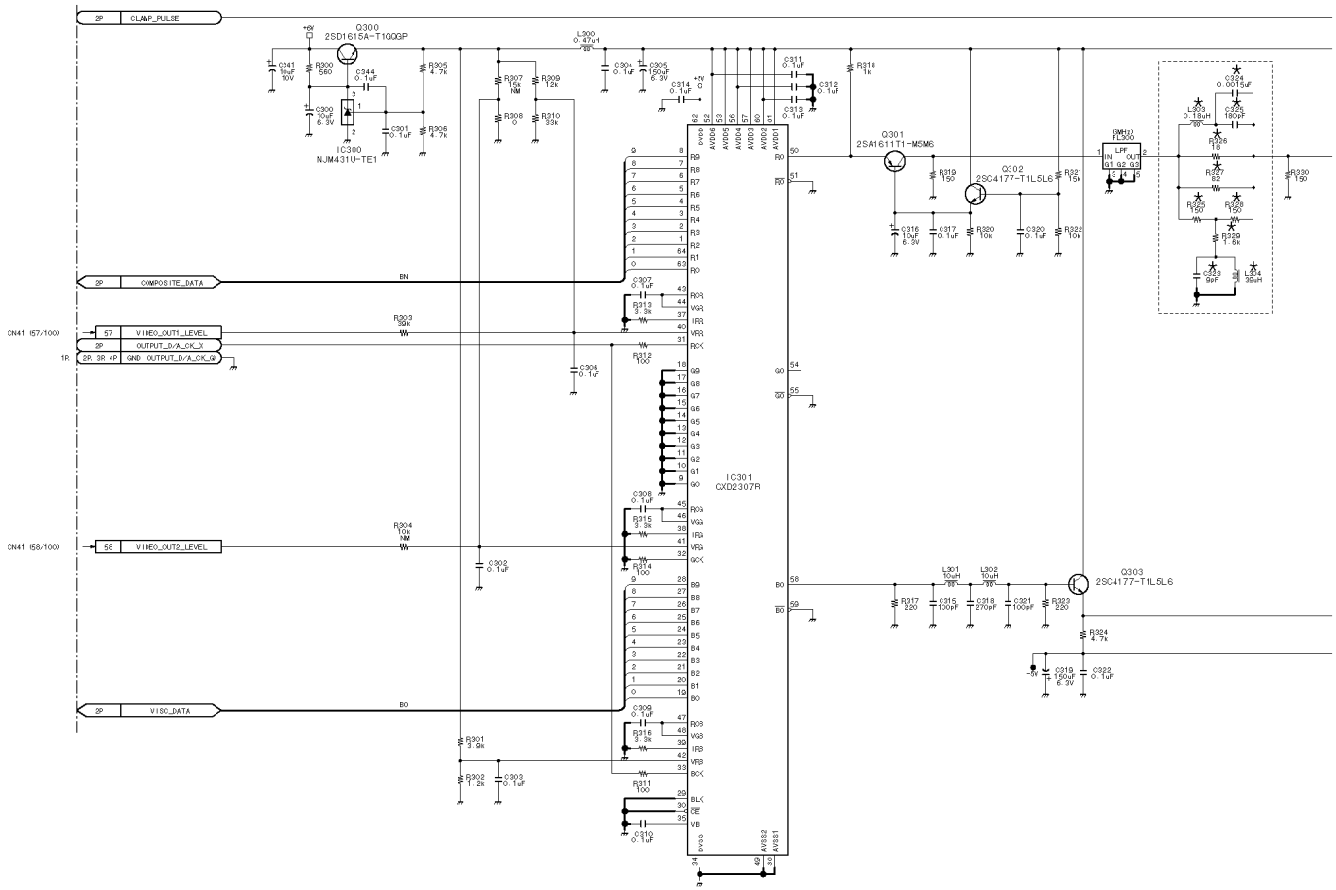
CLAMP_PULSE
COMPOSITE_DATA
VIDEO_OUT1_LEVEL
OUTPUT_D/A_CK_I
GND OUTPUT_D/A_CK_Q
VIDEO_OUT2_LEVEL
VISC_DATA
Q300 2SD1615A-T10QGP
IC380 NJM4311V-TE1
IC301 CXD2307R
Q301 2SA1611T1-M5M6
Q302 2SC4177-T1L5L6
Q303 2SC4177-T1L5L6
LPF FL500

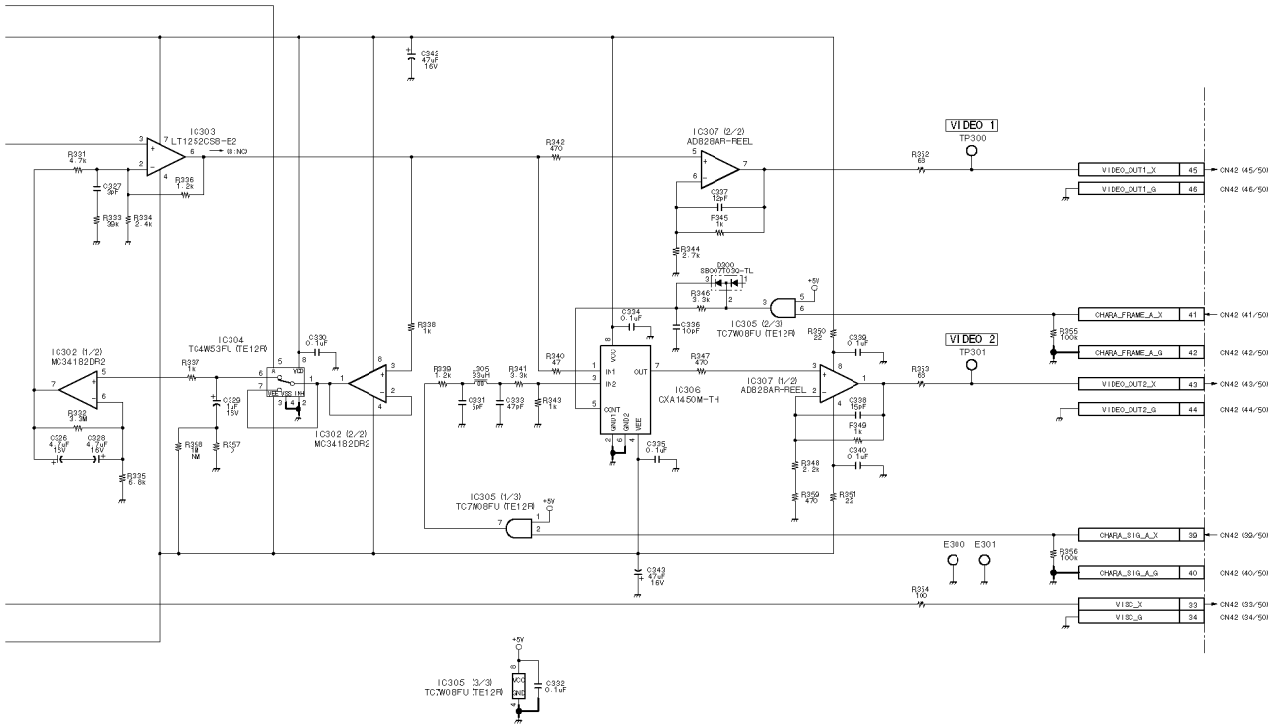

Video signal processor
Video process D-A, Composite encoder

VPR-34 (3/4)

BOARD NO. 1-667-493-13
LOT NO. 905-

CNW-A220_VPR-34_001

VPR-34 (4/4)

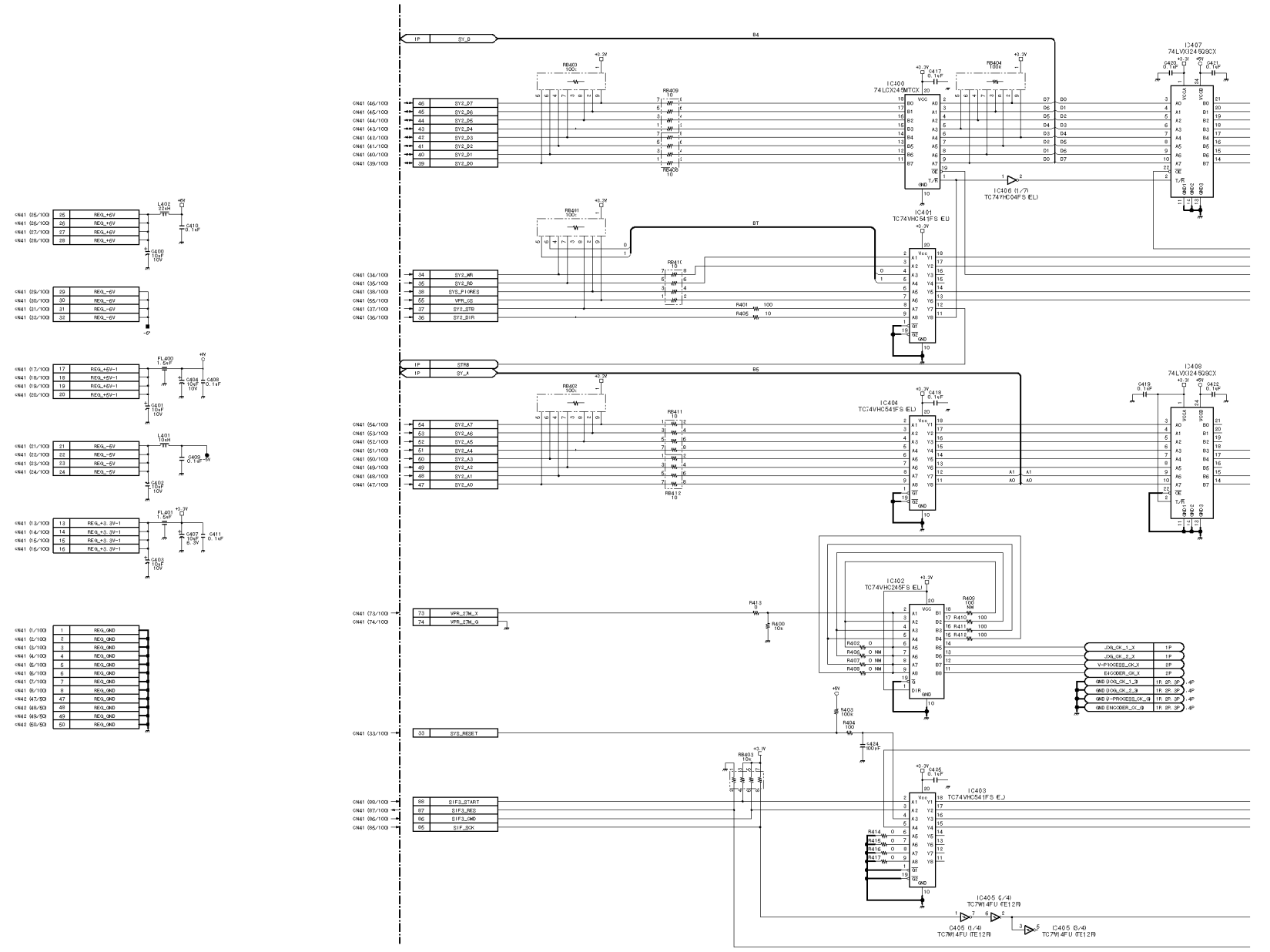

4-146

DNW-A28
DNW-A23P

http://getMANUAL.com

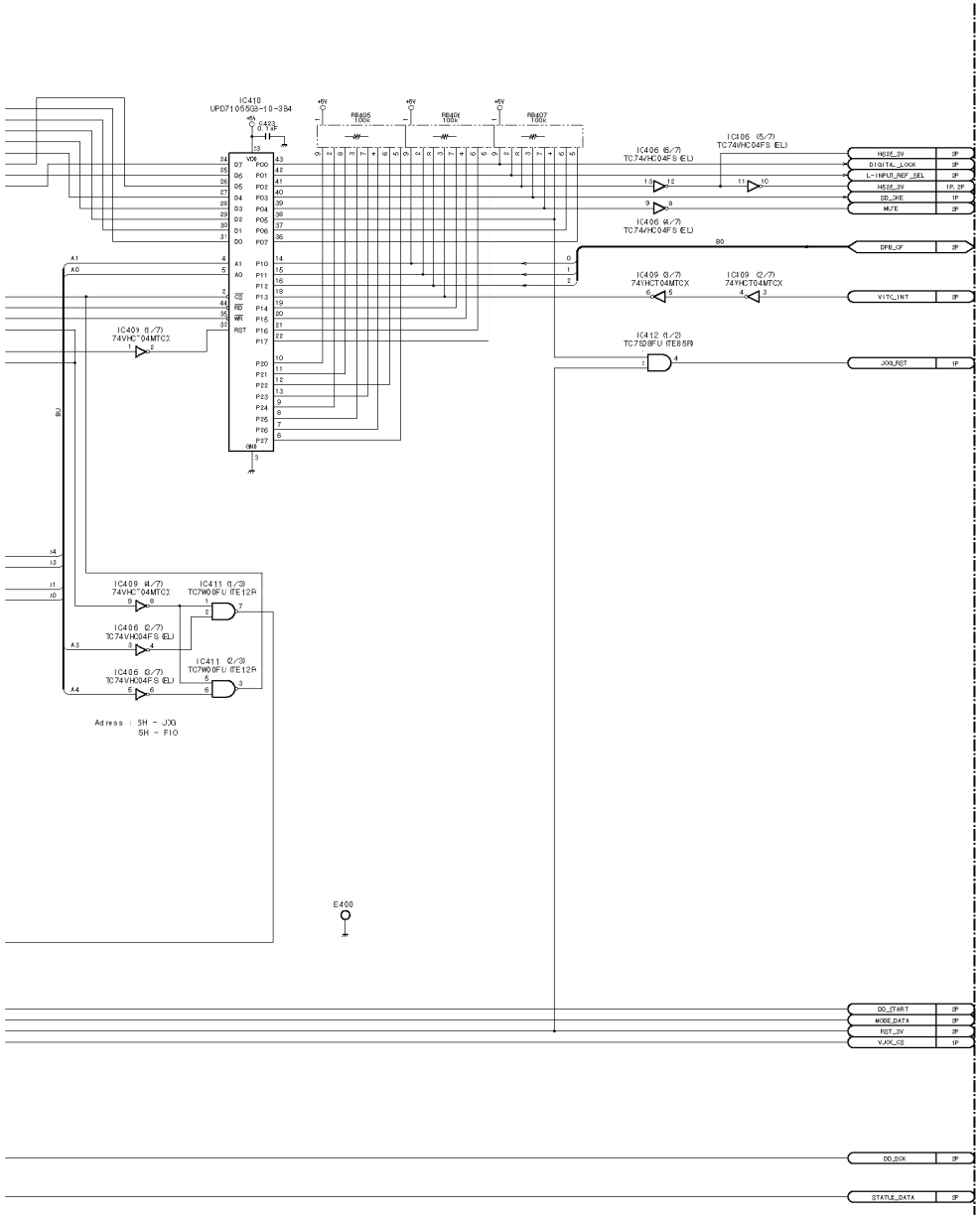

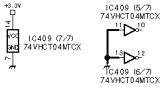

Video signa processor
Video process D-A, Composite encoder

VPR-34 (4/4)

BOARD NO. 1-667-493-13
LOT NO. 905-

DNW-A220_VPR-34_001

DNW-A28
DNW-A28P

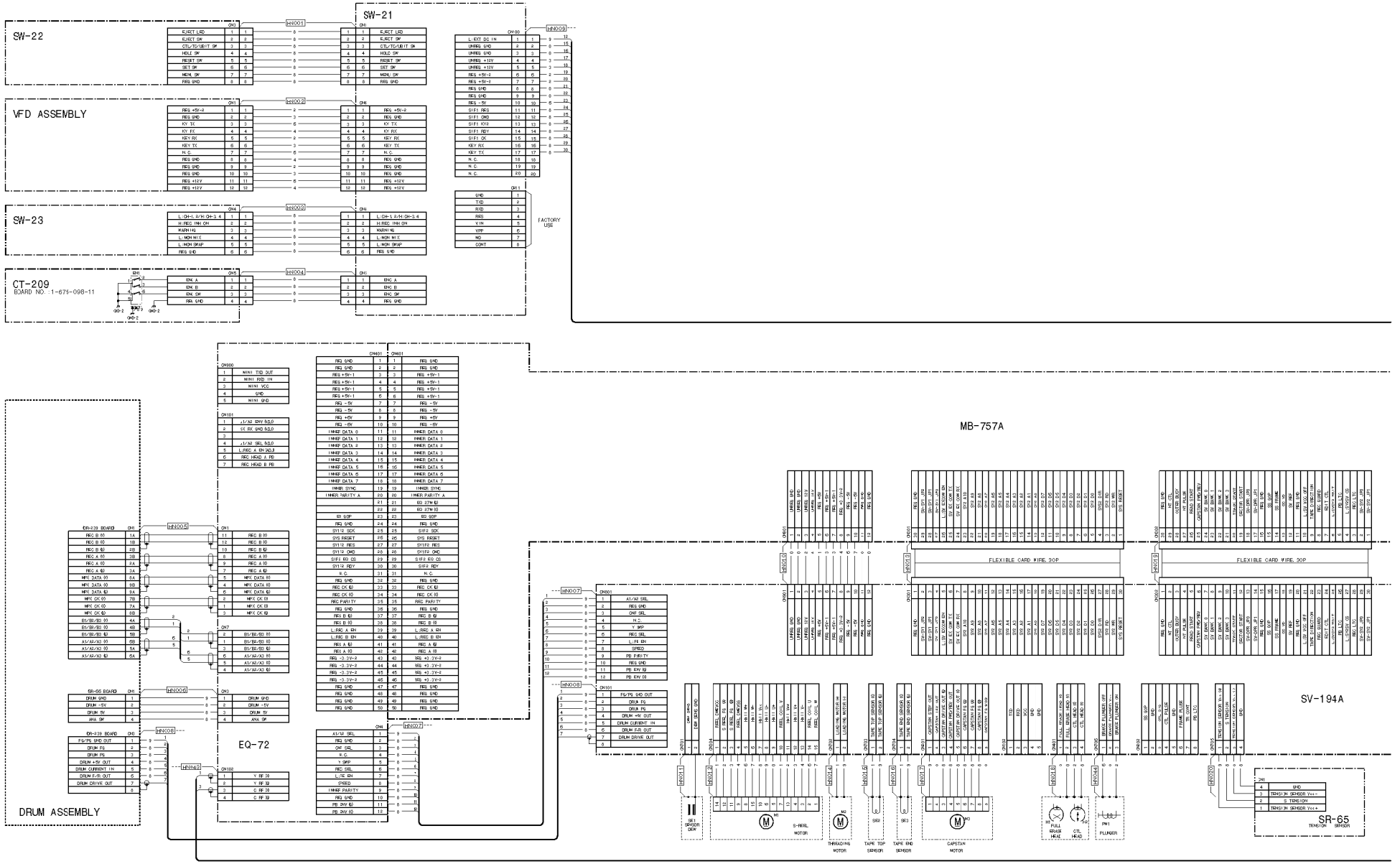
SW-21
SW-22
VFD ASSEMBLY
SW-23
CT-209
BOARD NO. : 1-675-098-11
FACTORY USE
MB-757A
FLEXIBLE CARD WIRE, 30P
FLEXIBLE CARD WIRE, 30P
SV-194A
EQ-72
DRUM ASSEMBLY
SR-65
TENSION SENSOR
S-REEL MOTOR
THREADING MOTOR
TAPE TOP SENSOR
TAPE END SENSOR
CAPSTAN MOTOR
FULL ERASE HEAD
CTL HEAD
PLUNGER

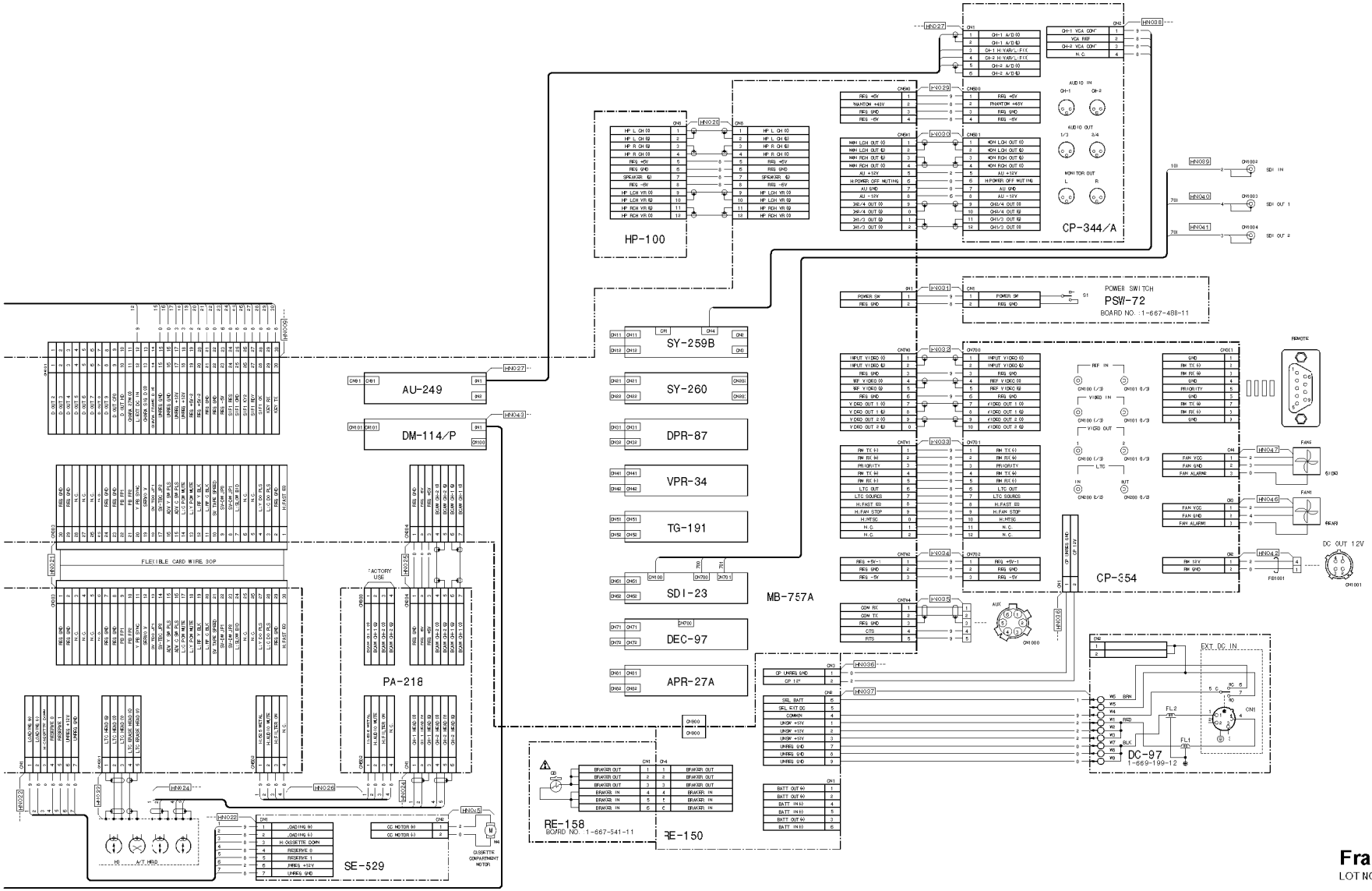

Frame Wiring

LOT NO. 905-

Section 5
Board Layouts

Board Layout Index

		Page
A.	APR-27A	5-2
	AU-249	5-4
C.	CP-344/344A	5-6
	CP-354	5-7
	CT-209	5-7
D.	DC-97	5-7
	DEC-97	5-8
	DM-114/114P	5-10
	DPR-87	5-14
E.	EQ-72	5-16
H.	HP-100	5-17
L.	LCD	5-39
M.	MB-757A	5-18
P.	PA-218	5-21
R.	RE-150	5-22
	RE-158	5-23
S.	SDI-23	5-24
	SE-529	5-27
	SR-65	5-29
	SV-194A	5-28
	SW-21	5-30
	SW-22	5-31
	SW-23	5-31
	SY-259B	5-32
	SY-260	5-34
T.	TG-191	5-36
V.	VFD	5-38
	VPR-34	5-40

System	Board	Circuit Function	Page
Digital processing	DPR-87	Digital data processor Video BRR* encoder/decoder, ECC** encoder/decoder (Outer error correction)	5-14
	SDI-23	4:2:2 component serial digital interface	5-24
Video processing	VPR-34	Video signal processor Video process D-A, Composite encoder	5-40
	DEC-97	Analog composite decoder	5-8
Analog Betacam video PB processing	DM-114 (for DNW-A28) DM-114P (for DNW-A28P)	RF demodulator for analog Betacam PB, TBC***	5-10
Audio processing	APR-27A	Audio signal processor	5-2
	AU-249	Audio A-D (Analog CH1/2 input), Audio D-A (Analog CH1/2 output) Audio D-A (Monitor output)	5-4
	PA-218	Head amplifier for analog Betacam PB	5-21
RF processing	EQ-72	RF equalizer REC current control, PB EQ, Analog Betacam PB buffer Inner error correction	5-16
Timing generator	TG-191	Reference timing signal and clock generator	5-36
System control	SY-259B	System control (SYS1)	5-32
	SY-260	System control (SYS2)	5-34
Motor driver/sensor	SV-194A	Servo control, Motor driver, Sensors	5-28
	SR-65	S tension sensor	5-29
Front panel	SW-21	Lower control panel	5-30
	SW-22	Control panel (EJECT, CTL/TC/U-BIT, HOLD, RESET, SET, MENU)	5-31
	SW-23	Control panel (WARNING Indi., REC INHI, METER, MONITOR)	5-31
	CT-209	Jog dial	5-7
	VFD assembly	Display and function control	5-38
Connector panel	CP-344 (for SY) CP-344A (for J)	Connector board (AUDIO/MONITOR system), select switch and audio amplifier (AUDIO INPUT/OUTPUT, MONITOR OUTPUT)	5-6
	CP-354	Connector board (VIDEO/REMOTE/SDI/DC/TC system), select switch and amplifier (VIDEO INPUT/OUTPUT, REMOTE, SDI IN/OJT, DC OUT, TC IN/OUT)	5-7
	DC-97	DC IN terminal board	5-7
Power	RE-150	Switching regulator	5-22
	RE-158	Breaker	5-23
Others	MB-757A	Motherboard	5-18
	HP-100	Headphones jack	5-17
	PSW-72	Power switch	—
	SE-529	Cassette compartment	5-27

*BRR: Bit Rate Reduction **ECC: Error Correction Coding ***TBC: Time Base Corrector

APR-27A(1-667-465-12)

C101	*E4	C928	*A2	Q915	*B1	R922	*B1	TP709	D3
C200	*E3	C929	*B1	Q916	*B2	R923	*B1	TP801	B4
C201	*G4	C930	B2	Q917	*B2	R924	*B1	TP802	B4
C202	*G4	C931	C2	Q918	*B1	R925	*B2		
C203	*G5	C1301	D2	Q919	*A1	R926	*B1	*:B SIDE	
C204	*G5	C1401	F2	Q920	*A2	R927	*B2		
C205	*G5	C1501	G2	Q921	*A1	R928	*B1		
C301	D2	C1601	H2			R929	*E5		
C302	*D2			R17	*B3	R931	*C2		
C303	*D1	CN81	C5	R18	*A3	R932	*C2		
C304	*D1	CN82	G5	R200	*B5	R933	*C1		
C305	*D2			R201	*B5	R934	*C1		
C306	*C2	D301	B2	R202	*B4	R935	*B2		
C307	D1	D401	B2	R203	*B4	R936	*A2		
C401	F2	D501	G2	R204	*B5	R937	*B1		
C402	*F2	D601	H2	R205	*B5	R938	*B1		
C403	*E1	D900	*A1	R206	*B5	R939	*A1		
C404	*E1	D901	*A2	R207	*B5	R940	*A1		
C405	*E2	D902	*A2	R210	*D2	R942	*A2		
C406	*E2	D903	*A3	R211	*E2	R943	*A1		
C407	*F1	D904	*A3	R304	D2	R944	*B2		
C501	G2	D905	B1	R305	D2	R945	*A1		
C502	*G2	D906	B2	R401	*E2	R946	*A2		
C503	*F1			R402	*E2	R947	*A2		
C504	*G1	E101	B2	R403	*E2				
C505	*F2	E201	C3	R404	E2	RB101	E4		
C506	*F2	E701	G4	R405	E2	RB102	E4		
C507	*G1	E702	*C3	R501	*F2	RB103	E4		
C601	H2	E801	*G3	R504	F2	RB201	*G5		
C602	*H2			R505	F2	RB202	*G5		
C603	*H1	IC101	*E4	R601	*G2	RB203	G4		
C604	*H1	IC200	*B2	R602	*G2	RB204	*G5		
C605	*H2	IC201	*B4	R603	*H2	RB301	C1		
C606	*G2	IC202	*B4	R604	G2	RB302	*C2		
C607	*H1	IC203	*B5	R605	G2	RB401	E1		
C701	*F5	IC301	*D2	R700	E3	RB402	*E2		
C702	*D4	IC302	*C1	R701	*B5	RB501	F1		
C703	*G3	IC401	*B2	R702	*F5	RB502	*F2		
C704	*G3	IC402	*B1	R703	*D5	RB601	G1		
C705	*G4	IC501	*F2	R704	*F5	RB602	*G2		
C706	*F4	IC502	*F1	R705	*F5	RB701	*D5		
C707	*F2	IC601	*H2	R706	*F5	RB702	*F2		
C708	*E2	IC602	*G1	R707	*F4	RB801	*C5		
C709	*E3	IC701	F5	R708	*F4	RB802	*B5		
C710	*E4	IC702	D4	R709	*F4	RB803	C5		
C711	*F4	IC703	F4	R710	D5	RB804	*C5		
C712	*G3	IC704	H4	R711	*D4	RB805	*C5		
C713	*H3	IC705	*F3	R712	*D4	RB806	*B5		
C714	*F3	IC706	*G3	R713	*D5	RB807	*B5		
C715	*G3	IC707	*F5	R714	*F4	RB808	*C5		
C716	*F5	IC708	*D3	R715	*F4	RB809	*C5		
C717	D3	IC710	B3	R716	*B4	RB810	*C5		
C718	B3	IC711	B3	R717	*B4	RB811	*C5		
C719	E3	IC801	D3	R718	*D3	RB812	C4		
C801	*D3	IC802	*B4	R719	*E3	RB813	C4		
C802	*B4	IC803	*C4	R720	*E3	RB814	*D3		
C803	*B4	IC804	*C4	R721	*F2	RB815	*B4		
C804	*C4	IC805	*D4	R722	*B4	RB816	D3		
C805	*C4	IC806	*D4	R723	F5	RB817	*B4		
C806	C4	IC807	*C4	R724	F4	RB818	*B3		
C807	B4	IC808	D2	R725	F4	RB819	*C3		
C808	B3	IC809	D3	R726	F4	RB821	D2		
C809	C2	IC900	*B2	R727	F4	RB822	D4		
C810	*D2	IC901	*A3	R728	*D3	RB823	D4		
C900	*A1	IC902	*B1	R729	E3	RB824	*B3		
C901	B5	IC903	B2	R800	D3	RB825	*D4		
C902	A5	IC904	*A1	R801	*D2	RB826	C4		
C903	B4	IC915	A2	R802	*D3	RB827	*C3		
C904	A4			R803	*C5	RB828	D4		
C905	A4	L901	B4	R804	*C5	RB829	C4		
C906	A3	L902	A4	R900	*B1	RB830	D4		
C907	B3	L903	A4	R901	*B1	RB831	C4		
C908	*A1	L904	C3	R902	*B3	RB832	*C4		
C909	*A1	L906	B1	R903	*D2	RB833	*C4		
C910	B1	L907	B2	R904	*B2	RB834	D4		
C911	*B1			R905	*A3	RB835	D3		
C912	B2	Q8	*B3	R906	*A3	RB900	D3		
C913	C1	Q9	*A3	R907	*D2				
C914	C2	Q900	*B1	R908	*B2	TP201	G4		
C915	C1	Q901	*A2	R909	D1	TP202	G4		
C916	C1	Q902	*A3	R910	D1	TP203	G4		
C917	*A1	Q903	*A3	R911	D2	TP204	G5		
C918	*A2	Q904	*B1	R912	D1	TP205	G5		
C919	A2	Q905	*B1	R913	D2	TP206	G5		
C920	A1	Q906	*B1	R914	D1	TP701	E3		
C921	*C2	Q907	*B2	R915	D2	TP702	E3		
C922	*C1	Q908	*B2	R916	D2	TP703	G4		
C923	*A2	Q909	*A2	R917	*D1	TP704	F5		
C924	*A2	Q911	*B5	R918	*D1	TP705	F5		
C925	*A1	Q912	*A1	R919	*D2	TP706	F4		
C926	*A2	Q913	*A1	R920	*B2	TP707	F4		
C927	*B2	Q914	*B2	R921	*B1	TP708	E4		

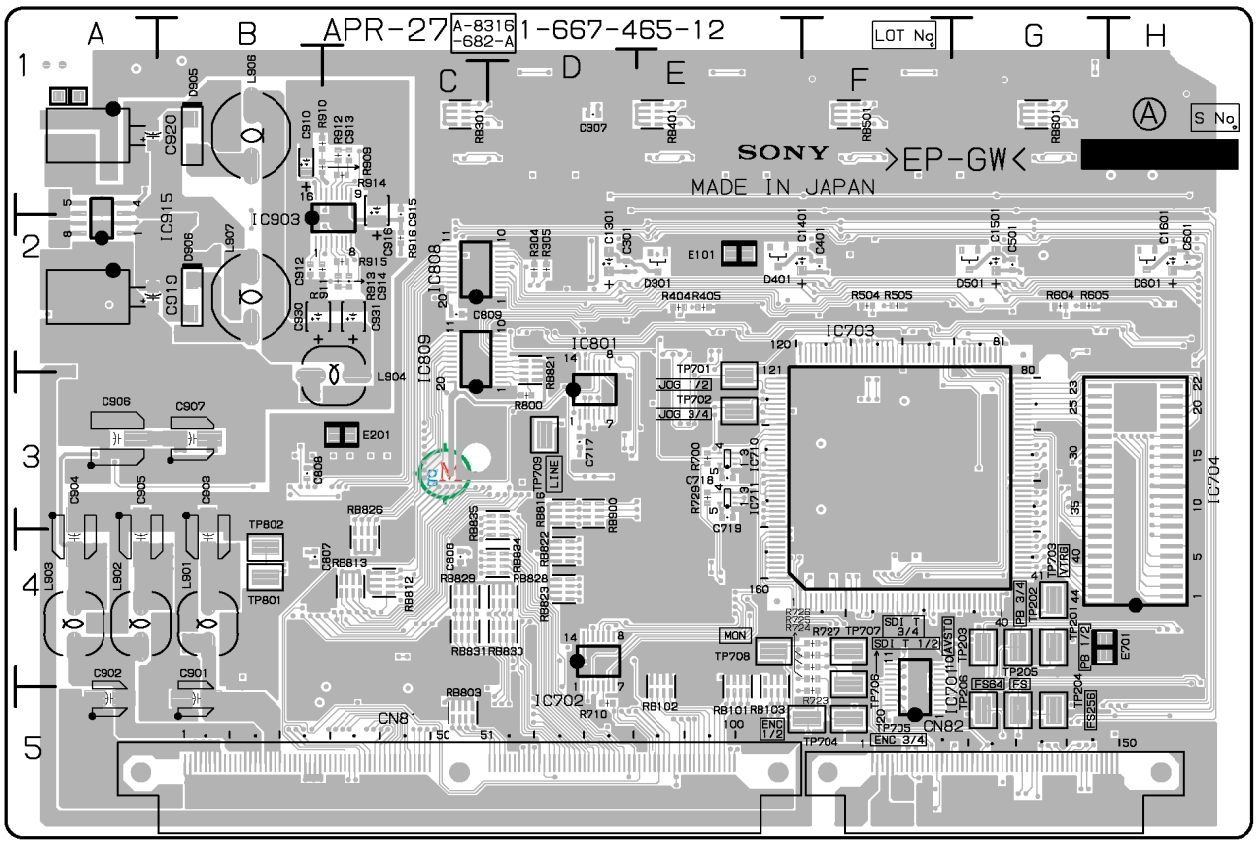

APR-27A -A SIDE-
SUFFIX: -12

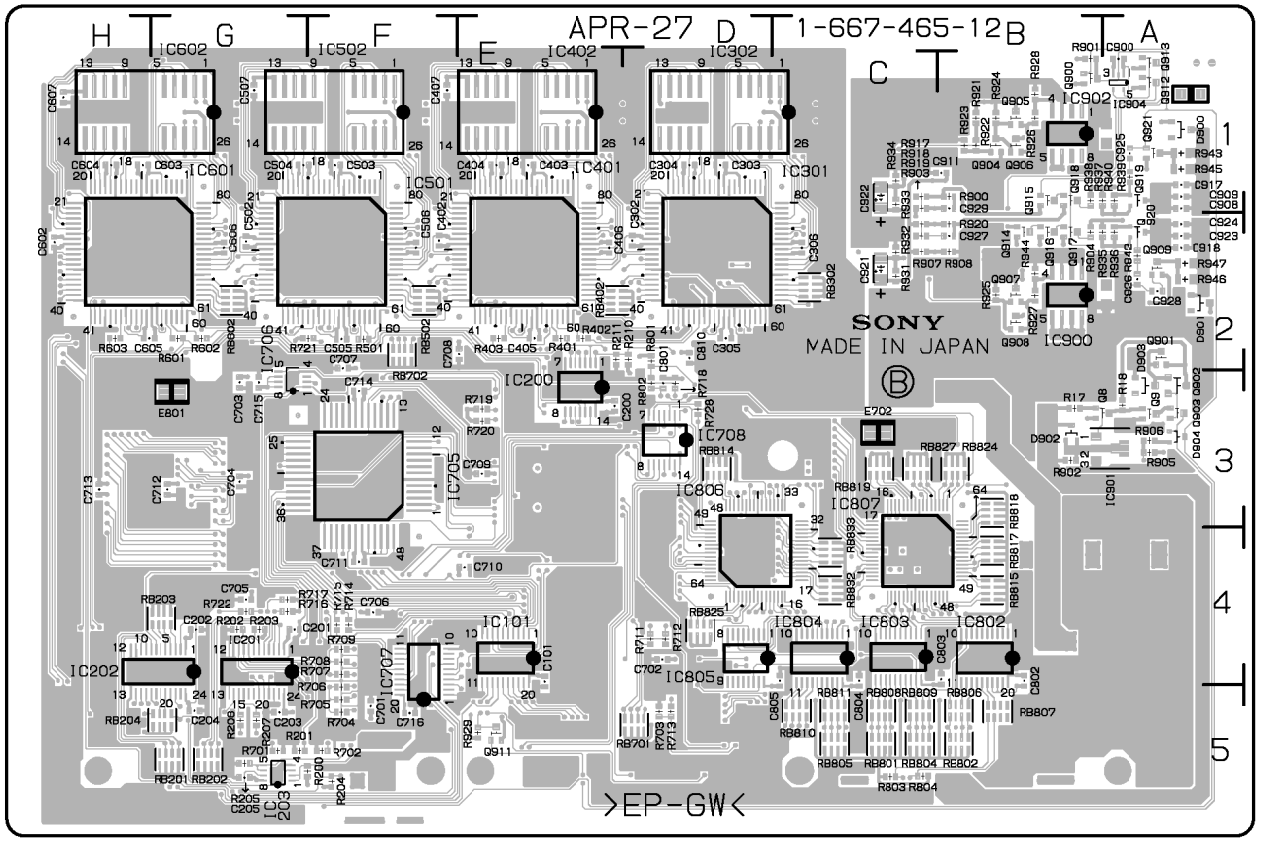

APR-27A -B SIDE-
SUFFIX: -12

AU-249(1-667-466-13)

C1	*B4	C228	F5	C803	G3	IC503	*D3
C2	*B5	C229	*G5	C804	*G3	IC504	D3
C3	*B5	C230	*G5	C805	G3	IC601	*C2
C4	B4	C231	*F5	C806	*G3	IC602	*C3
C5	*B5	C232	*G5	C807	*F3	IC603	*D3
C6	*B5	C233	*G4	C808	*G3	IC701	B1
C7	*B4	C234	*F4	C809	G3	IC702	*B1
C8	*B5	C235	*G4	C810	G3	IC703	B1
C9	*B5	C236	G5	C811	*E4	IC704	*B1
C10	*B4	C237	*G4	C812	*E4	IC751	D1
C11	*A5	C240	F4	C813	*E4	IC752	*D1
C12	*B4	C242	*E1	C814	*E5	IC753	D1
C13	*B4	C243	*F2	C815	C4	IC755	*D1
C14	B4	C300	*B3	C816	D4	IC801	*G3
C15	*B4	C302	B2	C817	D4	IC802	E4
C16	*F3	C303	B2	C818	*C4	IC803	*E4
C17	*F3	C304	B2	C819	*C5	IC804	*E4
C18	*G3	C305	*B2	C820	*D5	IC805	C5
C19	*G3	C306	*C2	C821	*D5	IC806	D5
C20	F3	C307	C2			IC807	D5
C21	F3	C308	B2	CL1	B5	IC808	*E4
C22	H3	C309	C2	CL2	D5		
C23	H3	C310	*B2	CL3	C5	L1	B5
C24	A4	C311	*B2	CL4	E5	L2	B5
C101	*G1	C312	B3	CL5	E5	L701	*A1
C102	G1	C313	*B3	CL6	E4	L751	*C1
C103	G1	C314	*C3	CL7	E5	L801	*F4
C104	*H1	C315	*B3	CL8	E4	L802	*C4
C105	H1	C400	*A3	CL9	E5		
C106	*H1	C402	A2	CL10	E4	Q1	B4
C107	*H2	C403	A2	CL601	D3	Q2	B4
C108	*H2	C404	A2	CL801	C4	Q3	B4
C109	*H2	C405	*A2	CL802	C4	Q4	*F3
C110	*H2	C406	*A2	CL803	E5	Q5	H3
C111	*G1	C407	B2			Q6	*F3
C112	*G1	C408	A2	CN1	F1	Q7	*H3
C113	G1	C409	B2	CN2	C1	Q8	*F3
C114	G2	C410	*A2	CN91	C5	Q9	*H3
C115	*G2	C411	*A2			Q10	A4
C116	*G2	C412	A3	D1	*B4	Q101	H1
C117	*G2	C413	*B3	D2	*B5	Q102	H2
C118	*G2	C414	*B3	D3	*B5	Q103	H2
C119	*G2	C415	*A3	D101	*H1	Q104	H2
C120	*H2	C500	*D3	D102	*G3	Q105	H2
C121	H2	C502	D2	D201	*F1	Q105	H2
C122	H2	C503	D2	D202	*F3	Q107	H2
C123	*G3	C504	D2	D801	E4	Q103	G2
C124	*G5	C505	*D2	D802	E4	Q109	*G2
C125	*G5	C506	*E2			Q201	F1
C126	*H5	C507	E2	E1	*A5	Q202	G2
C127	*G5	C508	D2	E2	B1	Q203	F2
C128	G5	C509	E2	E101	G1	Q204	F2
C129	*H5	C510	*D2	E102	G5	Q205	F2
C130	*H5	C511	*D2	E201	*G1	Q205	F2
C131	*H5	C513	*E3	E202	F5	Q207	F2
C132	*H5	C514	*E3	E301	B3	Q203	E2
C133	*H4	C515	*D3	E401	A3	Q209	*E2
C134	*H4	C516	*D3			Q211	*G5
C135	*H4	C517	*D3	IC1	*B4	Q301	C2
C136	H5	C518	D3	IC2	*B5	Q302	B2
C137	*F4	C600	*C3	IC3	*A5	Q401	B2
C138	*G4	C602	C2	IC4	B4	Q402	A2
C139	*G4	C603	C2	IC5	*A4	Q501	E2
C140	H4	C604	C2	IC6	*F3	Q502	D2
C142	*G1	C605	*C2	IC7	*H3	Q601	D2
C143	*G2	C606	*D2	IC101	*G1	Q602	C2
C201	*E1	C607	D2	IC102	*H1	Q701	*B1
C202	F1	C608	C2	IC103	*H1	Q751	*D1
C203	F1	C609	D2	IC104	H1	Q801	*E5
C204	*F1	C610	*C2	IC105	*G2		
C205	F1	C611	*C2	IC106	G2	R1	*A4
C206	*F1	C613	*C3	IC107	G2	R2	*B4
C207	*F2	C614	*D3	IC108	*H5	R3	*B4
C208	*F2	C615	*C3	IC109	*H4	R4	*B4
C209	*F2	C618	C3	IC110	G4	R5	*A5
C210	*F2	C700	*B1	IC111	*G4	R6	*A4
C211	*F1	C701	*B1	IC112	*G4	R7	*A4
C212	*F1	C702	*B1	IC201	*F1	R8	*E4
C213	F1	C703	*B1	IC202	*F1	R9	B4
C214	E2	C704	*B1	IC203	*F1	R10	*B4
C215	*E2	C705	*B1	IC204	F1	R11	*F3
C216	*F2	C709	*A1	IC205	*E2	R12	*H3
C217	*F2	C710	*A1	IC206	E2	R13	*F3
C218	*F2	C750	*D1	IC207	F2	R14	*H3
C219	*F2	C751	*E1	IC208	*F5	R15	*F3
C220	*F2	C752	*D1	IC209	*F4	R16	*F3
C221	F2	C753	*D1	IC212	*F5	R17	*H3
C222	F2	C754	*D1	IC301	*B2	R18	*H3
C223	*F3	C755	*D1	IC302	*B3	R19	*A4
C224	*F5	C759	*C1	IC401	*B2	R20	A4
C225	*F5	C760	*C1	IC402	*B3	R21	A4
C226	*F5	C801	G3	IC501	*E2	R22	A4
C227	*F5	C802	G3	IC502	*E3	R101	*G1

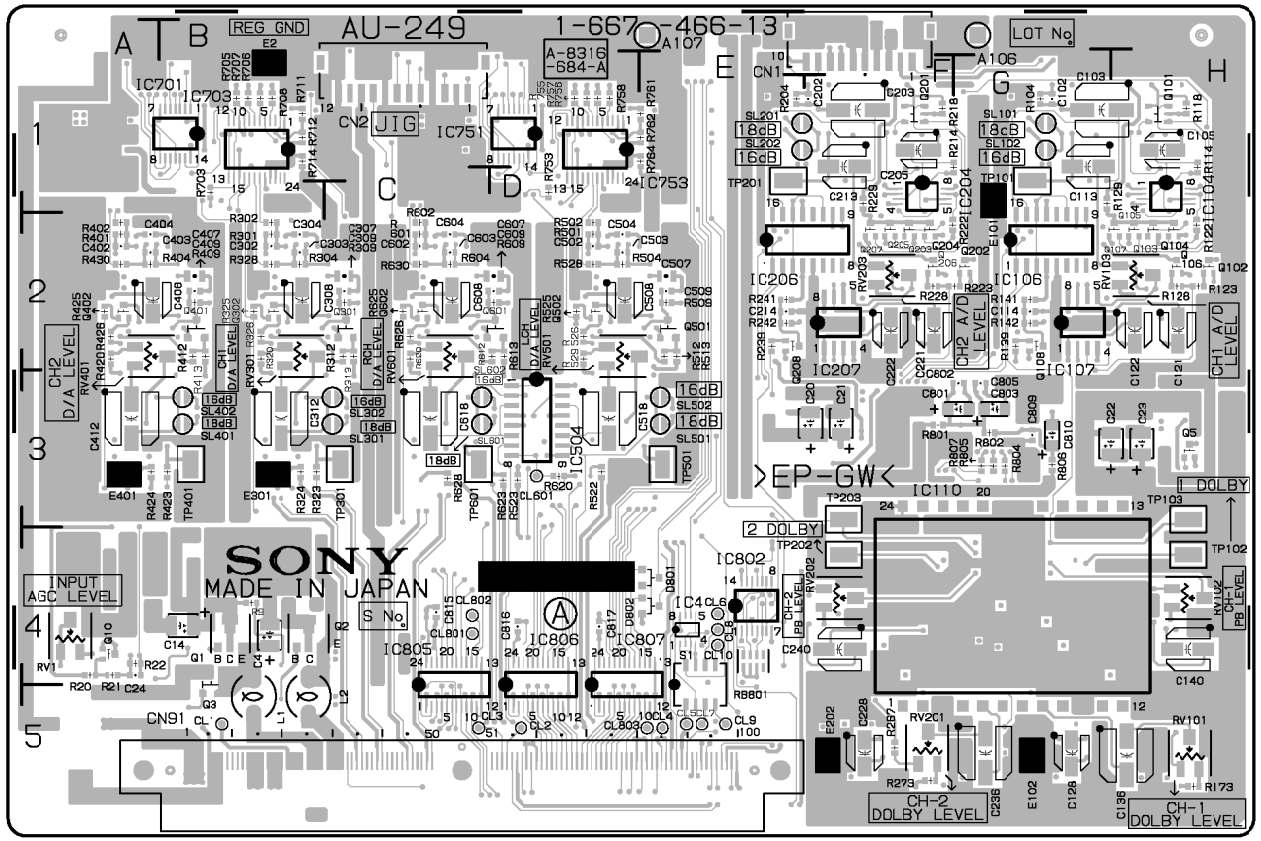

AU-249 -A SIDE-
SUFFIX: -13

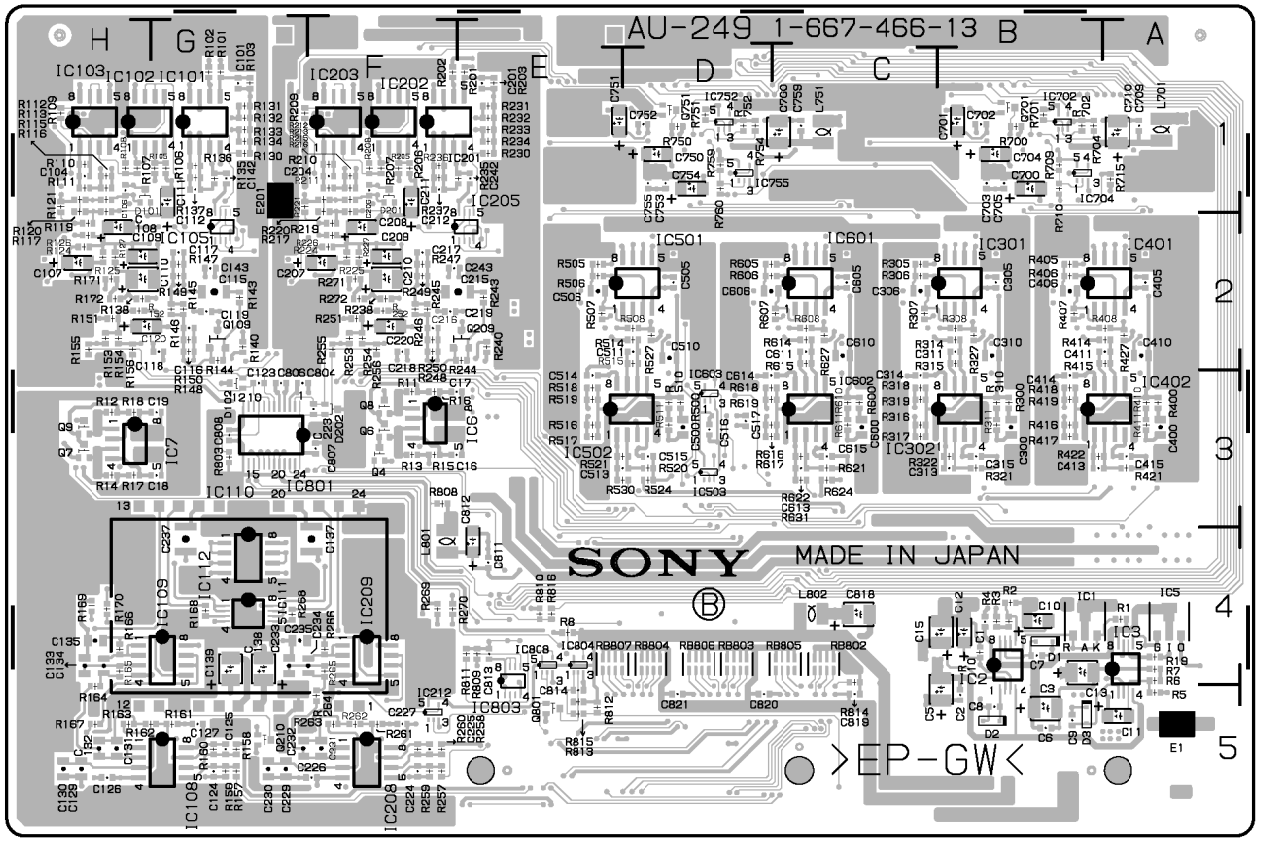

AU-249 -B SIDE-
SUFFIX: -13

R102	*G1	R222	F2	R414	*A2	R752	*D1
R103	*G1	R223	G2	R415	*A2	R753	D1
R104	G1	R224	*F2	R416	*B3	R754	*D1
R105	*G1	R225	*F2	R417	*B3	R755	D1
R106	*G1	R226	*F2	R418	*B3	R756	D1
R107	*H1	R227	*F2	R419	*B3	R757	D1
R108	*H1	R228	F2	R420	A2	R758	D1
R109	*H1	R229	F1	R421	*A3	R759	*D1
R110	*H1	R230	*E1	R422	*B3	R760	*D1
R111	*H1	R231	*E1	R423	B3	R761	E1
R112	*H1	R232	*E1	R424	A3	R762	E1
R113	*H1	R233	*E1	R425	A2	R764	E1
R114	H1	R234	*E1	R426	A2	R801	F3
R115	*H1	R235	*E1	R427	*A2	R802	G3
R116	*H1	R236	*F1	R430	A2	R803	*G3
R117	*H1	R237	*F1	R500	*D3	R804	G3
R118	H1	R238	*F2	R501	D2	R805	G3
R119	*H2	R239	E2	R502	D2	R806	G3
R120	*H1	R240	*E2	R504	D2	R807	G3
R121	*H1	R241	E2	R505	*E2	R808	*F3
R122	H2	R242	E2	R506	*E2	R809	*E4
R123	H2	R243	*E2	R507	*E2	R810	*E4
R124	*H2	R244	*E2	R508	*D2	R811	*E4
R125	*H2	R245	*F2	R509	E2	R812	*E5
R126	*H2	R246	*F2	R510	*D3	R813	*E5
R127	*H2	R247	*F2	R511	*D3	R814	*C4
R128	H2	R248	*F2	R512	E2	R815	*E5
R129	G1	R249	*F2	R513	E2	R816	*E4
R130	*G1	R250	*F2	R514	*D2		
R131	*G1	R251	*F2	R515	*D2	RB801	E4
R132	*G1	R252	*F2	R516	*E3	RB802	*C4
R133	*G1	R253	*F2	R517	*E3	RB803	*D4
R134	*G1	R254	*F2	R518	*E3	RB804	*D4
R135	*G1	R255	*F2	R519	*E3	RB805	*C4
R136	*G1	R256	*F2	R520	*D3	RB806	*D4
R137	*G1	R257	*F5	R521	*E3	RB807	*E4
R138	*H2	R258	*F5	R522	D3		
R139	G2	R259	*F5	R523	D3	RV1	A4
R140	*G2	R260	*F5	R524	*D3	RV101	H5
R141	G2	R261	*F5	R525	D2	RV102	H4
R142	G2	R262	*F5	R526	D2	RV103	H2
R143	*G2	R263	*F5	R527	*D2	RV201	F5
R144	*G2	R264	*F5	R528	D2	RV202	F4
R145	*G2	R265	*F4	R529	D2	RV203	F2
R146	*G2	R266	*F4	R530	*E3	RV301	B2
R147	*G2	R267	F5	R600	*C3	RV401	A2
R148	*G2	R268	*G4	R601	C2	RV501	D2
R149	*G2	R269	*F4	R602	C2	RV601	C2
R150	*G2	R270	*F4	R604	C2		
R151	*H2	R271	*F2	R605	*D2	S1	E4
R152	*H2	R272	*F2	R606	*D2		
R153	*H2	R273	F5	R607	*C2	SL101	G1
R154	*H2	R300	*B3	R608	*C2	SL102	G1
R155	*H2	R301	B2	R609	D2	SL201	E1
R156	*H2	R302	B2	R610	*C3	SL202	E1
R157	*G5	R304	B2	R611	*C3	SL301	C3
R158	*G5	R305	*C2	R612	D2	SL302	C3
R159	*G5	R306	*C2	R613	D2	SL401	B3
R160	*G5	R307	C2	R614	*C2	SL402	B3
R161	*G5	R308	*B2	R615	*C2	SL501	E3
R162	*H5	R309	C2	R616	*D3	SL502	E3
R163	*H5	R310	*B3	R617	*D3	SL601	C3
R164	*H5	R311	*B3	R618	*D3	SL602	C3
R165	*H4	R312	C2	R619	*D3		
R166	*H4	R313	C2	R620	D3	TP101	G1
R167	*H5	R314	*B2	R621	*C3	TP102	H4
R168	*G4	R315	*B2	R622	*C3	TP103	H3
R169	*H4	R316	*C3	R623	D3	TP201	E1
R170	*H4	R317	*C3	R624	*C3	TP202	F4
R171	*H2	R318	*C3	R625	C2	TP203	F3
R172	*H2	R319	*C3	R626	C2	TP301	C3
R173	H5	R320	B2	R627	*C2	TP401	B3
R201	*E1	R321	*B3	R628	C3	TP501	E3
R202	*E1	R322	*B3	R629	C2	TP601	C3
R203	*E1	R323	B3	R630	C2		
R204	E1	R324	B3	R631	*C3	*:B SIDE	
R205	*F1	R325	B2	R700	*B1		
R206	*F1	R326	B2	R701	*B1		
R207	*F1	R327	*B2	R702	*B1		
R208	*F1	R328	B2	R703	B1		
R209	*G1	R400	*A3	R704	*B1		
R210	*F1	R401	A2	R705	B1		
R211	*F1	R402	A2	R706	B1		
R212	*F1	R404	A2	R707	B1		
R213	*F1	R405	*B2	R708	B1		
R214	G1	R406	*B2	R709	*B1		
R215	*F1	R407	*B2	R710	*B1		
R216	*F1	R408	*A2	R711	B1		
R217	*F1	R409	B2	R712	B1		
R218	F1	R410	*A3	R714	B1		
R219	*F2	R411	*A3	R715	*A1		
R220	*F1	R412	B2	R750	*D1		
R221	*G1	R413	B2	R751	*D1		

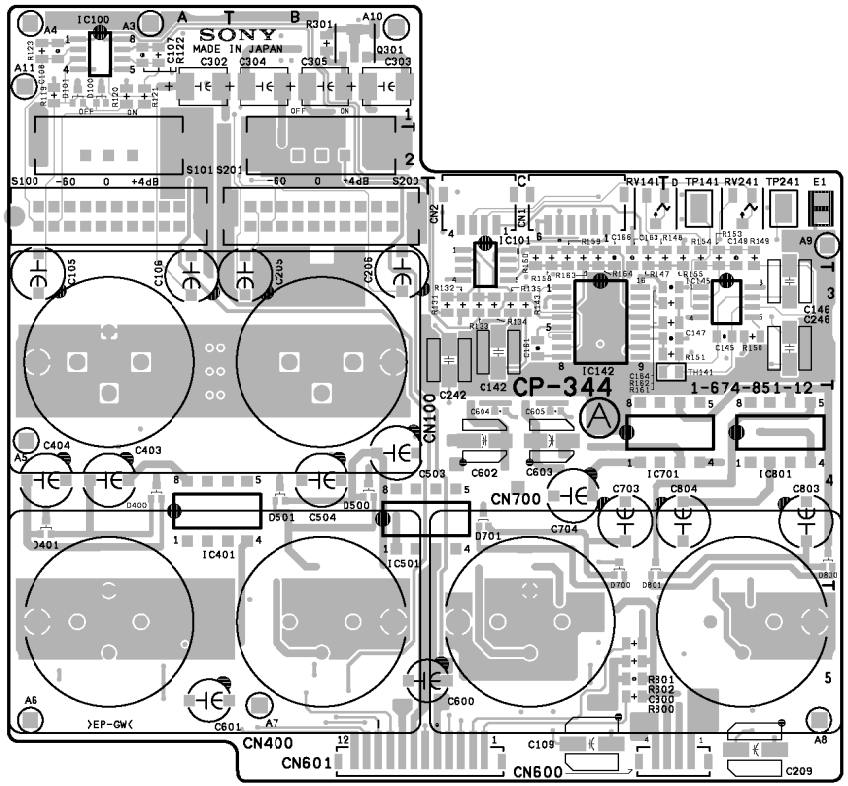

CP-344/344A -A SIDE-
SUFFIX: -12

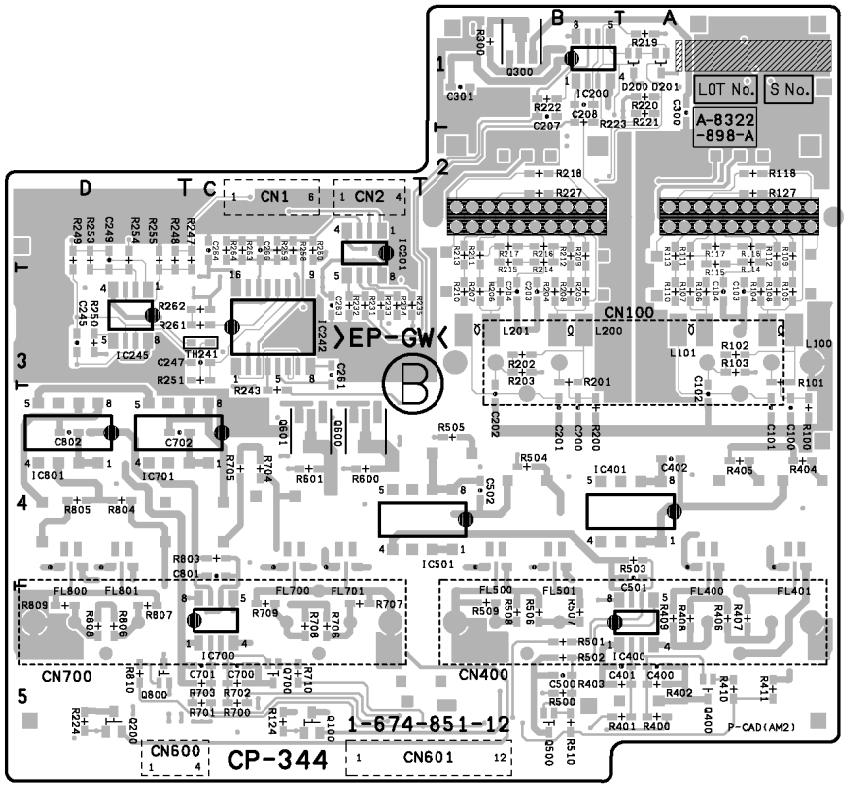

CP-344/344A -B SIDE-
SUFFIX: -12

CP-344/344A(1-674-851-12)

C100	*A4	C203	*B3	C400	*A5	C801	*C4	D701	C4	IC245	*D3	Q800	*D5	R120	A1	R160	C2	R217	*B2	R255	*D2	R500	*B5	R709	*C5	TH141	D3
C101	*A4	C204	*B3	C401	*A5	C802	*D4	D800	D4	IC400	*A5			R121	A1	R161	D3	R218	*B2	R258	*C2	R501	*B5	R710	*C5	TH241	*C3
C102	*A4	C205	B3	C402	*A4	C803	D4	D801	C4	IC401	A4	R100	*A4	R122	A1	R162	D3	R219	*A1	R259	*C2	R502	*B5	R800	C5		
C103	*A3	C206	B3	C403	A4	C804	D4			IC501	B4	R101	*A3	R123	A1	R163	C2	R220	*A1	R260	*C2	R503	*A4	R801	C5	TP141	D2
C104	*A3	C207	*B1	C404	A4			E1	D2	IC700	*C5	R102	*A3	R124	*C5	R164	C2	R221	*A1	R261	*C3	R504	*B4	R802	C5	TP241	D2
C105	A3	C208	*B1	C500	*B5	CN1	C2			IC701	C4	R103	*A3	R127	*A2	R200	*B4	R222	*B1	R262	*C3	R505	*B4	R803	*C4		
C106	A3	C209	D5	C501	*A4	CN2	C2	FL400	*A4	IC801	D4	R104	*A3	R131	C3	R201	*B3	R223	*B1	R263	*C2	R506	*B5	R804	*D4	*:B SIDE	
C107	A1	C242	C3	C502	*B4	CN100	A3	FL401	*A4			R105	*A3	R132	C3	R202	*B3	R224	*D5	R264	*C2	R507	*B5	R805	*D4		
C108	A1	C245	*D3	C503	B4	CN400	A5	FL500	*B4	L100	*A3	R106	*A3	R133	C3	R203	*B3	R227	*B2	R300	*B1	R508	*B5	R806	*D5		
C109	C5	C246	D3	C504	B4	CN600	D5	FL501	*B4	L101	*A3	R107	*A3	R134	C3	R204	*B3	R231	*C3	R301	B1	R509	*B5	R807	*D5		
C142	C3	C247	*C3	C600	B5	CN601	B5	FL700	*C4	L200	*B3	R108	*A3	R135	C3	R205	*B3	R232	*C3	R400	*A5	R510	*B5	R808	*D5		
C145	D3	C249	*D2	C601	A5	CN700	C5	FL701	*C4	L201	*B3	R109	*A2	R143	C3	R206	*B3	R233	*C3	R401	*A5	R600	*C4	R809	*D5		
C146	D3	C261	*C3	C602	C4			FL800	*D4			R110	*A3	R147	C2	R207	*B3	R234	*C3	R402	*A5	R601	*C4	R810	*D5		
C147	D3	C263	*C3	C603	C4	D100	A1	FL801	*D4	Q100	*C5	R111	*A2	R148	D2	R208	*B3	R235	*C3	R403	*A5	R700	*C5				
C149	D2	C264	*C2	C604	C4	D101	A1			Q200	*D5	R112	*A2	R149	D2	R209	*B2	R243	*C4	R404	*A4	R701	*C5	RV141	C2		
C161	C3	C266	*C2	C605	C4	D200	*A1	IC100	A1	Q300	*B1	R113	*A2	R150	D3	R210	*B3	R247	*C2	R405	*A4	R702	*C5	RV241	D2		
C163	C2	C300	*A1	C700	*C5	D201	*A1	IC101	C2	Q301	B1	R114	*A2	R151	D3	R211	*B2	R248	*D2	R406	*A5	R703	*C5				
C164	D3	C301	*B1	C701	*C5	D400	A4	IC142	C3	Q400	*A5	R115	*A2	R153	D2	R212	*B2	R249	*D2	R407	*A5	R704	*C4	S100	A2		
C166	C2	C302	A1	C702	*D4	D401	A4	IC145	D3	Q500	*B5	R116	*A2	R154	D2	R213	*B2	R250	*D3	R408	*A5	R705	*C4	S101	A2		
C200	*B4	C303	B1	C703	C4	D500	B4	IC200	*B1	Q600	*C4	R117	*A2	R155	D2	R214	*B2	R251	*C3	R409	*A5	R706	*C5	S200	B2		
C201	*B4	C304	B1	C704	C4	D501	B4	IC201	*C2	Q601	*C4	R118	*A2	R158	C2	R215	*B2	R253	*D2	R410	*A5	R707	*C5	S201	B2		
C202	*B4	C305	B1	C800	C5	D700	C4	IC242	*C3	Q700	*C5	R119	A1	R159	C2	R216	*B2	R254	*D2	R411	*A5	R708	*C5				

http://getMANUAL.com

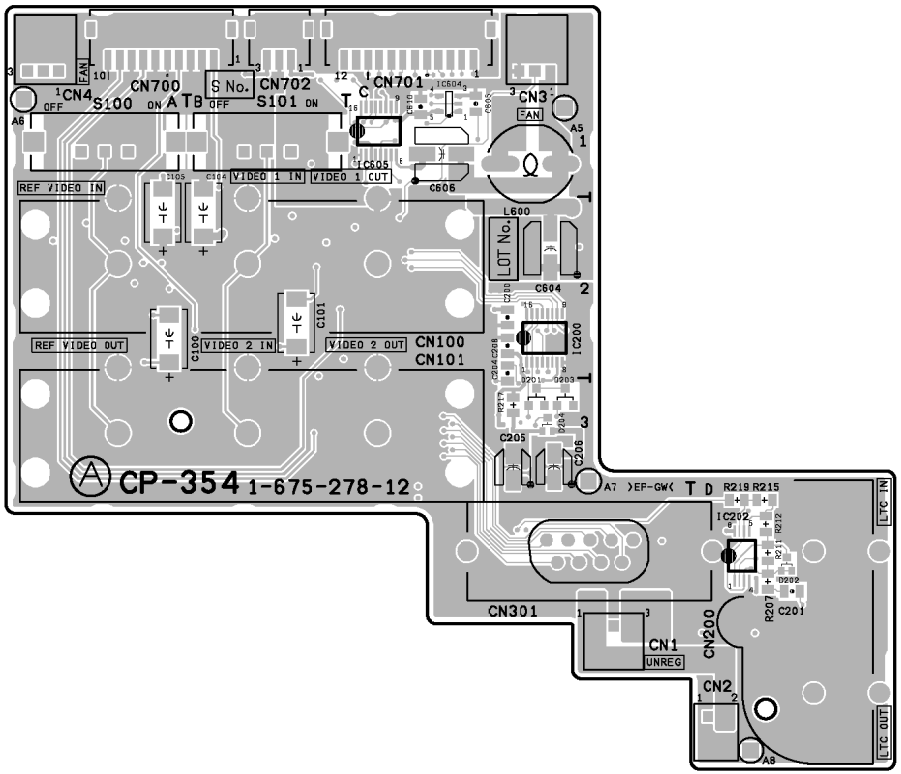

CP-354 -A SIDE-
SUFFIX: -12

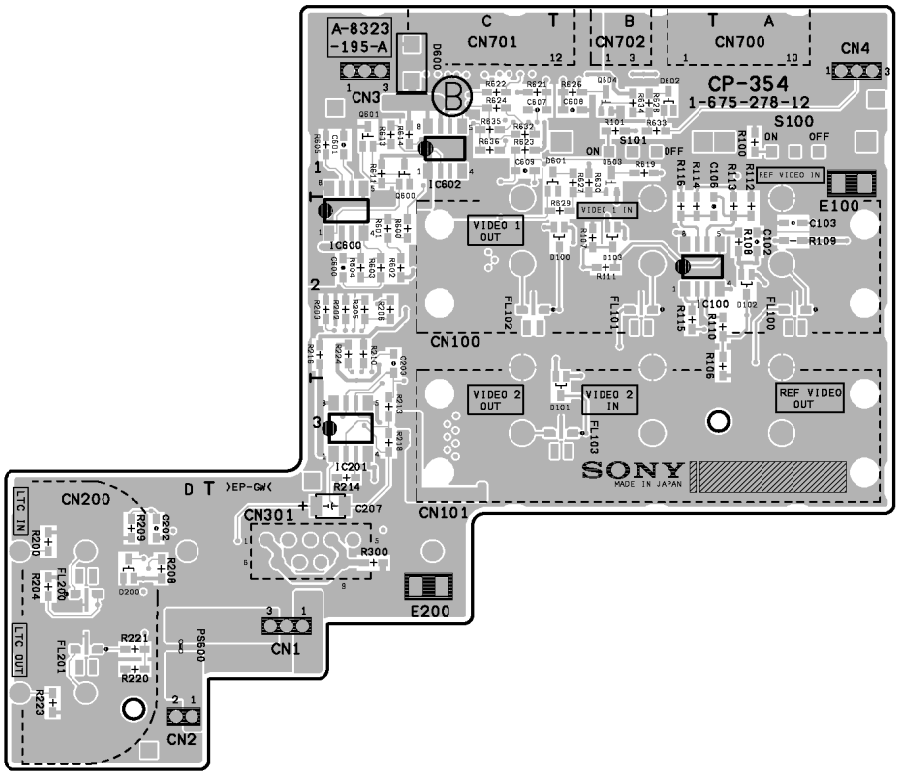

CP-354 -B SIDE-
SUFFIX: -12

CP-354(1-675-278-12)															
C100	A2	C608	*B1	D202	D3	IC602	*C1	R113	*A2	R219	D3	R628	*B1
C101	B2	C609	*C1	D203	C3	IC604	C1	R114	*B2	R220	*D3	R629	*B2
C102	*A2	C610	C1	D204	C3	IC605	C1	R115	*B2	R221	*D3	R630	*B1
C103	*A2			D600	*C1			R116	*B2	R223	*D3	R632	*C1
C104	B2	CN1	C3	D601	*C1	L600	C1	R200	*D3	R224	*C2	R633	*B1
C105	A2	CN2	D3	D602	*B1			R202	*C2	R300	*C3	R634	*B1
C106	*A2	CN3	C1			PS600	*D3	R203	*C2	R600	*C2	R635	*C1
C200	C2	CN4	A1	E100	*A1			R204	*D3	R601	*C2	R636	*C1
C201	D3	CN100	B2	E200	*C3	Q600	*C1	R205	*C2	R602	*C2		
C202	*D3	CN101	B3			Q601	*C1	R206	*C2	R603	*C2	S100	A1
C203	*C2	CN200	D3	FL100	*A2	Q603	*B1	R207	D3	R604	*C2	S101	B1
C204	C2	CN301	C3	FL101	*B2	Q604	*B1	R208	*D3	R605	*C1		
C205	C3	CN700	A1	FL102	*C2			R209	*D3	R611	*C1	*:3 SIDE	
C206	C3	CN701	C1	FL103	*B3	R100	*A1	R210	*C2	R613	*C1		
C207	*C3	CN702	B1	FL200	*D3	R101	*B1	R211	D3	R614	*C1		
C208	C2			FL201	*D3	R106	*A2	R212	D3	R619	*B1		
C600	*C2	D100	*B2			R107	*B2	R213	*C3	R621	*C1		
C601	*C1	D101	*B3	IC100	*B2	R108	*A2	R214	*C3	R622	*C1		
C604	C2	D102	*A2	IC200	C2	R109	*A2	R215	D3	R623	*C1		
C605	C1	D103	*B2	IC201	*C3	R110	*A2	R216	*C2	R624	*C1		
C606	C1	D200	*D3	IC202	D3	R111	*B2	R217	C3	R625	*B1		
C607	*C1	D201	C3	IC600	*C2	R112	*A2	R218	*C3	R627	*B1		

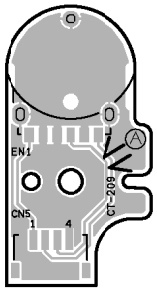

CT-209 -A SIDE-
SUFFIX: -11

CT-209 -B SIDE-
SUFFIX: -11

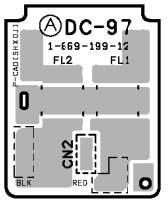

DC-97 -A SIDE-
SUFFIX: -12

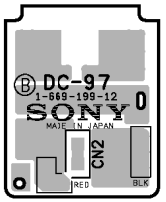

DC-97 -B SIDE-
SUFFIX: -12

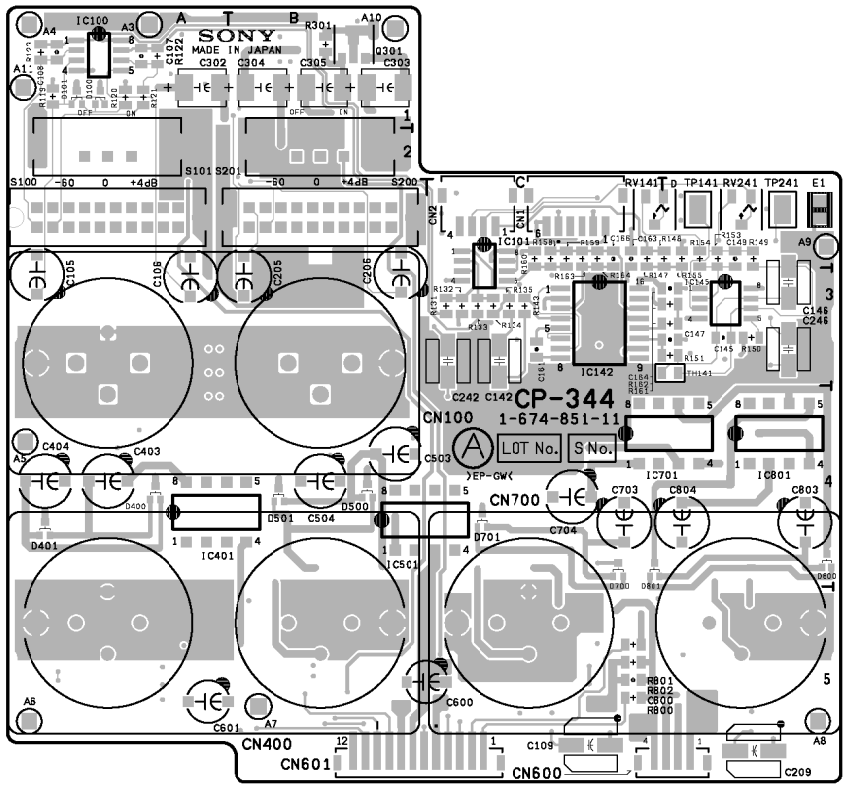

CP-344/344A -A SIDE-
SUFFIX: -11

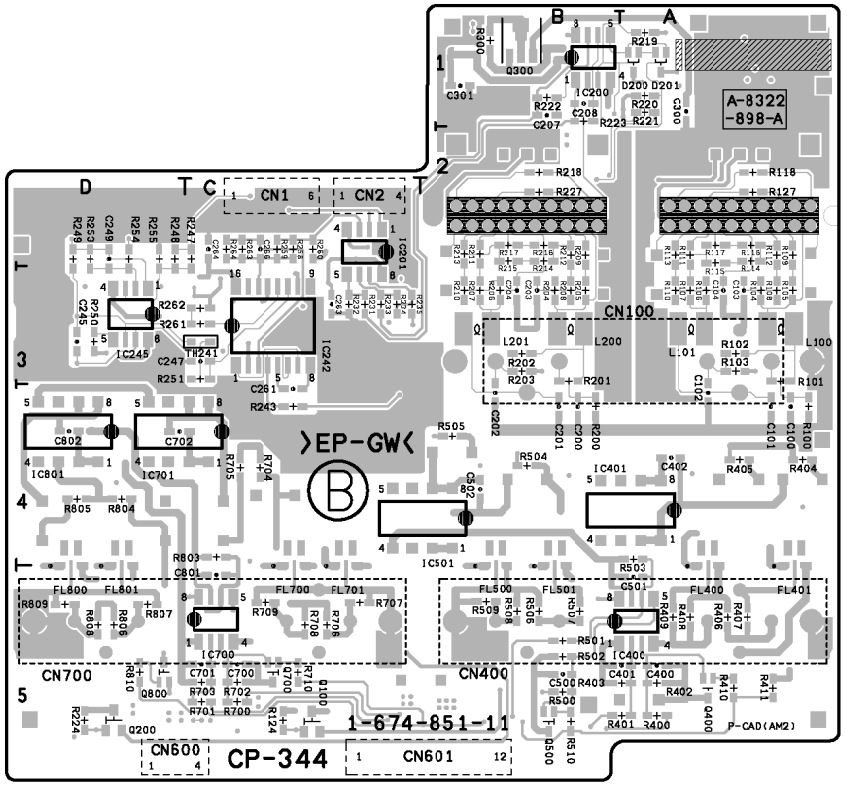

CP-344/344A -B SIDE-
SUFFIX: -11

CP-344/344A(1-674-851-11)

C100	*A3	C203	*B2	C400	*A5	CN1	C2	FL400	*A3	IC801	D3	R106	*A2	R133	C2	R203	*B2	R227	*B2	R300	*B1	R508	*B5	R808	*D5
C101	*A3	C204	*B2	C401	*A5	CN2	C2	FL401	*A3			R107	*A2	R134	C2	R204	*B2	R231	*C2	R301	B1	R509	*B5	R809	*D5
C102	*A3	C205	B2	C402	*A3	CN100	A2	FL500	*B3	L100	*A2	R108	*A2	R135	C2	R205	*B2	R232	*C2	R400	*A5	R510	*B5	R810	*D5
C103	*A2	C206	B2	C403	A3	CN400	A5	FL501	*B3	L101	*A2	R109	*A2	R143	C2	R206	*B2	R233	*C2	R401	*A5	R700	*C5		
C104	*A2	C207	*B1	C404	A3	CN600	D5	FL700	*C3	L200	*B2	R110	*A2	R147	C2	R207	*B2	R234	*C2	R402	*A5	R701	*C5	RV141	C2
C105	A2	C208	*B1	C500	*B5	CN601	B5	FL701	*C3	L201	*B2	R111	*A2	R148	D2	R208	*B2	R235	*C2	R403	*A5	R702	*C5	RV241	D2
C106	A2	C209	D5	C501	*A4	CN700	C5	FL800	*D3			R112	*A2	R149	D2	R209	*B2	R243	*C3	R404	*A3	R703	*C5		
C107	A1	C242	C2	C502	*B3			FL801	*D3	Q100	*C5	R113	*A2	R150	D2	R210	*B2	R247	*C2	R405	*A3	R704	*C3	S100	A2
C108	A1	C245	*D2	C503	B3	D100	A1			Q200	*D5	R114	*A2	R151	D2	R211	*B2	R248	*D2	R406	*A5	R705	*C3	S101	A2
C109	C5	C246	D2	C504	B3	D101	A1	IC100	A1	Q300	*B1	R115	*A2	R153	D2	R212	*B2	R249	*D2	R407	*A5	R706	*C5	S200	B2
C142	C2	C247	*C2	C600	B5	D200	*A1	IC101	C2	Q301	B1	R116	*A2	R154	D2	R213	*B2	R250	*D2	R408	*A5	R707	*C5	S201	B2
C145	D2	C249	*D2	C601	A5	D201	*A1	IC142	C2	Q400	*A5	R117	*A2	R155	D2	R214	*B2	R251	*C2	R409	*A5	R708	*C5		
C146	D2	C261	*C3	C700	*C5	D400	A3	IC145	D2	Q500	*B5	R118	*A2	R158	C2	R215	*B2	R253	*D2	R410	*A5	R709	*C5	TH141	D2
C147	D2	C263	*C2	C701	*C5	D401	A3	IC200	*B1	Q700	*C5	R119	A1	R159	C2	R216	*B2	R254	*D2	R411	*A5	R710	*C5	TH241	*C2
C149	D2	C264	*C2	C702	*D3	D500	B3	IC201	*C2	Q800	*D5	R120	A1	R160	C2	R217	*B2	R255	*D2	R500	*B5	R800	C5		
C161	C2	C266	*C2	C703	C3	D501	B3	IC242	*C2			R121	A1	R161	D2	R218	*B2	R258	*C2	R501	*B5	R801	C5	TP141	D2
C163	C2	C300	*A1	C704	C3	D700	C4	IC245	*D2	R100	*A3	R122	A1	R162	D2	R219	*A1	R259	*C2	R502	*B5	R802	C5	TP241	D2
C164	D2	C301	*B1	C800	C5	D701	C3	IC400	*A5	R101	*A2	R123	A1	R163	C2	R220	*A1	R260	*C2	R503	*A3	R803	*C3		
C166	C2	C302	A1	C801	*C4	D800	D3	IC401	A3	R102	*A2	R124	*C5	R164	C2	R221	*A1	R261	*C2	R504	*B3	R804	*D3	*:B SIDE	
C200	*B3	C303	B1	C802	*D3	D801	C4	IC501	B3	R103	*A2	R127	*A2	R200	*B3	R222	*B1	R262	*C2	R505	*B3	R805	*D3		
C201	*B3	C304	B1	C803	D3			IC700	*C5	R104	*A2	R131	C2	R201	*B2	R223	*B1	R263	*C2	R506	*B5	R806	*D5		
C202	*B3	C305	B1	C804	D3	E1	D2	IC701	C3	R105	*A2	R132	C2	R202	*B2	R224	*D5	R264	*C2	R507	*B5	R807	*D5		

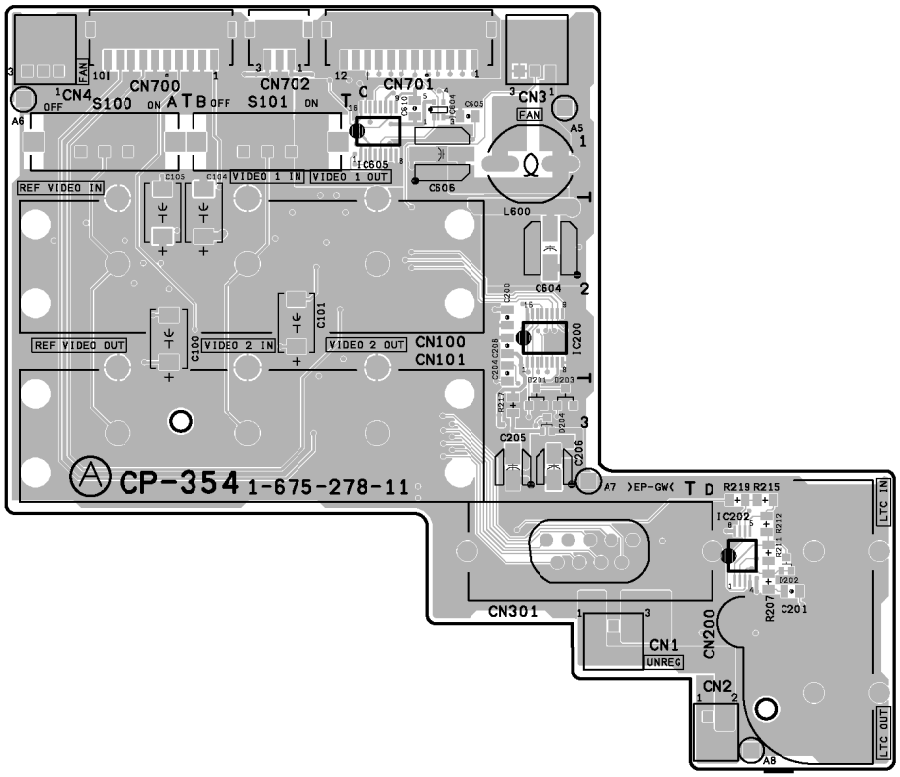

CP-354 -A SIDE-
SUFFIX: -11

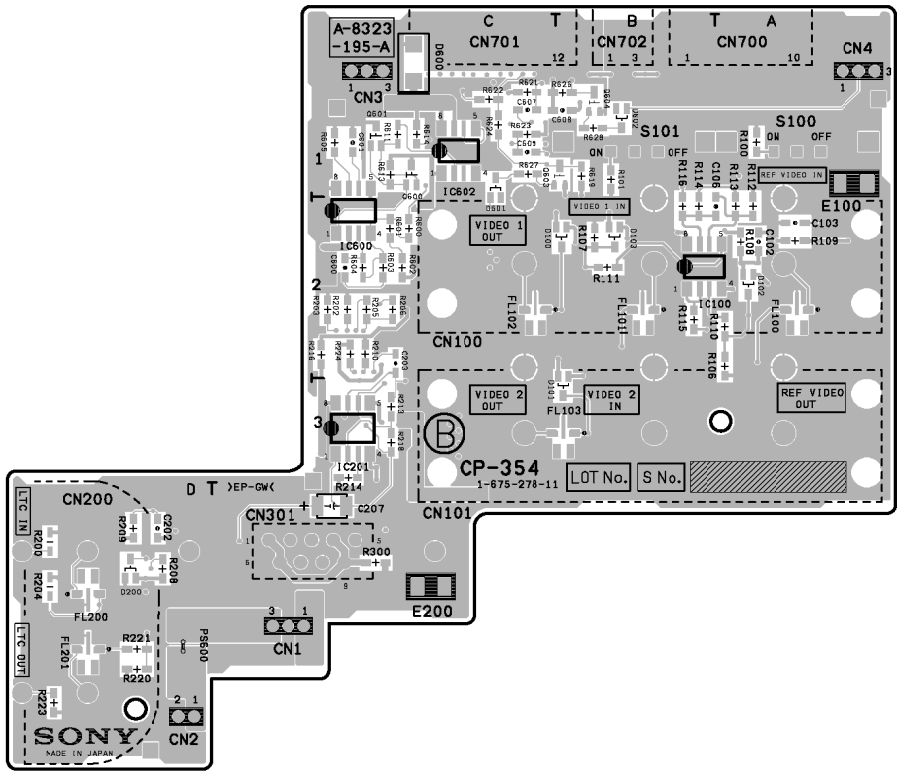

CP-354 -B SIDE-
SUFFIX: -11

CP-354(1-675-278-11)

C100	A2	C608	*B1	D202	D3	IC602	*C1	R113	*A2	R219	D3	R628	*B1		
C101	B2	C609	*C1	D203	C3	IC604	C1	R114	*B2	R220	*D3				
C102	*A2	C610	C1	D204	C3	IC605	C1	R115	*B2	R221	*D3	S100	A1		
C103	*A2			D600	*C1			R116	*B2	R223	*D3	S101	B1		
C104	B2	CN1	C3	D601	*C1	L600	C1	R200	*D3	R224	*C2				
C105	A2	CN2	D3	D602	*B1			R202	*C2	R300	*C3	*:B SIDE			
C106	*A2	CN3	C1			PS600	*D3	R203	*C2	R600	*C2				
C200	C2	CN4	A1	E100	*A1			R204	*D3	R601	*C2				
C201	D3	CN100	B2	E200	*C3	Q600	*C1	R205	*C2	R602	*C2				
C202	*D3	CN101	B3			Q601	*C1	R206	*C2	R603	*C2				
C203	*C2	CN200	D3	FL100	*A2	Q603	*B1	R207	D3	R604	*C2				
C204	C2	CN301	C3	FL101	*B2	Q604	*B1	R208	*D3	R605	*C1				
C205	C3	CN700	A1	FL102	*C2			R209	*D3	R611	*C1				
C206	C3	CN701	C1	FL103	*B3	R100	*A1	R210	*C2	R613	*C1				
C207	*C3	CN702	B1	FL200	*D3	R101	*B1	R211	D3	R614	*C1				
C208	C2			FL201	*D3	R106	*A2	R212	D3	R619	*B1				
C600	*C2	D100	*B2			R107	*B2	R213	*C3	R621	*C1				
C601	*C1	D101	*B3	IC100	*B2	R108	*A2	R214	*C3	R622	*C1				
C604	C2	D102	*A2	IC200	C2	R109	*A2	R215	D3	R623	*C1				
C605	C1	D103	*B2	IC201	*C3	R110	*A2	R216	*C2	R624	*C1				
C606	C1	D200	*D3	IC202	D3	R111	*B2	R217	C3	R626	*B1				
C607	*C1	D201	C3	IC500	*C2	R112	*A2	R218	*C3	R627	*C1				

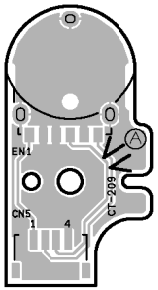

CT-209 -A SIDE-
SUFFIX: -11

CT-209 -B SIDE-
SUFFIX: -11

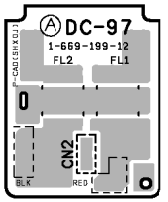

DC-97 -A SIDE-
SUFFIX: -12

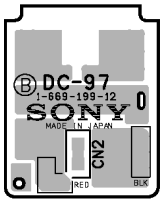

DC-97 -B SIDE-
SUFFIX: -12

DEC-97(1-667-471-13)

C1	*H4	C93	*G2	CL13	E4	IC57	*G4
C2	*H4	C94	*G2	CL14	E4	IC58	G4
C3	*J4	C95	*F2	CL15	E4	IC59	*C3
C4	*J4	C96	*H1	CL16	E4		
C5	J4	C97	G2	CL17	F3	L1	*H4
C6	J4	C98	*G1	CL18	F3	L2	H3
C7	*J2	C99	*F1	CL19	F3	L3	B4
C8	J2	C100	G1	CL20	F3	L4	B4
C9	J1	C101	*G1	CL21	*D3	L5	A4
C10	J2	C102	*G1	CL22	*D3	L6	A4
C11	*J1	C103	*H1	CL23	*D3	L7	A4
C12	*J1	C104	*H1	CL24	*D3	L8	C3
C13	*J2	C105	*G1	CL25	*D3	L9	G2
C14	*J1	C106	*G1	CL26	*D3		
C15	H1	C107	*H1	CL27	*D3	Q1	*J4
C16	E4	C108	*H1	CL28	*D3	Q2	*J4
C17	*G4	C109	*F1			Q3	*J4
C18	*G4	C110	*D1	CN71	D4	Q4	J2
C19	*H1	C111	G1	CN72	H4	Q5	*J2
C20	*H1	C112	*F2			Q6	*J2
C21	*J1	C113	*C3	CP1	E2	Q7	*J1
C22	*H1	C118	B3	CP2	E2	Q8	*J1
C23	*H1	C119	*C2			Q9	*J1
C24	*J1	C120	B3	D2	H2	Q10	*H4
C25	H2	C121	*D3	D3	F2	Q11	H3
C26	H2	C122	*D2	D4	*D2	Q12	*G3
C27	*D4	C123	*F3			Q13	*H3
C28	J4	C126	*D2	E2	H4	Q14	*H2
C29	J4	C129	*D2	E3	F3	Q15	G3
C30	*G4	C130	*D2	E4	B1	Q16	*G1
C31	*J4	C131	*D2	E5	G2	Q17	*H1
C32	*H4	C132	*D2			Q18	*B2
C33	*H4	C133	*D2	FB1	F2	Q19	*J1
C34	G4	C134	*E2			Q20	*J1
C35	*G4	C135	*F2	FL1	J3	Q21	G4
C36	H4	C136	*F2			Q22	*F2
C37	J2	C137	*E2	IC1	J2	Q23	*B3
C38	J2	C138	*E2	IC2	E2	Q24	*B3
C39	H2	C139	*F2	IC3	J1	Q25	*A3
C40	H2	C140	*B2	IC4	H1	Q26	*B3
C41	J2	C141	*B2	IC5	H2	Q27	F2
C42	H2	C142	*B2	IC6	J4	Q28	*A3
C43	J1	C143	*B2	IC7	E3	Q29	B4
C44	J1	C144	*B1	IC8	H2	Q30	A4
C45	*H3	C145	*A1	IC9	H1	Q31	*C3
C46	*H2	C146	*A1	IC10	H2		
C47	*J2	C147	*A1	IC11	J1	R1	*J4
C48	*J2	C148	*F4	IC12	*J3	R2	*J4
C49	*H2	C149	*F4	IC13	*H2	R3	*H2
C50	*H4	C150	*E4	IC14	*J1	R4	*J4
C51	H3	C156	*F2	IC15	H4	R5	*H2
C52	H3	C157	J1	IC16	*H4	R6	*J4
C53	H3	C158	J2	IC17	H4	R7	J4
C54	H3	C159	*J3	IC18	*G3	R8	J4
C55	H3	C160	*H4	IC19	H3	R9	J4
C56	H3	C161	*B1	IC20	*H3	R10	J2
C57	H4	C162	*B3	IC21	*J3	R11	*J2
C58	H4	C163	*B3	IC22	*J2	R12	J2
C59	H4	C164	*B3	IC23	*H2	R13	*J2
C60	H4	C165	*A3	IC24	H2	R14	J2
C61	*H4	C166	*B3	IC25	F3	R15	J2
C62	*H3	C167	*B3	IC26	F3	R16	*J1
C63	*J3	C168	*A3	IC27	E3	R17	J2
C64	H3	C169	*B3	IC28	E3	R18	J2
C65	H4	C171	*A3	IC29	B2	R19	*J2
C66	H3	C172	*A3	IC30	E3	R20	*J1
C67	*H3	C173	*E2	IC31	*G4	R21	J1
C68	*G3	C174	*B4	IC32	C4	R22	*J1
C69	*H3	C175	*B4	IC33	D4	R23	J1
C70	*G3	C176	*B4	IC34	C4	R24	J1
C71	*J3	C177	*B4	IC35	B4	R25	*J1
C72	*J3	C178	*A4	IC36	*H2	R26	*J1
C73	*H3	C179	*A4	IC37	G1	R27	*J1
C74	G2	C180	*A4	IC38	F2	R28	*J1
C75	*H2	C181	*A4	IC39	F2	R29	*H1
C76	*H2	C182	*A4	IC40	H1	R30	*H1
C77	*H2	C183	*A4	IC41	F1	R31	*H1
C78	H2	C184	F2	IC42	D1	R32	*H1
C79	H2	C185	E2	IC43	C2	R33	*E3
C80	*F2			IC44	*F2	R34	*E3
C81	*F3	CL1	B4	IC45	*D2	R35	J4
C82	*F2	CL2	*D4	IC46	F2	R36	J4
C83	*E2	CL3	*D4	IC47	A2	R37	*J1
C84	*E2	CL4	*D4	IC48	A1	R38	J4
C85	*E3	CL5	*D4	IC49	E3	R39	*D4
C86	*H2	CL6	*D4	IC50	F4	R40	*D2
C87	*C3	CL7	*D4	IC51	B4	R41	*D3
C88	*C4	CL8	*E4	IC52	B3	R42	*J4
C89	*C4	CL9	*D4	IC53	B3	R43	*H4
C90	*D3	CL10	*E4	IC54	E2	R44	J2
C91	*C3	CL11	*D4	IC55	E3	R45	H2
C92	*C3	CL12	*E4	IC56	A3	R46	J1

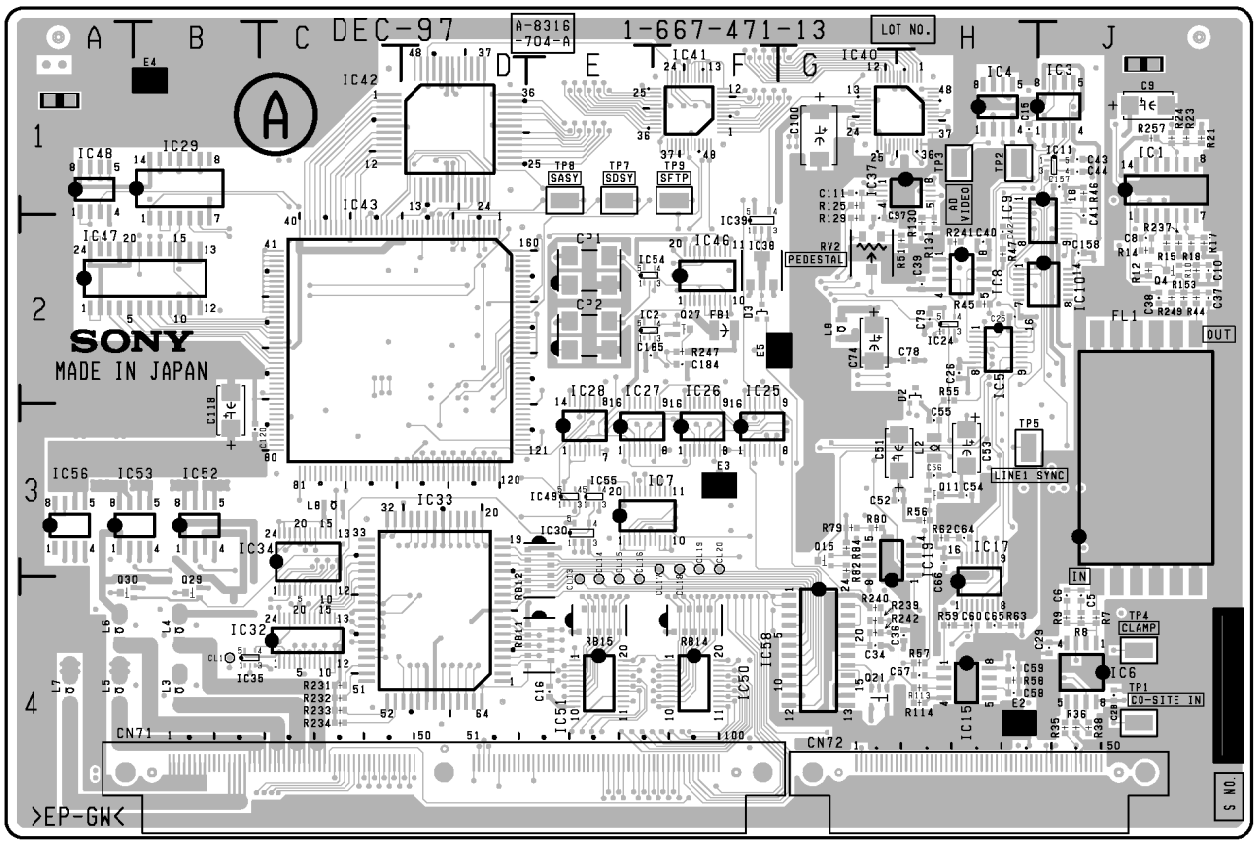

DEC-97 -A SIDE-
SUFFIX: -13

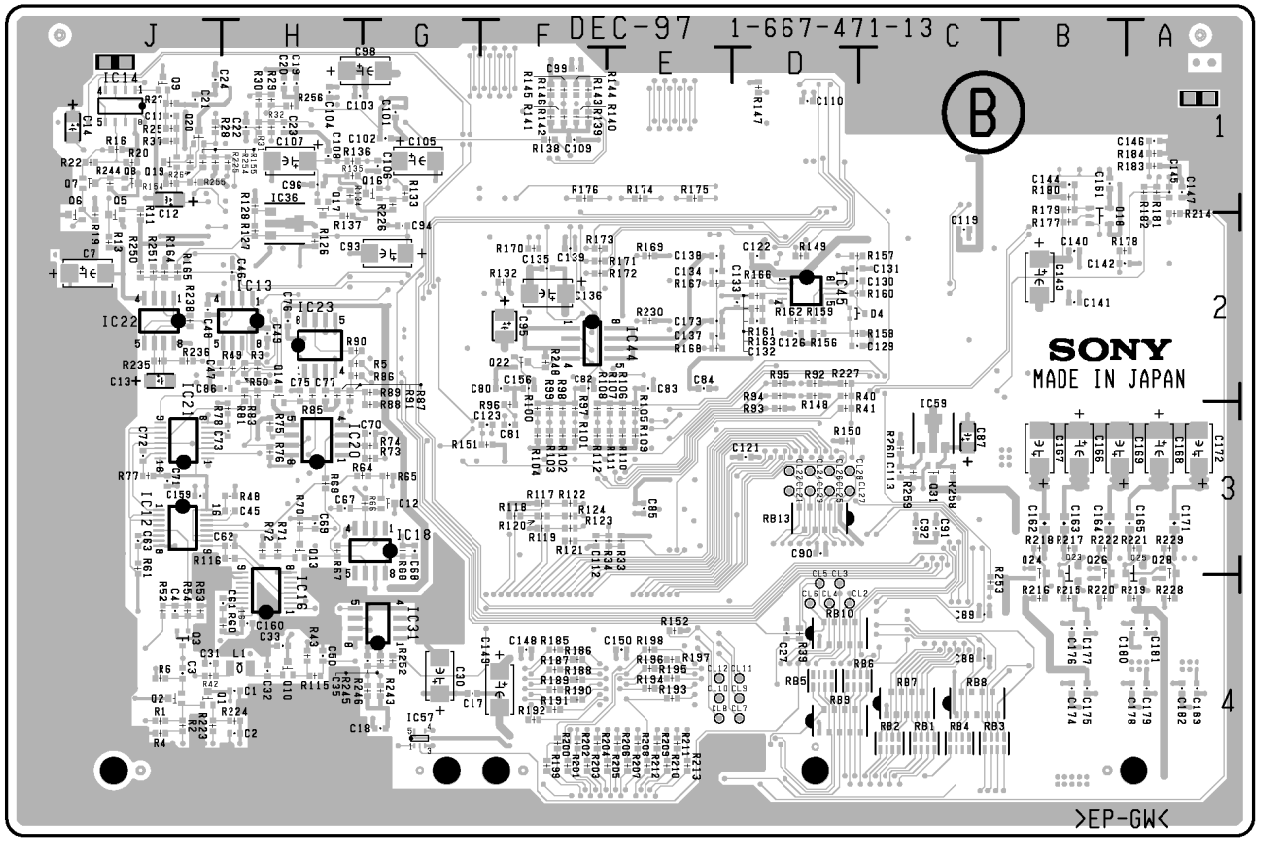

DEC-97 -B SIDE-
SUFFIX: -13

R47	H2	R139	*F1	R231	C4
R48	*H3	R140	*F1	R232	C4
R49	*H2	R141	*F1	R233	C4
R50	*H2	R142	*F1	R234	C4
R51	H2	R143	*F1	R235	*J2
R52	*J4	R144	*F1	R236	*J2
R53	*J4	R145	*F1	R237	J2
R54	*J4	R146	*F1	R238	*J2
R55	H2	R147	*D1	R239	G4
R56	H3	R148	*D2	R240	G4
R57	H4	R149	*D2	R241	H2
R58	H4	R150	*D3	R242	G4
R59	H4	R151	*F3	R243	*G4
R60	*H4	R152	*E4	R244	*J1
R61	*J3	R153	J2	R245	*G4
R62	H3	R154	*J1	R246	*G4
R63	H4	R155	*J1	R247	F2
R64	*H3	R156	*D2	R248	*F2
R65	*G3	R157	*J2	R249	J2
R66	*G3	R158	*D2	R250	*J2
R67	*H3	R159	*D2	R251	*J2
R68	*G3	R150	*D2	R252	*G4
R69	*H3	R151	*D2	R253	*C4
R70	*H3	R152	*D2	R254	*J1
R71	*H3	R153	*D2	R255	*J1
R72	*H3	R154	*J2	R256	*H1
R73	*G3	R155	*J2	R257	J1
R74	*G3	R156	*D2	R258	*C3
R75	*H3	R157	*E2	R259	*C3
R76	*H3	R158	*E2	R260	*C3
R77	*J3	R159	*E2		
R78	*H3	R170	*F2	RB1	*C4
R79	G3	R171	*F2	RB2	*C4
R80	G3	R172	*F2	RB3	*C4
R81	*H2	R173	*F2	RB4	*C4
R82	G3	R174	*E1	RB5	*D4
R83	*H2	R175	*E1	RB6	*D4
R84	G3	R176	*F1	RB7	*C4
R85	*H2	R177	*B2	RB8	*C4
R86	*H2	R178	*B2	RB9	*D4
R87	*H2	R179	*B1	RB10	*D4
R88	*G3	R130	*B1	RB11	E4
R89	*G2	R131	*A1	RB12	E3
R90	*H2	R132	*A1	RB13	*D3
R91	*H2	R133	*A1	RB14	F4
R92	*D2	R134	*A1	RB15	E4
R93	*D3	R135	*F4		
R94	*D2	R136	*F4	RV2	G2
R95	*D2	R137	*F4		
R96	*F3	R138	*F4	TP1	J4
R97	*F3	R139	*F4	TP2	H1
R98	*F3	R190	*F4	TP3	H1
R99	*F3	R191	*F4	TP4	J4
R100	*F3	R192	*F4	TP5	H3
R101	*F3	R193	*E4	TP7	E1
R102	*F3	R194	*E4	TP8	E1
R103	*F3	R195	*E4	TP9	F1
R104	*F3	R196	*E4		
R105	*E3	R197	*E4	*:B SIDE	
R106	*E3	R198	*E4		
R107	*E3	R199	*F4		
R108	*F3	R200	*F4		
R109	*E3	R201	*F4		
R110	*E3	R202	*F4		
R111	*E3	R203	*F4		
R112	*F3	R204	*F4		
R113	H4	R205	*E4		
R114	H4	R206	*E4		
R115	*H4	R207	*E4		
R116	*H3	R208	*E4		
R117	*F3	R209	*E4		
R118	*F3	R210	*E4		
R119	*F3	R211	*E4		
R120	*F3	R212	*E4		
R121	*F3	R213	*E4		
R122	*F3	R214	*A2		
R123	*F3	R215	*B4		
R124	*F3	R216	*B4		
R125	G1	R217	*B3		
R126	*H2	R218	*B3		
R127	*H2	R219	*A4		
R128	*H1	R220	*B4		
R129	G2	R221	*A3		
R130	H2	R222	*B3		
R131	H2	R223	*J4		
R132	*F2	R224	*H4		
R133	*G1	R225	*H1		
R134	*H1	R226	*G1		
R135	*H1	R227	*D2		
R136	*H1	R228	*A4		
R137	*H2	R229	*A3		
R138	*F1	R230	*E2		

DM-114/114P(1-667-547-13)

C101	*P4	C194	*P4	C384	*P6	C717	*K6	C962	H7	C1305	*F3	C1501	G5	C1657	*F7	C1838	*C7	D1402	*G2	IC510	*J4	IC1706	*D4	L501	L1	Q:19	*P2	Q721	*J6	R114	*P3	R206	*M2	R322	*P5
C102	*P4	C195	P4	C385	P6	C718	K7	C963	J7	C1306	*F3	C1502	G4	C1658	*F5	C1839	*C5	D1405	*F2	IC511	*J3	IC1707	E4	L502	L2	Q:20	*N2	Q722	*J6	R115	*P3	R207	*P2	R323	*P5
C103	*P3	C196	P4	C386	N7	C719	*K6	C964	*A7	C1307	E3	C1503	*G5	C1659	*G5	C1840	C5	D1406	*F2	IC512	K1	IC1708	*D5	L503	*L3	Q:21	*P2	Q723	*J6	R116	*P3	R208	*N2	R324	N6
C104	P3	C197	*L3	C387	P7	C720	K7	C965	*A7	C1308	F3	C1504	*G4	C1660	*F7	C1841	*C5	D1501	*G6	IC513	K2	IC1709	D4	L504	*L3	Q:22	M2	Q901	*M4	R117	*P3	R209	*P2	R325	N6
C105	*P3	C198	N4	C388	N6	C721	K6	C1101	H4	C1309	*F3	C1505	*G5	C1661	F6	C1842	*C7	D1502	E5	IC701	L6	IC1710	D4	L505	K1	Q:23	*P2	Q902	*L7	R118	N3	R210	*N2	R326	N6
C106	*P3	C199	N4	C389	*N6	C722	*K5	C1102	*J4	C1310	*F3	C1506	G5	C1662	F6	C1843	B5	D1601	*F5	IC702	*L5	IC1711	D4	L506	*K2	Q:24	*N2	Q903	*M7	R119	N3	R211	N2	R327	N6
C107	*N2	C200	P4	C501	L1	C723	L6	C1103	H3	C1311	*E3	C1507	*G5	C1663	*P6	C1844	B5	D1602	*F6	IC703	K5	IC1712	*D6	L507	K2	Q:25	M2	Q904	*M7	R120	*P3	R212	N2	R328	*P5
C108	*N2	C201	L3	C502	*M1	C724	*L6	C1104	H4	C1312	*E3	C1508	*F4	C1664	*P6	C1845	*B5	D1603	*F6	IC704	*K6	IC1713	D3	L508	J2	Q:26	*P2	Q905	*H1	R121	*P3	R213	N2	R329	*P5
C109	*N2	C203	N4	C503	M1	C725	*K6	C1105	H4	C1313	F3	C1509	*F5	C1665	*P6	C1846	*C5	D1604	*F6	IC705	*J5	IC1714	D6	L509	K4	Q:27	*N2	Q906	*J1	R122	*P3	R214	N2	R330	*P6
C110	*N2	C204	*N4	C505	*M1	C726	L6	C1106	*H4	C1314	*F3	C1510	*F5	C1666	F7	C1847	*B5	D1701	*D3	IC706	J7	IC1715	E7	L510	J2	Q:28	*M2	Q907	*H7	R123	N3	R215	*N3	R331	*P6
C111	*N2	C301	*P6	C506	*M1	C727	*K6	C1107	J3	C1315	*F3	C1511	*F5	C1667	E4	C1848	*B5	D1702	*D3	IC710	L5	IC1716	C4	L511	J1	Q:29	*P2	Q908	*J7	R124	N3	R216	*N3	R332	N6
C112	*N1	C302	*P6	C507	*M1	C728	*L6	C1108	*H2	C1316	*F3	C1512	*F5	C1701	*D1	C1849	*C3	D1703	*D3	IC901	N4	IC1717	*E1	L512	J1	Q:30	*N2	Q909	*A6	R125	*N2	R217	N3	R333	P6
C113	*N1	C303	*P6	C508	*M1	C729	J6	C1109	*J3	C1317	*F3	C1513	*F5	C1702	*D4	C1850	*C5	D1704	*D3	IC902	N4	IC1800	*B7	L513	L2	Q:31	*N3	Q910	*A7	R126	*N2	R218	*N3	R334	*P5
C114	*P3	C304	*P7	C509	*M2	C730	J6	C1110	*H2	C1318	*E1	C1514	*F4	C1703	*D2	C1851	*C5	D1705	D7	IC903	N5	IC1801	B6	L514	L5	Q:32	N2	Q911	*H1	R127	*N2	R219	*N3	R335	*N5
C115	*P3	C305	*P7	C510	*L3	C731	*K5	C1111	*H3	C1319	E1	C1515	*F4	C1704	*D5	C1852	C5	D1801	*C6	IC904	M5	IC1802	B2	L701	L5	Q:33	*N3	Q912	*J1	R128	*N2	R220	*N3	R336	*P5
C116	*N1	C306	*P7	C511	*M1	C732	*J5	C1112	*J2	C1320	*E1	C1516	*F4	C1705	*D2	C1853	*C5	D1802	*C7	IC905	M4	IC1803	*C7	L702	*K7	Q:34	*N4	Q913	*H7	R129	*N2	R221	*N3	R337	*N5
C117	P3	C307	*P7	C512	*M2	C733	*J5	C1113	*H2	C1321	*E1	C1517	*F4	C1706	D6	C1854	*C2	D1803	*C7	IC906	M5	IC1804	B6	L703	K6	Q:35	M3	Q914	*J7	R130	*N2	R222	M3	R338	*P5
C118	*M1	C308	P6	C513	L2	C734	J6	C1114	*H3	C1322	E1	C1518	*F5	C1707	*E2	C1855	*C6	D1804	*C7	IC907	M7	IC1805	*C6	L704	L6	Q:36	P4	Q915	*A6	R131	*N1	R223	*N4	R339	*N5
C119	*N1	C309	*P6	C514	L2	C735	J6	C1115	*H3	C1323	*E2	C1519	*F5	C1708	*E6	C1856	*C5	D1808	*C5	IC908	M7	IC1806	C4	L705	*K6	Q:37	P4	Q916	*A7	R132	*P3	R224	*N3	R340	*P5
C120	*M2	C310	P7	C515	*M2	C736	*J5	C1116	H2	C1324	*P2	C1520	*F5	C1709	*E1	C1857	*C6	D1809	*C5	IC909	M7	IC1807	C4	L706	J6	Q:38	M3	Q917	*G1	R133	*P3	R225	*N3	R341	*N5
C121	*P3	C311	*P7	C516	M3	C737	*J7	C1117	J2	C1325	*P2	C1521	*F5	C1710	*E3	C1858	*C5	D1810	*C5	IC910	A1	IC1808	B6	L707	*J7	Q:39	L3	Q918	*H7	R134	*N1	R226	*N3	R342	*P5
C122	*N3	C312	*P6	C517	*L3	C738	*J7	C1118	*H2	C1326	*P2	C1522	*F5	C1711	*E6	C1859	*C6	D1910	*C1	IC911	B2	IC1809	B5	L708	*J7	Q:40	M3	Q919	*B6	R135	N1	R227	*N3	R343	*P5
C123	*P3	C313	*P6	C518	M3	C739	J7	C1119	*J2	C1327	*P2	C1523	*F5	C1712	E7	C1860	*C5			IC913	*B5	IC1810	C4	L901	A4	Q:41	L3	Q920	*G1	R136	*P3	R228	*N3	R344	*N5
C124	*N3	C314	P6	C519	M3	C740	J7	C1120	*H3	C1328	*P2	C1524	*G6	C1713	*D6	C1861	*C5	E101	*P4	IC914	*J1	IC1811	*C5	L902	A6	Q:42	L3	Q921	*J7	R137	*P3	R229	*N4	R345	*N5
C125	*M1	C315	*P5	C520	M2	C741	*J7	C1121	*J2	C1329	*P2	C1525	G7	C1714	E3	C1862	*C5	E102	*P2	IC915	J7	IC1812	C6	L903	A7	Q:43	L3	Q922	*B6	R138	N1	R230	*N3	R346	*P5
C126	*P3	C316	*N5	C521	L2	C742	*K7	C1122	*J2	C1330	*P2	C1526	*G6	C1715	*E2	C1863	*C5	E103	*N4	IC916	A7	IC1813	C7	L904	A5	Q:01	*P6	Q1101	*J3	R139	*N1	R231	*N4	R347	*P5
C127	*N3	C317	*P5	C522	L2	C743	*K6	C1123	H2	C1331	*P3	C1527	*G6	C1716	*E6	C1864	*C5	E104	*P4	IC917	*H1	IC1814	C5	L905	A5	Q:02	*P5	Q1102	*J3	R140	*N1	R232	*M4	R348	*N5
C128	*P3	C318	*N5	C523	L2	C744	*J7	C1124	*H3	C1332	P4	C1528	G7	C1717	*E3	C1865	*C5	E301	*P5	IC918	*H7	IC1815	*C5	L906	A6	Q:03	*P5	Q1103	*H4	R141	*N1	R233	*M3	R349	*N5
C129	*N3	C319	P5	C524	L2	C745	*J6	C1125	*H2	C1401	P4	C1529	*G7	C1718	*E6	C1866	*C1	E302	*P6	IC919	*B7	IC1816	*C6	L1101	H4	Q:04	*P5	Q1104	*H4	R142	*M1	R234	N4	R350	*N5
C130	*M2	C320	*P5	C525	L3	C746	*J6	C1126	*H1	C1402	P3	C1530	*G6	C1719	*E3	C1867	*B1	E303	*N6	IC920	*H1	IC1817	C7	L1102	*J3	Q:05	*N5	Q1105	*H3	R143	*M1	R235	N3	R351	*N5
C131	*N2	C321	*N5	C526	*L3	C747	*J6	C1127	*H3	C1403	*E3	C1531	*G6	C1720	*E6	C1868	*B3	E304	P6	IC921	*H7	IC1818	C5	L1103	*H2	Q:06	*P5	Q1106	*H3	R144	*M1	R236	N4	R352	*N5
C132	*P2	C322	P5	C527	*L3	C901	*M7	C1128	*H2	C1404	*E2	C1532	*G6	C1721	*E3	C1869	*C3	E501	*J1	IC922	B6	IC1819	B5	L1104	*H1	Q:07	*N5	Q1107	*H3	R145	N3	R237	M3	R353	*N5
C133	*N2	C323	P5	C528	*L3	C902	*L7	C1129	H1	C1405	*P3	C1533	*G6	C1722	*E3	C1870	*C4	E502	*L3	IC1101	H4	IC1820	B5	L1105	*H1	Q:08	*N5	Q1108	*H2	R146	P3	R238	*M3	R354	*P5
C134	*P2	C324	*N5	C529	*L3	C903	M6	C1130	H1	C1406	*P2	C1534	*F5	C1723	*E6	C1871	*C4	E503	J1	IC1102	H4	IC1821	*C3	L1106	*H3	Q:09	*P5	Q1109	*H3	R147	*M1	R239	P4	R355	*P5
C135	*M2	C325	P5	C530	*L3	C904	M4	C1131	H3	C1407	*P2	C1535	*F6	C1724	*E3	C1872	B1	E701	*L6	IC1103	*H2	IC1822	C5	L1201	*H5	Q:10	*P4	Q1110	*H3	R148	*M1	R240	P4	R356	*P5
C136	*P2	C326	*P5	C531	K1	C905	M5	C1132	J3	C1408	*P3	C1536	*F6	C1725	*E6	C1873	B2	E702	K7	IC1104	J2	IC1823	C5	L1202	*H6	Q:11	*N4	Q1111	H3	R149	*P3	R241	*M3	R357	*P5
C137	*N2	C327	*P5	C532	K1	C906	M4	C1133	*H2	C1409	E2	C1601	P4	C1726	*E3	C1874	*C4	E901	N7	IC1105	H2	IC1824	C2	L1203	*H7	Q:12	*P4	Q1201	*J5	R150	*N3	R242	P4	R358	*N5
C138	*M2	C328	*P5	C533	K1	C907	M5	C1134	*H3	C1410	E2	C1602	G6	C1727	*E6	C1875	*C4	E1101	H2	IC1106	H4	IC1825	*C2	L1204	*H7	Q:13	*N4	Q1202	*J5	R151	*M1	R243	P4	R359	*N5
C139	*P2	C329	*N5	C534	*K1	C908	M5	C1135	*H3	C1411	F2	C1603	*F5	C1728	*E6	C1876	*B6	E1102	*H4	IC1107	H3	IC1826	*C2	L1205	*J5	Q:14	P4	Q1203	*H4	R152	*P3	R244	P4	R360	*P5
C140	*N2	C330	*P5	C535	*K4	C909	*L7	C1136	*J3	C1412	F3	C1604	*G5	C1729	*E6	C1877	*C4	E1201	J6	IC1108	H3	IC1827	C6	L1301	*P3	Q:15	N4	Q1204	*H4	R153	*N3	R245	*M3	R361	*P5
C141	*P2	C331	*N5	C536	*K4	C910	*L7	C1138	H3	C1413	*G3	C1605	*G5	C1730	*E6	C1878	C5	E1301	*L1	IC1109	H2	IC1828	C5	L1302	*P3	Q:16	*N5	Q1205	*H5	R154	*M1	R246	N4	R362	*N5
C142	*N2	C332	*P5	C537	*K2	C911	L6	C1139	H3	C1414	F3	C1606	*F5	C1731	*E5	C1879	*B5	E1401	*L1	IC1110	H5	IC1829	C1	L1303	*P3	Q:17	N5	Q1206	*H5	R155	*M2	R247	*M3	R363	*P4
C143	*P2	C333	*N5	C538	K2	C912	L7	C1140	*H3	C1415	F3	C1607	*E5	C1732	*E4	C1880	*E1	E1501	*L1	IC1111	*G1	IC1830	C3	L1304	*E3	Q:18	*N6	Q1207	*H5	R156	*M2	R248	*M3	R364	*P4
C144	*N2	C334	*P5	C539	*K2	C913	*M7	C1141	*H3	C1416	F3	C1608	*G5	C1733	*D4	C1881	*B7	E1601	*E6	IC1112	*G4	IC1831	B1	L1305	E2	Q:19	*N6	Q1208	*H5	R157	*M2	R249	*M3	R365	*N4
C145	*P2	C335	*P4	C540	J2	C914	*L7	C1142	*H2	C1417	G3	C1609	*F5	C1734	*D4	C1882	*C7	E1701	*E7	IC1113	*G1	IC1832	B2	L1310	*G2	Q:20	M6	Q1209	*H5	R158	*P3	R250	*L3	R366	*N4
C146	*N2	C336	*N4	C541	K2	C915	N7	C1143	*G1	C1418	G3	C1610	*G5	C1735	*D4			E1702	*C3	IC1114	J2	IC1833	C4	L1401	*E3	Q:21	P6	Q1210	H5	R159	*N3	R251	*L3	R367	P5
C147	N2	C337	P4	C542	K4	C916	*M7	C1144	*G4	C1419	*G3	C1611	*G5	C1736	*D4	CL901	M5	E1703	C1	IC1201	*H6	IC1834	*C6	L1402	*P2	Q:22	P7	Q1301	*P3	R160	*P3	R252	P4	R368	P5
C148	P2	C338	N4	C543	K2	C917	*B1	C1145	*G1	C1420	*G2	C1612	G5	C1737	*E6	CL902	M4	E1801	C2	IC1202	H6			L1403	G1	Q:501	L4	Q1302	*P3	R161	*N3	R253	P4	R369	*P4
C149	N2	C339	P5	C544	*K4	C918	*B1	C1146	H4	C1421	*P3	C1613	G6	C1738	*D3	CL904	A2	E1802	*B6	IC1203	H6	L101	*P3	L1501	*G5	Q:502	L3	Q1401	*E3	R162	*M1	R254	P4	R370	*P5
C150	P2	C340	P4	C545	K2	C919	*B1	C1147	G6	C1422	*G4	C1614	E5	C1739	D7	CL905	A2			IC1207	H5	L102	*N1	L1502	*G4	Q:503	M3	Q1402	*F3	R163	*M1	R255	*P4	R371	N5
C151	P2	C341	N4	C546	*J4	C920	*B2	C1148	J2	C1423	*G4	C1615	G6	C1740	E7	CL906	A6	FL101	P2	IC1208	H6	L103	*N1	L1503	*P5	Q:504	M3	Q1403	*E2	R164	*M1	R256	*M3	R372	N5
C152	P3	C342	P5	C547	*J4	C921	A4	C1149	*H4	C1424	G4	C1616	G6	C1741	E7	CL907	*A5	FL103	N2	IC1214	G6	L104	*N1	L1504	*P5	Q:505	*L1	Q1404	*E3	R165	*M1	R257	*N4	R373	*N4
C153	P2	C343	P6	C548	*J4	C922	A6	C1201	*J5	C1425	*G2	C1617	*G5	C1742	*C4	CL908	B6	FL301	P5	IC1301	P2	L105	*N1	L1505	*P4	Q:506	*L1	Q1405	*G2	R166	*M1	R258	P4	R374	*N5
C154	P3	C344	P5	C549	*J4	C923	A7	C1202	*H4	C1426	*G2	C1618	F5	C1743	*E1	CL909	*B6	FL303	N5	IC1302	*E1	L106	*N1	L1506	*P5	Q:507	*L1	Q1406	*G4	R167	*P2	R259	*L3	R375	P4
C155	N3	C345	P4	C550	*J2	C924	*A4	C1203	J5	C1427	*G2	C1619	F5	C1800	C5	CL1802	A2	FL501	L1	IC1303	*E1	L107	*P3	L1507	*G7	Q:508	*L1	Q1407	G2	R168	*P2	R260	*L3	R376	N4
C156	*N3	C346	N4	C551	*K1	C925	*A5	C1204	*H5	C1428	G1	C1620	F5	C1801	*B5	CL1803	A2	FL502	L1	IC1304	*F1	L108	*N3	L1601	*G5	Q:509	*L1	Q1408	G2	R169	*N2	R261	N4	R377	P4
C157	P2	C347	P6	C552	*K1	C926	*A6	C1205	*H6	C1429	*G2	C1621	F5	C1802	B2			FL503	K4	IC1305	*E2	L109	*P2	L1602	*P6	Q:510	*L2	Q1409	G2	R170	*N2	R262	N5	R378	N4
C158	P3	C348	*N4	C553	*J3	C927	A5	C1206	*H6	C1430	*G2	C1622	F5	C1803	*B6	CN1	*P4	FL504	K3	IC1306	*P2	L110	*N2	L1603	*P6	Q:511	*L2	Q1410	*F1	R171	*M2	R263	*L3	R379	P4
C159	P3	C349	*N5	C554	*K2	C928	A4	C1207	*H6	C1431	*G2	C1623	F5	C1804	B4	CN100	A2	FL701	L4	IC1307	E3	L111	*N2	L1610	*E6	Q:512	*K1	Q1411	*F1	R172	*N2	R264	P4	R380	N4
C160	N3	C350	*N6	C555	*K1	C929	A6	C1208	*H6	C1432	*G2	C1624	F5	C1805	B4	CN101	A2	FL702	L4	IC1402	*F3	L112	*N2	L1701	*E7	Q:513	*K1	Q1412	*F1	R173	*P2	R265	L3	R381	*M4
C161	P3	C351	N5	C556	*J2	C930	A7	C1209	*H6	C1433	*G2	C1625	*F6	C1806	*B4			FL703	K5	IC1404	G2	L113	*P2	L1702	*E3	Q:514	*K1	Q1501	*F4	R174	*M2	R266	L3	R382	N5
C162	N3	C352	N6	C557	J2	C931	A5	C1210	*H5	C1434	*G3	C1626	*F5	C1807	*B4	D101	P4	FL1101	H4	IC1405	G2	L114	*M2	L1801	*B4	Q:515	*K4	Q1502	*F5	R175	*M2	R267	*L3	R383	N5
C163	*M2	C353	N6	C558	J2	C932	A5	C1211	*H5	C1435	F3	C1627	*E6	C1808	C6	D301	P7	FL1201	H5	IC1406	*G3	L115	*N2	L1802	*B4	Q:516	*K3	Q1601	*G5	R176	*N2	R268	L3	R384	*N5
C164	*M2	C354	*N5	C559	*J2	C933	H1	C1212	H6	C1436	*G3	C1628	*E6	C1809	*C6	D501	L3			IC1407	*G3	L116	*P2	L1803	B4	Q:517	*J4	Q1602	*G5	R177	*P2	R269	*N4	R385	*N6
C165	L3	C355	*N5	C560	J1	C934	A6	C1213	H6	C1437	*G3	C1629	*E6	C1810	*B4	D502	L3	IC101	*P4	IC1408	*P2	L117	P2	L1804	B4	Q:518	*J3	Q1603	*G5	R178	*N2	R270	*P4	R386	N5
C166	*N3	C356	*N6	C561	*J2	C935	*A4	C1214	H6	C1438	*F2	C1630	*E6	C1811	*B6	D503	*K1	IC102	N4	IC1409	*G3	L118	P3	L1805	*B5	Q:519	*K2	Q1604	*P6	R179	*N2	R271	*P4	R387	*N5
C167	*N3	C357	*N6	C562	J1	C936	*A6	C1215	*H6	C1439	G3	C1631	*E6	C1812	*B4	D504	*K1	IC103	N2	IC1410	P2	L119	P2	L1806	*C6	Q:520	*J2	Q1605	*P4	R180	*N2	R272	*N4	R388	*N5
C168	*N3	C358	*N6	C563	J1	C937	*A7	C1216	*H5	C1440	F3	C1632	E7	C1813	B6	D505	*J2	IC104	N2	IC1411	P2	L120	*L3	L1807	*B5	Q:521	*J1	Q1606	E5	R181	*N3	R273	*N4	R389	*N6
C169	*N4	C359	*N6	C564	J1	C938	*A5	C1217	*H6	C1441	F3	C1633	*E7	C1814	*B6	D701	L6	IC105	*M2	IC1501	P6	L121	*N3	L1808	*B5	Q:522	*J2	Q1607	E5	R182	*P2	R274	*N4	R390	*N6
C170	*N3	C360	*M3	C565	*J2	C939	*A5	C1218	H6	C1442	G3	C1634	*E6	C1815	*B6	D702	*K6	IC106	*M3	IC1502	*G7	L122	*N4	L1810	*B2	Q:523	*J2	Q1608	E5	R183	*P2	R275	M3	R391	*N6
C171	*N4	C361	*M3	C566	*K2	C940	*A6	C1219	*H5	C1443	*G2	C1635	*E6	C1816	*B4	D703	*K6	IC108	*P4	IC1503	*G6	L123	*M3			Q:524	*J2	Q1609	*P7	R184	*P2	R276	M3	R392	*N6
C172	*M3	C362	*M4	C567	*J1	C941	B5	C1220	*H6	C1444	*G2	C1636	*E5	C1817	*C4	D704	*J6	IC109	N4	IC1504	*G7	L124	M3	LV1401	F1	Q:525	*J2	Q1610	*P7	R185	*P3	R301	*P6	R393	*N6
C173	*M4	C363	*N6	C568	*J1	C942	H1	C1221	*H5	C1445	*G2	C1637	*E5	C1818	*B4	D901	*M7	IC110	N4	IC1505	*G6	L125	P4	LV1601	F7	Q:526	*J2	Q1611	*P7	R186	*P3	R302	*P6	R394	*N6
C174	*M3	C364	*N6	C569	*J2	C943	H1	C1222	*H6	C1446	*G3	C1638	*P5	C1819	B5	D902	*B5	IC111	N4	IC1506	*P6	L301	P7			Q:702	*L4	Q1801	*B4	R187	*N3	R303	*P6	R395	*N6
C175	*M3	C365	*M6	C570	*J2	C944	H7	C1223	*H6	C1447	*G2	C1639	*P5	C1820	*B5	D903	*H1	IC301	*P7	IC1507	P6	L302	*P5	Q101	*P3	Q:703	*L5	Q1802	*C5	R188	*P2	R304	*P7	R396	*N6
C176	*N4	C366	M5	C571	*J2	C945	J7	C1224	H6	C1448	G3	C1640	*P5	C1821	*B4	D904	*J1	IC302	*P6	IC1510	P6	L303	*N5	Q102	*P3	Q:704	*L4	Q1803	*C5	R189	*P2	R305	*P7	R397	*N6
C177	N4	C367	*N6	C701	L5	C946	A6	C1225	H6	C1449	*G3	C1641	*P6	C1822	*C4	D905	*H7	IC303	*P7	IC1601	E4	L304	P5	Q103	N1	Q:705	*L5	Q1804	*B6	R190	*N2	R306	*P7	R398	*M3
C178	M2	C368	*M6	C702	*L6	C947	B7	C1226	J5	C1450	*G3	C1642	*P5	C1823	*C5	D906	*J7	IC304	N6	IC1603	P4	L305	*P5	Q104	*P3	Q:706	*L5	Q1805	*B7	R191	*P2	R307	*P6	R399	*M4
C179	P3	C369	*M6	C703	L5	C948	*H1	C1227	H6	C1451	*G3	C1643	P5	C1824	C6	D907	*A6	IC305	*M5	IC1604	E5	L306	*N5	Q105	N1	Q:707	*L5			R192	*P2	R308	*P7	R400	*N6
C180	*M3	C370	P6	C704	*M5	C949	*H1	C1228	*H6	C1452	*G3	C1644	E6	C1825	*C7	D908	*A7	IC308	*P7	IC1605	*E5	L307	*P5	Q106	*N1	Q:708	*L5	R101	M2	R193	*N2	R309	*P7	R401	*N6
C181	P4	C371	*M6	C705	*L6	C950	*H7	C1229	*H5	C1453	*F2	C1645	*P6	C1826	*C7	D1101	J2	IC309	N6	IC1606	*E6	L308	*P5	Q107	*M1	Q:709	*L5	R102	M2	R194	*N2	R310	*P7	R402	M6
C182	*M3	C372	M6	C706	M5	C951	*J7	C1230	*H5	C1454	*F1	C1646	*P6	C1827	B5	D1102	*H3	IC310	N7	IC1608	E6	L309	*N5	Q108	M1	Q:710	*K5	R103	M1	R195	*M2	R311	*P6	R403	*M6
C183	*M3	C373	*M6	C707	M5	C952	*B6	C1232	H5	C1455	*F1	C1647	*P5	C1828	*B5	D1103	*H3	IC311	N7	IC1609	E7	L310	*P5	Q109	*M1	Q:711	*K6	R104	M2	R196	*P2	R312	*P7	R404	*M6
C184	L3	C374	P6	C708	L5	C953	*A6	C1233	H5	C1456	*F1	C1648	*P6	C1829	B5	D1104	*H3	IC501	L4	IC1610	*E5	L311	P5	Q110	*M1	Q:712	*K6	R105	M1	R197	*P2	R313	N6	R405	*L6
C185	N3	C375	*L6	C709	L5	C954	H1	C1234	H5	C1457	*F3	C1649	*P6	C1830	*C6	D1110	J3	IC502	L3	IC1611	*P6	L312	P5	Q111	*P3	Q:713	*K6	R106	*P4	R198	*P2	R314	P6	R406	P6
C186	N3	C377	N6	C710	L5	C955	H1	C1235	H5	C1458	*F1	C1650	*P6	C1831	*C4	D1201	H6	IC503	M1	IC1612	*P5	L313	P4	Q112	*M3	Q:714	*K5	R107	*P3	R199	*P2	R315	P6	R407	P6
C187	*M3	C378	N6	C711	L5	C956	J7	C1236	*H5	C1459	*F1	C1651	*P5	C1832	C6	D1202	*H5	IC504	M2	IC1614	P7	L314	N4	Q113	M2	Q:715	*J5	R108	*P3	R200	*N2	R316	*P7	R408	P6
C188	*L4	C379	P7	C712	L5	C957	H7	C1237	*H6	C1460	*P3	C1652	E5	C1833	*C7	D1203	*H5	IC505	*L2	IC1701	*E1	L315	*N6	Q114	*M2	Q:716	*K5	R109	*P4	R201	*N2	R317	*P7	R409	P7
C190	P4	C380	N6	C713	*K5	C958	A6	C1301	P3	C1461	*P2	C1653	*P5	C1834	C5	D1204	*H5	IC506	M3	IC1702	D2	L316	*N6	Q115	*M1	Q:717	*J6	R110	*P4	R202	*N2	R318	*P7	R410	P7
C191	N4	C381	N7	C714	K6	C959	B6	C1302	P3	C1462	G1	C1654	E5	C1835	*C5	D1210	*H5	IC507	*K4	IC1703	D5	L317	M6	Q116	M1	Q:718	*J7	R111	N3	R203	*N2	R319	*P6	R411	N6
C192	P4	C382	P7	C715	K7	C960	*H1	C1303	*P3	C1463	*G2	C1655	*F7	C1836	C7	D1301	*P2	IC508	K2	IC1704	E6	L318	M6	Q117	*M1	Q:719	*J6	R112	P3	R204	*P2	R320	*P6	R412	*N6
C193	N4	C383	P6	C716	K7	C961	*J1	C1304	*P3	C1464	*P2	C1656	*F7	C1837	*C7	D1401	*G3	IC509	*J4	IC1705	E3	L319	P6	Q118	*N2	Q:720	*J6	R113	P3	R205	*N2	R321	*P5	R413	P6

R414	P7	R531	*K1	R724	*L4	R910	M4	R1102	*J3	R1227	*H5	R1366	*G3	R1515	*F4	R1607	*F5	R1810	*B2	R1902	*C1	TH1402	*G1
R415	P6	R532	*K1	R725	*L5	R911	M5	R1103	H3	R1228	*H5	R1367	F3	R1516	*F5	R1608	F5	R1811	*B2	R1903	*C1	TH1601	*E4
R416	*P6	R533	*K2	R726	*L4	R912	*M7	R1104	H3	R1229	*H5	R1368	F3	R1517	*F5	R1609	*E6	R1812	*B2	R1904	*C1	TH1602	*E6
R417	*P6	R534	*K4	R727	*L4	R913	*L7	R1105	*J3	R1230	*H5	R1369	F3	R1518	*F5	R1610	*F6	R1813	*B3	R1905	*C1		
R418	P7	R535	*K4	R728	*M4	R914	*M7	R1106	*J3	R1231	H6	R1370	F3	R1519	*F6	R1611	*F6	R1814	*B4	R1906	*C5	TP101	*P4
R419	N7	R536	*K4	R729	*L5	R915	*L7	R1107	*J3	R1232	*H5	R1371	F3	R1520	*F5	R1612	*F6	R1815	*B3	R1907	*C1	TP102	*P3
R420	P7	R537	*K4	R730	*L4	R916	*M7	R1108	*J3	R1233	H6	R1372	F3	R1521	F6	R1613	*F6	R1816	*B4	R1908	*C1	TP103	P3
R421	N7	R538	*K3	R731	*L5	R917	*M7	R1109	*J3	R1234	*H5	R1373	*G4	R1522	G6	R1614	*F6	R1817	*B3	R1909	*C5	TP104	*P3
R422	*N7	R539	*K3	R732	*L5	R918	*M7	R1110	H4	R1235	*H5	R1374	G3	R1523	G6	R1615	E5	R1818	*C6	R1910	*C1	TP105	*N3
R423	*N7	R540	*K4	R733	L5	R919	*M7	R1111	*J3	R1237	*H6	R1375	*G3	R1524	*G6	R1616	*F5	R1819	*C6	R1911	*C5	TP106	*N3
R424	*P6	R541	*K3	R734	L5	R920	*L7	R1112	H4	R1238	*H5	R1376	*G2	R1525	*G6	R1617	F5	R1820	*C6	R1912	*B4	TP107	*N3
R425	*N7	R542	*J4	R735	L5	R921	*M7	R1113	*J3	R1239	H6	R1377	*G2	R1526	*G6	R1618	*F6	R1821	*B2	R1913	*C4	TP108	N4
R501	*L4	R543	*J4	R736	L5	R922	*M7	R1114	*J3	R1240	H6	R1378	G4	R1527	*G6	R1619	E5	R1822	*C5	R1914	*C4	TP109	M2
R502	*L4	R544	*J3	R737	L5	R923	*M7	R1115	*H4	R1241	*H5	R1379	G4	R1528	*F6	R1620	E5	R1823	*B7	R1915	B2	TP110	*N4
R503	*L3	R545	*J4	R738	*L5	R924	*M7	R1116	*H4	R1242	*H5	R1380	*G4	R1529	*F6	R1621	E5	R1824	*B4	R1916	B2	TP111	*L3
R504	*L4	R546	*J4	R739	*L5	R925	*M7	R1117	*H4	R1243	*H5	R1381	*G3	R1530	*F6	R1622	F5	R1825	*B2	R1917	*C5	TP112	*N4
R505	*L4	R547	*J4	R740	*K5	R926	*L7	R1118	*H4	R1244	*H5	R1382	*G4	R1531	*F6	R1623	*F6	R1826	*B7	R1918	*C5	TP113	*P4
R506	L4	R548	*J4	R741	*L5	R927	*M7	R1119	*H3	R1245	*H5	R1383	*G2	R1532	*F6	R1624	E5	R1827	*B6	R1919	*B7	TP301	*P5
R507	*L4	R549	*J4	R742	*L5	R928	*L7	R1120	*H3	R1246	*H5	R1384	*G2	R1533	G5	R1625	E5	R1828	*B4	R1920	*B5	TP302	*P5
R508	*M1	R600	*J3	R743	*L5	R929	*L7	R1121	*H3	R1247	*H5	R1385	*G2	R1534	E4	R1626	F5	R1829	*B7	R1923	*B6	TP303	P6
R509	*M1	R601	*J4	R744	*L5	R930	*M7	R1122	*H3	R1248	*H5	R1386	*G2	R1535	F4	R1627	E5	R1830	*B6	R1924	*B5	TP304	*P5
R510	*L3	R602	*J4	R745	*L5	R931	*M7	R1123	*H3	R1249	H5	R1387	*G1	R1536	E5	R1628	F5	R1831	C7	R1925	*C1	TP305	*N5
R511	*M1	R603	*J3	R746	*K5	R932	*M7	R1124	*J2	R1250	H5	R1388	*G2	R1537	F5	R1629	E5	R1832	*B7	R1926	*B5	TP306	*N5
R512	*M1	R604	*J3	R747	K7	R933	*L7	R1125	*H2	R1251	H5	R1389	F1	R1538	F4	R1630	*F7	R1833	*B5			TP307	*N6
R513	*M1	R605	*K1	R748	*K6	R934	*M7	R1126	*J2	R1252	*H6	R1390	F3	R1539	F4	R1631	*F7	R1834	*B5	RB1801	*B2	TP308	M5
R514	*M1	R606	*K1	R749	*K6	R935	*L7	R1127	*J2	R1253	*H6	R1391	F3	R1540	*F4	R1632	*F7	R1835	*B5	RB1802	*B6	TP309	*L6
R515	*L3	R607	*K1	R750	*K6	R936	*M7	R1128	*J2	R1268	*H6	R1392	F3	R1541	*G6	R1633	*F7	R1836	*B4	RB1803	*B6	TP310	*N7
R516	*M1	R608	*K1	R751	*K6	R937	*L7	R1129	*H3	R1301	F1	R1393	F3	R1542	F4	R1634	*F7	R1837	*C5	RB1808	*B1	TP311	*N7
R517	*M1	R609	*K1	R752	*K6	R938	*M7	R1130	*H3	R1302	*E3	R1394	*G3	R1543	*F4	R1635	*F6	R1838	*C6	RB1809	*B1	TP312	*P7
R518	*M1	R610	*K1	R753	*K6	R939	*M7	R1131	*H3	R1303	P2	R1395	*G3	R1544	*F4	R1636	*F7	R1839	*C6	RB1810	*B1	TP501	*L3
R519	*M1	R611	*K1	R754	*K6	R940	*A1	R1132	*H3	R1304	P2	R1396	*G3	R1545	*F4	R1637	F6	R1840	*B7	RB1811	*B2	TP502	*L1
R520	*M2	R612	*K2	R755	*K5	R941	A1	R1133	*H3	R1305	G2	R1397	*G3	R1546	*G6	R1638	F6	R1841	*B7			TP503	*K2
R521	*M2	R613	*K2	R756	*K6	R942	*B1	R1134	*H3	R1306	*P3	R1398	*G2	R1547	*G6	R1639	F6	R1842	*B7	RV101	*P2	TP504	*K2
R522	*M1	R614	*K2	R757	*K6	R943	A1	R1135	*H2	R1307	*P2	R1399	*G2	R1548	F4	R1640	F7	R1843	*C7	RV102	*P2	TP505	*J3
R523	*M1	R615	*K2	R758	*K6	R944	*B2	R1136	*H3	R1308	*E3	R1400	G3	R1549	*E4	R1641	F7	R1844	*B7	RV103	*N2	TP506	*K2
R524	*L3	R616	*K3	R759	*K6	R945	*H1	R1137	H2	R1309	E3	R1401	G3	R1550	*E4	R1642	F5	R1845	*B7	RV104	*N2	TP508	*M1
R525	*L3	R617	*J2	R760	*K4	R946	*H1	R1138	H2	R1310	E3	R1402	*G2	R1551	E4	R1643	F7	R1846	*B7	RV105	*M3	TP701	*L6
R526	M3	R618	*J2	R761	*K5	R947	*J1	R1139	*H2	R1311	F3	R1403	G3	R1552	E4	R1644	P6	R1847	*B7	RV106	*M3	TP702	*L4
R527	L2	R619	*J2	R762	*K6	R948	*H7	R1140	*H3	R1312	*F3	R1404	*G3	R1553	P4	R1645	F7	R1848	*B7	RV107	*M2	TP703	*L6
R528	L2	R620	*J2	R763	*K6	R949	*J7	R1141	*H3	R1313	*E3	R1406	*G3	R1554	*G7	R1646	*E4	R1849	*C6	RV108	*M3	TP704	*K7
R529	M3	R621	*K2	R764	*L6	R950	*A6	R1142	*J2	R1314	F3	R1407	G2	R1555	F5	R1647	*F4	R1850	*C7	RV109	*N3	TP705	*K6
R530	L2	R622	*J1	R765	*L6	R951	*A7	R1143	*H3	R1315	F3	R1408	G3	R1556	*F4	R1648	*G6	R1851	*C7	RV110	*N4	TP706	*J6
R531	L2	R623	*J1	R766	*K6	R952	*H1	R1145	J2	R1316	*F3	R1409	G2	R1557	*F5	R1649	F5	R1852	*C6	RV111	*N4	TP1101	*J3
R532	L2	R624	*K1	R767	*K6	R953	*J1	R1146	J2	R1317	F3	R1410	*F2	R1558	*E4	R1650	E5	R1853	*C5	RV112	*N4	TP1102	H3
R533	M3	R625	*J1	R768	*K5	R954	*H7	R1147	*H3	R1318	*F3	R1411	G2	R1559	*G5	R1651	*F4	R1854	*C6	RV113	*N4	TP1201	*H5
R534	L2	R626	*J1	R769	*K5	R955	*H7	R1148	*H3	R1319	*F3	R1412	*F2	R1560	*G5	R1701	*E5	R1855	*C6	RV301	*P5	TP1202	H6
R535	L2	R627	*J1	R770	*J5	R956	*A6	R1149	*H3	R1320	*F3	R1413	G2	R1561	*F5	R1702	C2	R1856	*B6	RV302	*P4	TP1301	E3
R536	L2	R628	*K1	R771	*J5	R957	*A7	R1150	*H3	R1321	*F3	R1414	G2	R1562	*F5	R1703	C5	R1857	*C6	RV303	*N5	TP1302	E3
R537	L2	R629	*J2	R772	*J5	R958	*H1	R1151	*H3	R1322	*F3	R1415	G2	R1563	*G5	R1704	C2	R1858	*B6	RV304	*N4	TP1303	F1
R538	L2	R630	*J2	R773	*J5	R959	*J1	R1152	*H2	R1323	G2	R1416	*F1	R1564	*E5	R1705	C5	R1859	*C6	RV305	*M5	TP1304	E2
R539	*L2	R631	*K1	R774	*K5	R960	*H7	R1153	*H3	R1324	*E2	R1417	*F1	R1565	*E5	R1706	C2	R1860	*B6	RV306	*M4	TP1401	*F2
R540	*L1	R632	*J1	R775	*J5	R961	*J7	R1154	*H3	R1325	*E1	R1418	*F1	R1566	*E5	R1707	C5	R1861	*C4	RV307	*M4	TP1402	G3
R541	*L1	R633	*J1	R776	*J7	R962	*A7	R1155	J3	R1326	E1	R1419	*F1	R1567	*G5	R1708	*E4	R1862	*C4	RV308	*M4	TP1403	F1
R542	*L3	R634	*J2	R777	*K7	R963	*A7	R1156	J3	R1327	*E1	R1420	*F1	R1568	*G5	R1709	*D4	R1863	*C5	RV309	*N6	TP1404	G1
R543	*L3	R635	*J2	R778	*K7	R964	*H1	R1157	H3	R1328	*F2	R1421	*F1	R1569	*E5	R1710	*E1	R1864	*C4	RV310	*N6	TP1405	*E4
R544	*L1	R636	*J1	R779	*J7	R965	*J1	R1158	*H3	R1329	*F2	R1422	*F1	R1570	*E5	R1711	*D1	R1865	*B7	RV311	*N7	TP1405	*P4
R545	*L1	R637	*J2	R780	*J7	R966	H7	R1159	*H2	R1330	*F2	R1423	F2	R1571	*G5	R1712	*E6	R1866	*B7	RV312	*N6	TP1501	G5
R546	*L1	R638	*J2	R781	*K7	R967	J7	R1160	*G2	R1331	*E3	R1424	F2	R1572	G5	R1713	*E3	R1867	*C5	RV313	*N7	TP1502	G7
R547	*L3	R639	*J2	R782	*J7	R968	*A7	R1161	*G2	R1332	E3	R1425	F2	R1573	*E5	R1714	*E6	R1868	*C5	RV501	*L1	TP1503	F6
R548	*L3	R640	*J2	R783	*J7	R969	*A7	R1162	*G5	R1333	F4	R1426	F2	R1574	*E5	R1715	*E3	R1869	*C5	RV502	*L2	TP1601	*F7
R549	*L3	R641	*J2	R784	*J7	R970	*H1	R1163	*G5	R1334	F3	R1427	F2	R1575	G6	R1716	*E6	R1870	*C5	RV503	*J3	TP1602	E5
R550	*L1	R642	*J2	R785	*J7	R971	H7	R1164	*G2	R1335	F2	R1428	G1	R1576	G6	R1717	*E5	R1871	*C5	RV504	*J3	TP1603	F6
R551	*L1	R643	*J2	R786	*J7	R972	*A7	R1165	*G2	R1336	G2	R1429	F3	R1577	*E5	R1718	*E5	R1872	*C7	RV505	*L1	TP1604	F7
R552	*L3	R644	*J2	R787	*J7	R973	*H1	R1166	*G1	R1337	F3	R1430	P1	R1578	*G5	R1719	*D6	R1873	*B7	RV506	*L1	TP1801	B3
R553	*L3	R645	*J2	R788	*J7	R974	*H1	R1167	*G1	R1338	F4	R1431	P2	R1579	G5	R1720	*D4	R1874	*C7	RV701	*L4	TP1802	B3
R554	*L1	R646	*K1	R789	*J7	R975	H7	R1168	*H3	R1339	F4	R1432	P2	R1580	G5	R1721	*D4	R1875	*B7	RV702	*L5	TP1803	B3
R555	*L1	R647	*M1	R790	*J7	R976	H7	R1201	*J5	R1340	F4	R1433	P2	R1581	*E5	R1722	C4	R1876	*C7	RV703	*J5	TP1804	*B2
R556	*L1	R648	L2	R791	*J6	R977	*A7	R1202	*J5	R1341	F4	R1434	P2	R1582	*E5	R1724	*D7	R1877	*B6	RV704	*J5	TP1805	B2
R557	*L1	R649	*M1	R792	*J6	R978	*A7	R1203	*J5	R1342	F4	R1435	P2	R1583	F5	R1725	D7	R1878	*B5	RV1101	*H3	TP1806	B7
R558	*L2	R701	*L6	R793	*J6	R979	*J1	R1204	*J5	R1343	*P3	R1436	*G1	R1584	F5	R1726	*D3	R1879	*C5	RV1201	*H5	TP1807	B7
R559	*L1	R702	*L6	R794	*J6	R980	*J1	R1205	*J5	R1344	*E3	R1437	*E1	R1585	F5	R1727	*D3	R1880	*B6	RV1301	*F1	TP1808	B7
R560	*L2	R703	*M4	R795	*J6	R981	J7	R1206	*J5	R1345	*E3	R1438	G3	R1586	F5	R1728	D7	R1881	B5	RV1401	*G3	TP1809	B7
R561	*L1	R704	*M4	R796	*J6	R982	J7	R1207	*J5	R1346	*E3	R1439	*H2	R1587	F5	R1729	*D3	R1882	*C5	RV1402	*G2	TP1810	B3
R562	*L1	R705	*L6	R797	*J6	R983	*A7	R1208	*J5	R1347	*P4	R1440	*G2	R1588	F5	R1730	*D3	R1883	*C5	RV1410	*G2		
R563	*L1	R706	*L6	R798	*J6	R984	*B7	R1209	*J5	R1348	*P3	R1441	*H2	R1589	*P5	R1731	*D4	R1884	*C5	RV1411	*G3	X301	P7
R564	*K1	R707	L5	R799	*J6	R985	*G1	R1210	*H4	R1349	*E2	R1442	*G2	R1590	*P6	R1732	D7	R1885	*B5	RV1501	*G7	X302	P7
R565	*L2	R708	L5	R800	*J6	R986	*H7	R1211	*H4	R1350	*P3	R1443	*G3	R1591	*P6	R1733	D7	R1886	*B5	RV1601	*E4	X901	L7
R566	*L1	R709	L5	R801	*J6	R987	*B6	R1212	*H4	R1351	*P3	R1444	G3	R1592	*P5	R1734	D7	R1887	C2	RV1602	*E4	X1801	B6
R567	*L2	R710	L5	R802	*J5	R988	*H1	R1213	*H4	R1352	*P3	R1501	G6	R1593	*P5	R1737	D7	R1888	*C5	RV1603	*P5		
R568	*L1	R711	L5	R803	*J5	R989	*B6	R1214	*H4	R1353	*P3	R1502	E7	R1594	*P5	R1738	*D3	R1889	*C5	RV1604	*P4	*:B SIDE	
R569	*L1	R712	L5	R804	L5	R990	H7	R1215	*H6	R1354	*P3	R1503	E7	R1595	*P5	R1739	D6	R1890	*C5	RV1605	*P6		
R570	L2	R713	L5	R805	*K6	R991	*A7	R1216	*H6	R1355	*P3	R1504	P6	R1596	*E6	R1740	D6	R1891	*C5	RV1606	*P5		
R571	L2	R714	L5	R806	L5	R993	*G1	R1217	*H6	R1356	*P2	R1505	*G5	R1597	*P5	R1800	*C7	R1892	C6	RV1801	*C6		
R572	L2	R715	L5	R901	N5	R994	*H1	R1218	*H6	R1357	*P2	R1506	*G5	R1598	*P5	R1801	*B5	R1893	C6				
R573	*L2	R716	L5	R902	M5	R995	*H1	R1219	*H6	R1358	E2	R1507	G5	R1599	*E6	R1802	*B5	R1894	*B3	S101	*N3		
R574	*L2	R717	*L5	R903	M7	R996	*J7	R1220	*H6	R1359	*P3	R1508	*G5	R1600	*E6	R1803	*B5	R1895	*C3	S301	*N5		
R575	*K1	R718	*L4	R904	*N4	R997	*H7	R1221	*H6	R1360	E2	R1509	*G5	R1601	*E6	R1804	*B5	R1896	*C6	S501	*K3		
R576	*K1	R719	*L4	R905	*L7	R998	*J7	R1222	*H6	R1361	E2	R1510	*P5	R1602	*E6	R1805	*B5	R1897	*C5	S901	*L7		
R577	*K1	R720	*L4	R906	*N4	R999	*A5	R1223	*H5	R1362	E2	R1511	*P4	R1603	*E6	R1806	*B2	R1898	*C5	S1701	*D7		
R578	*K1	R721	*L4	R907	*M4	R1000	*B6	R1224	*H6	R1363	*G4	R1512	*P4	R1604	*P6	R1807	*B2	R1899	*C5	S1801	*C7		
R579	*K1	R722	*L4	R908	M4	R1001	*A6	R1225	*H6	R1364	*F3	R1513	*P4	R1605	F5	R1808	*B2	R1900	*C5				
R580	*K1	R723	*L5	R909	M5	R1101	*J3	R1226	*H5	R1365	*G3	R1514	*P4	R1606	F5	R1809	*B2	R1901	*B2	TH1401	*P3		

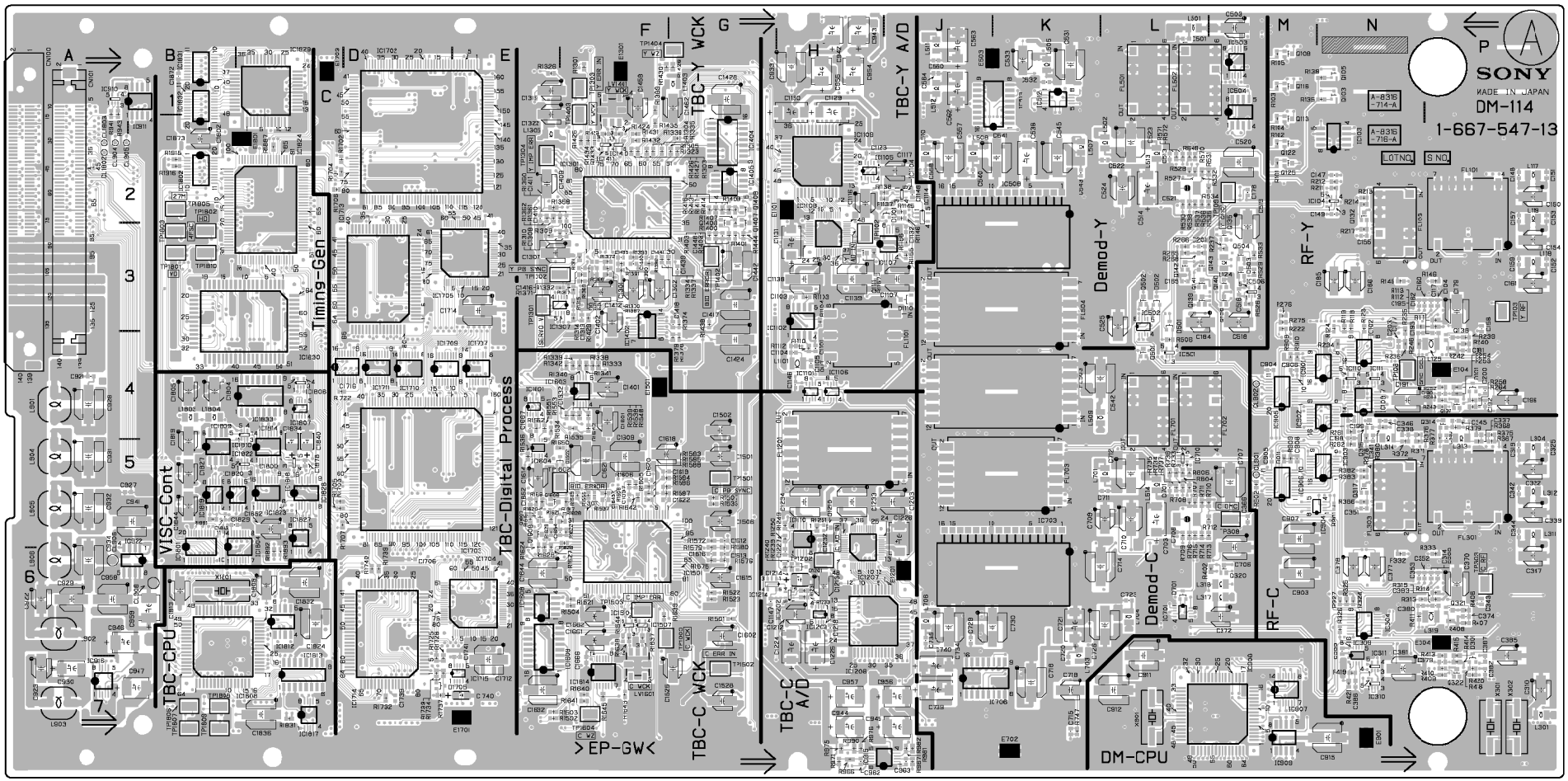

DM-114/114P -A SIDE-
SUFFIX: -13

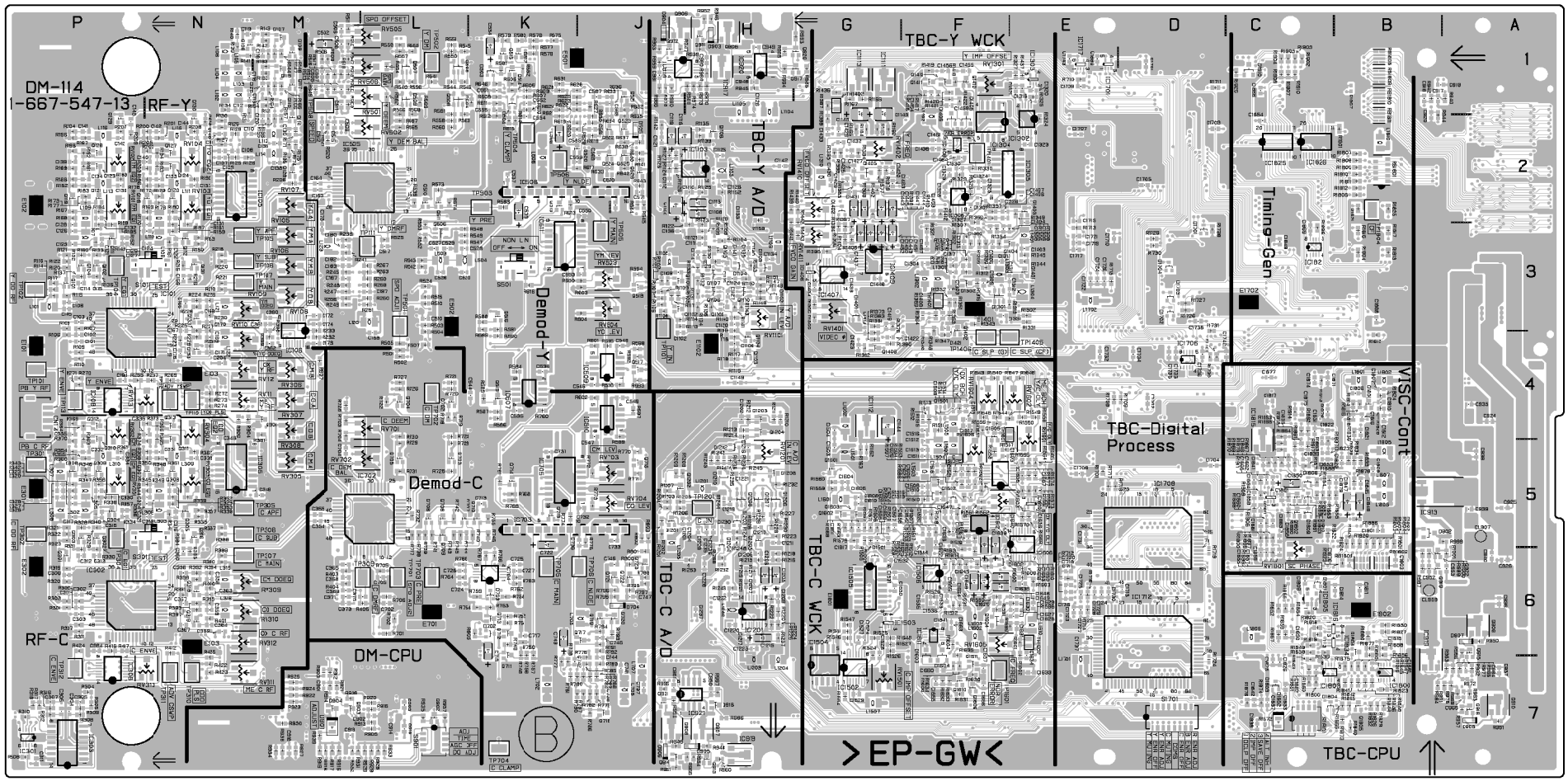

DM-114/114P -B SIDE-
SUFFIX: -13

DPR-87(1-667-475-13)

C1	*F5	C94	*H3	CL53	F3	R17	E4
C2	*F5	C95	*H3	CL54	F3	R18	D4
C3	*G4	C96	*H1	CL55	F3	R19	D4
C4	*G4	C97	H4	CL56	F3	R20	D3
C5	C5	C98	*G1	CL57	C4	R21	D3
C6	*D4	C99	E3	CL58	D5	R22	D3
C7	*C4	C100	F5	CL59	E5	R23	E3
C8	*C4	C101	*F3	CL61	F2	R24	E3
C9	C5	C102	E4	CL62	F5	R25	E3
C10	*D4	C103	E4			R26	A3
C11	B5	C104	E5	CN31	C5	R27	A3
C12	*D5	C105	F5	CN32	G5	R28	*A2
C13	*D5	C106	G4			R29	*A2
C14	G4	C107	G4	CP1	H3	R30	B3
C15	*E5	C108	G3			R31	*B4
C16	*F5	C109	*G3	E1	G3	R32	C3
C17	D4	C110	*F3	E2	A3	R33	*B3
C18	D4	C111	*F3	E3	*F1	R34	*B4
C19	H4	C112	*E3	E4	*C1	R35	*B4
C20	*B5	C113	E3			R36	*C4
C21	*A5	C114	D3	FB1	*H3	R37	*C4
C22	*D5	C116	*E1	FB2	*B5	R38	*C4
C23	*E5	C117	*E2			R39	*C4
C25	B4	C118	*E2	FL1	*G5	R40	D1
C26	*A4	C119	*E2	FL3	*B5	R41	D1
C27	*B4	C120	E2	FL4	A5	R42	*H3
C28	*A1	C121	*F1	FL5	*G5	R43	*D2
C29	B1	C122	E1	FL6	*H5	R44	C1
C30	B1	C123	*E1	FL7	*H5	R45	*C1
C31	*B1	C124	*E2			R46	G3
C32	*B2	C125	*F2	IC1	*F5	R47	G3
C33	B3	C126	*F2	IC2	*F5	R48	*H3
C34	A3	C127	*F1	IC3	C4	R49	*H3
C35	*A2	C128	*E1	IC4	G4	R50	*H3
C36	*A2	C129	*E1	IC5	G4	R51	*H4
C37	*A1	C130	*E1	IC6	*C5	R52	*H3
C38	*A1	C131	E1	IC7	*C4	R53	E4
C39	*B3	C132	*F2	IC8	*C5	R54	*D4
C40	*B3	C133	*F1	IC9	*D5	R55	E1
C41	*B1	C134	*F1	IC10	*G4	R56	E1
C42	*B1	C135	*E1	IC11	*B4	R57	*E1
C43	*C2	C136	*F2	IC12	*E5	R58	*E2
C44	*B3	C137	*E2	IC13	D5	R59	*F2
C45	B3	C138	*B3	IC14	D4	R60	*E5
C46	*B1	C139	*C4	IC15	*H4	R61	*F5
C47	*A3			IC16	*D5	R62	*F5
C48	*A2	CL1	C5	IC17	*E5	R63	B3
C49	A2	CL2	F5	IC18	*C4	R64	B3
C50	A3	CL3	F5	IC19	B4	R65	*C1
C51	A3	CL4	D5	IC20	B2	R66	F2
C52	*A4	CL5	D4	IC21	*A3	R67	G5
C53	*A2	CL6	D5	IC22	*A2	R68	G3
C54	*A3	CL8	F3	IC23	*A2	R69	G3
C55	*A2	CL9	D5	IC24	*A1	R70	*C1
C56	*A2	CL10	D5	IC25	*C3	R71	B3
C57	*A1	CL11	D5	IC26	C2	R72	D5
C58	*A1	CL12	D5	IC27	*C2	R73	D4
C59	*D2	CL13	C3	IC28	*D1		
C60	*D2	CL14	C4	IC29	*D2	RB1	G5
C61	*D2	CL15	C5	IC30	*D3	RB2	*C5
C62	D1	CL16	D5	IC31	*D3	RB3	*C5
C63	C1	CL17	D5	IC32	*F2	RB4	*C5
C64	*C2	CL18	C5	IC33	*G2	RB5	*D5
C65	D3	CL19	B5	IC34	*G3	RB6	*D5
C66	D3	CL20	A4	IC35	G1	RB7	G4
C67	C3	CL21	A4	IC36	*H1	RB8	*B5
C68	*C1	CL22	A4	IC37	*H4	RB9	*C5
C69	C1	CL23	C4	IC38	*E4	RB10	*B5
C70	*C3	CL24	C4	IC39	F4	RB11	*G4
C71	*C2	CL25	A4	IC40	*G3	RB12	*H4
C72	*C1	CL26	B3	IC41	*F3	RB13	*C4
C73	*C1	CL27	C3	IC42	*E3	RB14	*B4
C74	*D1	CL28	C3	IC45	E1	RB15	E5
C75	*D1	CL29	C1	IC46	*E1	RB16	H4
C76	*D1	CL30	C1	IC47	*E2	RB17	*E5
C77	*D1	CL31	C1			RB18	*E5
C78	D1	CL32	D1	R1	G5	RB19	*E5
C79	*C3	CL33	C4	R2	G5	RB20	G1
C80	*D1	CL34	C4	R3	B5	RB21	E3
C81	*D1	CL35	C4	R4	B5	RB22	E2
C82	*D2	CL36	E5	R5	*C5	RB23	E2
C83	*D2	CL37	B3	R6	E5		
C84	*D3	CL38	F3	R7	*E5	*:B SIDE	
C85	*D2	CL39	F2	R8	E5		
C86	*D3	CL44	E5	R9	E5		
C87	C3	CL45	E5	R10	D5		
C88	*G2	CL46	E4	R11	D4		
C89	*H2	CL47	G4	R12	D4		
C90	*G1	CL48	F2	R13	D4		
C91	G3	CL49	F3	R14	D4		
C92	H2	CL51	F2	R15	E4		
C93	*H1	CL52	C4	R16	E4		

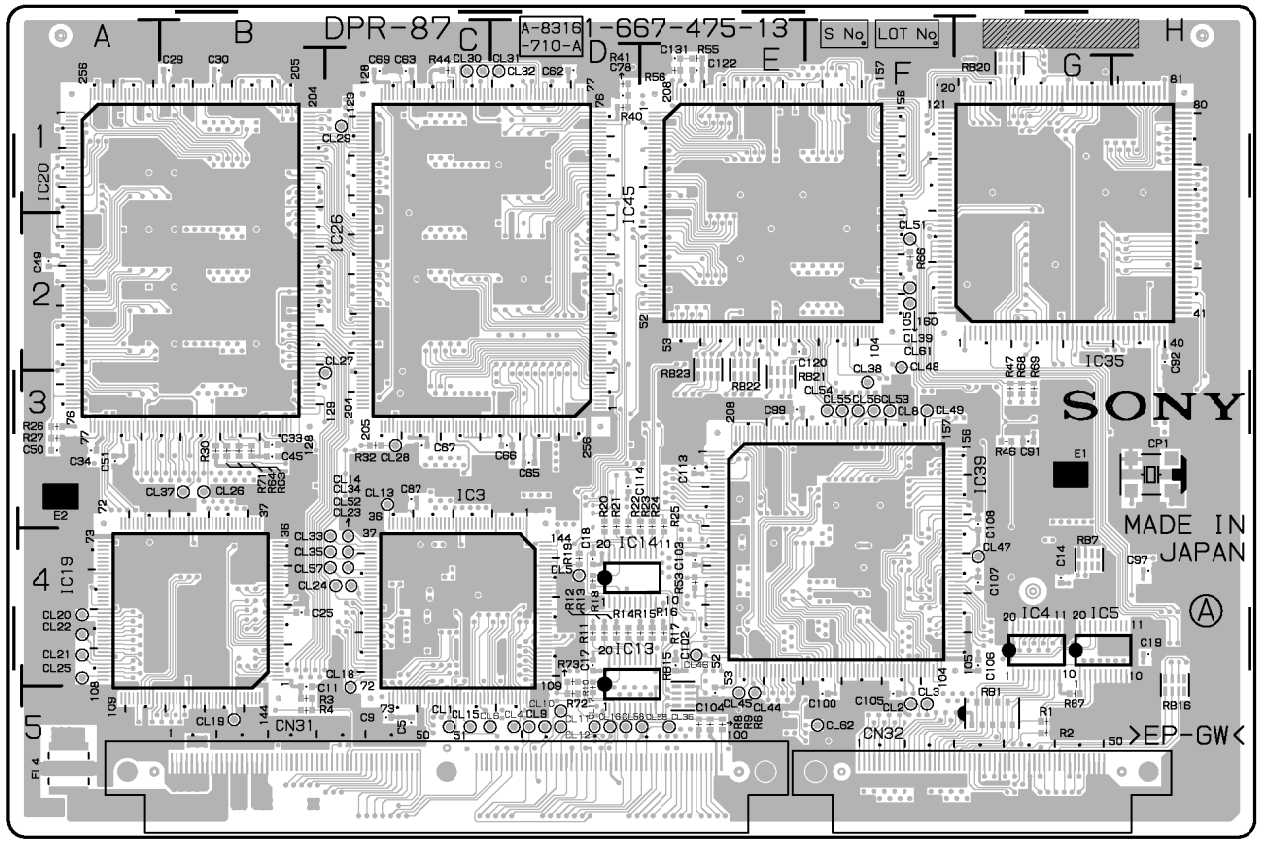

DPR-87 -A SIDE-
SUFFIX: -13

http://getMANUAL.com

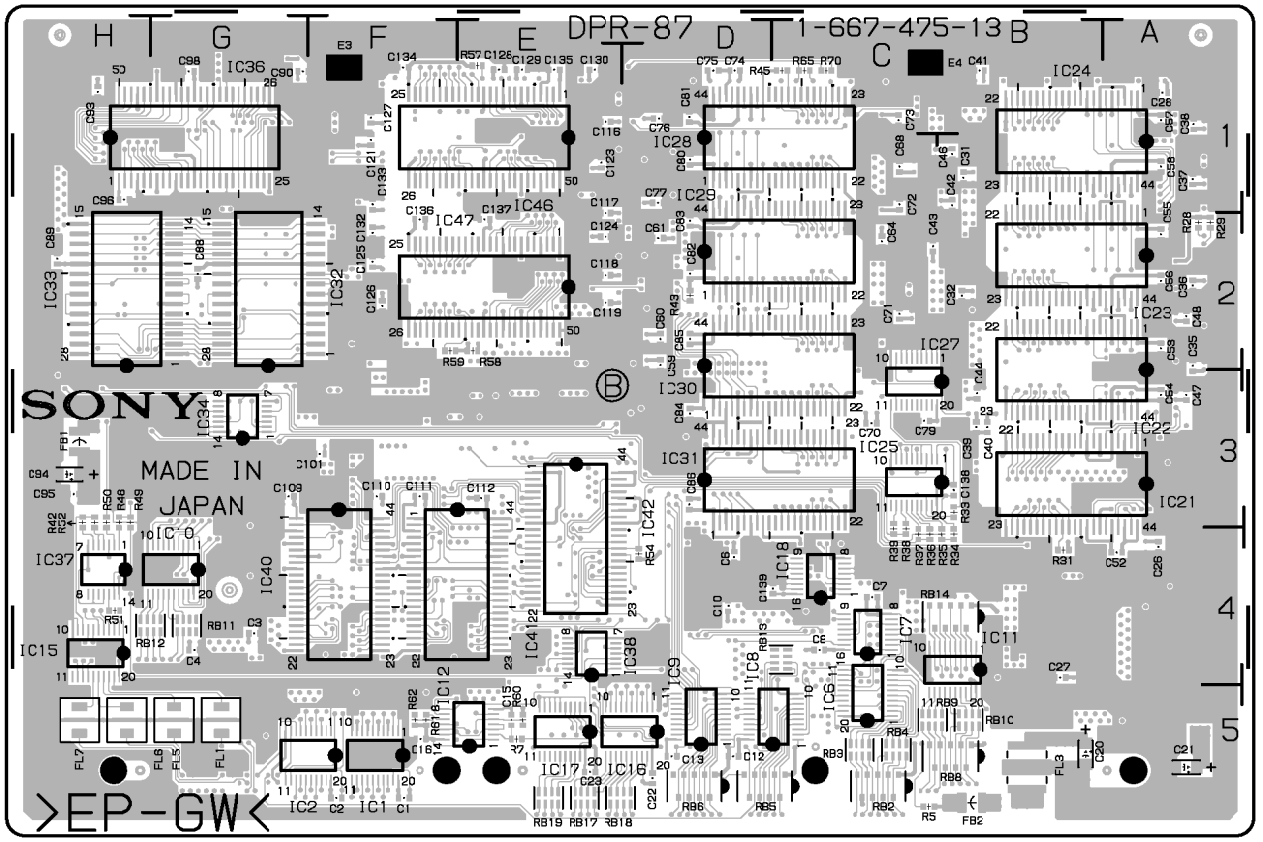

DPR-87 -B SIDE-
SUFFIX: -13

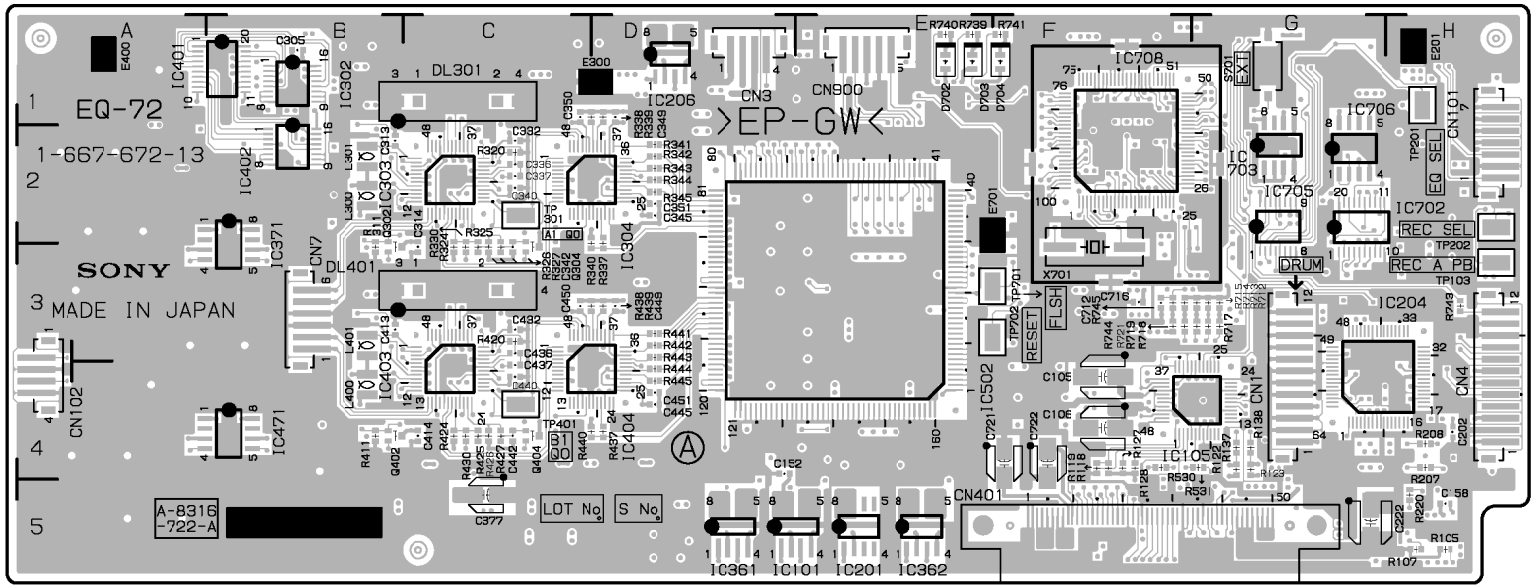

EQ-72 -A SIDE-
SUFFIX: -13

EQ-72(1-567-672-13)

C101	*G5	C220	*D1	C331	*C1	C374	*E5	C431	*C3	C508	*E4	C717	*G2	IC101	E5	IC704	*G3	Q104	*E4	Q5:0	*E2	R127	F4	R211	*H4	R319	*C1	R363	*E5	R422	*C4	R476	*A4
C102	*F4	C221	*H5	C332	C2	C375	*B2	C432	C3	C509	*D2	C718	*G2	IC102	*H5	IC705	G3	Q105	*F4	Q700	*G3	R128	F4	R212	*G4	R320	C2	R364	*E5	R423	*C4	R477	*B4
C103	*E4	C222	G5	C333	*C2	C376	*A3	C433	*C3	C509	*D3	C719	*G3	IC103	*G4	IC706	G2	Q106	*E4			R137	G4	R213	*G4	R321	*C2	R365	*D5	R424	C4	R478	*B4
C104	*F4	C240	*E1	C334	*C2	C377	C5	C434	*C4	C510	*F5	C720	*F2	IC105	G4	IC707	*F3	Q107	*F4	R1	*G3	R138	G4	R214	*D1	R322	*C2	R366	*D5	R425	C4	R603	*D2
C105	F4	C241	*E1	C335	*C2	C378	*B3	C435	*C3	C511	*E2	C721	F4	IC201	E5	IC708	F2	Q108	*F4	R2	*G3	R139	*D5	R215	*D1	R323	*C2	R367	*E5	R426	C4	R604	*D2
C106	F4	C242	*E1	C336	C2	C379	*B3	C436	C3	C512	*E3	C722	F4	IC202	*H5	IC709	*G3	Q109	*H3	R3	*G3	R140	*E5	R216	*D1	R324	C3	R370	*B2	R427	C4	R605	*D2
C107	*F4	C301	*C2	C337	C2	C391	*B1	C437	C4	C513	*D3			IC203	*H5	IC710	*F3	Q110	*H3	R4	*G3	R141	*E5	R217	*D1	R325	C3	R371	*B2	R428	*C4	R606	*D3
C108	*F4	C302	*A1	C338	*C2	C392	*B1	C438	*C4	C514	*D4	CL701	*F2	IC204	G4			Q111	*H2	R101	*G5	R151	*D5	R219	*G4	R326	C3	R372	*B2	R429	*C4	R607	*D3
C109	*F4	C303	*B1	C339	*C2	C402	*C3	C439	*C4	C515	*E3			IC206	D1	L101	*G5	Q112	*H2	R102	*G5	R152	*E5	R220	H5	R327	C3	R373	*B2	R430	C4	R608	*D3
C110	*G4	C304	*B3	C340	C2	C404	*B3	C440	C4	C516	*E4	CN1	G4	IC241	*E1	L102	*F4	Q113	*H2	R103	*G5	R153	*E5	R241	*G3	R328	*C3	R374	*B2	R431	*D3	R609	*D4
C111	*G4	C305	B1	C341	*C2	C405	*B1	C441	*C4	C517	*E2	CN3	D1	IC242	*E1	L103	*F4	Q114	*H2	R104	*F5	R154	*H3	R242	*E1	R329	*C3	R375	*A2	R432	*D3	R610	*D4
C112	*H3	C311	*B2	C342	C3	C411	*B4	C442	C4	C518	*E2	CN4	H4	IC302	B1	L105	*H3	Q115	*H1	R105	H5	R155	*H2	R243	*E1	R330	C3	R376	*A3	R433	*D3	R611	*D2
C113	*H3	C312	*B2	C343	*D2	C412	*B4	C443	*D3	C519	*E3	CN7	B3	IC303	C2	L106	*H2	Q116	*H1	R107	H5	R160	*H3	R244	*E1	R331	*D2	R377	*B3	R434	*D4	R612	*D3
C115	*H2	C313	B2	C344	*D2	C413	B3	C444	*D4	C520	*E4	CN101	H2	IC304	D2	L203	*D1	Q204	*D1	R109	*F4	R161	*H2	R245	*E1	R332	*D2	R378	*B3	R435	*D4	R613	*D2
C116	*G4	C314	C3	C345	D2	C414	C4	C445	D4	C521	*F5	CN102	A4	IC361	D5	L204	*D1	Q205	*D1	R110	*F4	R162	*H3	R246	*E1	R333	*D2	R391	*B1	R436	*D4	R614	*D3
C117	*H3	C315	*C2	C346	*C2	C415	*C3	C446	*C3	C701	*G2	CN401	F5	IC362	E5	L300	B2	Q206	*C1	R111	*F4	R163	*H2	R331	*C2	R334	*D2	R392	*B1	R437	D4	R615	*D2
C118	*H3	C316	*C2	C347	*C2	C416	*C4	C447	*C4	C702	*G3	CN900	E1	IC363	*B1	L301	B2	Q241	*E1	R112	*F4	R164	*H3	R333	*B1	R335	*D2	R401	*C3	R438	D3	R616	*D2
C119	*H2	C317	*B2	C348	*C2	C417	*B4	C448	*C4	C703	*G2			IC371	A2	L360	*C5	Q301	*B2	R113	*F4	R165	*H2	R334	*B2	R336	*D2	R407	*B3	R439	D3	R617	*D3
C121	*H1	C318	*B2	C349	D1	C418	*B4	C449	D3	C704	*G3	D701	*F2	IC401	A1	L361	*A2	Q302	B3	R114	*F4	R166	*H3	R335	*B1	R337	D2	R408	*B3	R440	D4	R618	*D3
C122	*H2	C319	*B2	C350	C1	C419	*B4	C450	C3	C705	*G2	D702	E1	IC402	B2	L362	*C5	Q303	*C2	R115	*F4	R167	*H2	R336	*B2	R338	D1	R409	*B3	R441	D3	R619	*D3
C151	*D5	C320	*B2	C351	D2	C420	*C3	C451	D4	C706	*G2	D703	E1	IC403	C4	L363	*C5	Q304	C3	R116	*G4	R168	*H2	R337	*B3	R339	D1	R411	B4	R442	D3	R620	*D3
C152	D4	C321	*C2	C352	*D2	C421	*B4	C452	*D4	C707	*G2	D704	F1	IC404	D4	L364	*C5	Q361	*D5	R117	*G4	R169	*H1	R338	*B3	R340	D2	R412	*B4	R443	D3	R621	*D4
C153	*E5	C322	*C2	C363	*D5	C422	*C4	C475	*B4	C708	*G2	D705	*F3	IC471	A4	L365	*D5	Q362	*D4	R118	F4	R170	*H3	R339	*B3	R341	D2	R413	*B4	R444	D4	R622	*D4
C154	*E5	C323	*B2	C364	*E5	C423	*B4	C476	*A4	C709	*F3			IC501	*E3	L366	*D5	Q363	*D4	R119	F4	R171	*H2	R311	B3	R342	D2	R414	*C3	R445	D4	R623	*D3
C158	H5	C324	*B2	C367	*C5	C424	*B3	C478	*B4	C710	*G1	DL301	C1	IC502	E3	L400	B4	Q364	*E4	R120	*F4	R201	*H4	R312	*B3	R343	D2	R415	*B4	R446	*D4	R624	*D3
C202	H4	C325	*C2	C368	*D5	C425	*C3	C479	*B4	C711	*F3	DL401	C3	IC505	*D3	L401	B3	Q365	*E4	R121	*F4	R202	*H4	R313	*B2	R344	D2	R416	*B3	R470	*B4	R625	*D4
C205	*H3	C326	*C2	C369	*C5	C426	*C4	C501	*D4	C712	F3			IC506	*D4	L501	*F5	Q371	*B2	R122	G4	R203	*H4	R314	*C2	R345	D2	R417	*C3	R471	*B4	R626	*D4
C206	*G4	C327	*B2	C370	*C5	C427	*B3	C502	*D3	C713	*G2	E201	H1	IC509	*F4			Q402	B4	R123	G4	R204	*H4	R315	*B2	R346	*D2	R418	*B3	R472	*B4	R627	*B3
C209	*D1	C328	*C2	C371	*D5	C428	*C4	C503	*D2	C714	*F2	E300	D1	IC701	*G3	Q101	*D5	Q403	*C3	R124	*G4	R207	H4	R316	*B2	R360	*D5	R419	*C3	R473	*B4	R628	*E4
C210	*D1	C329	*B1	C372	*A2	C429	*B3	C504	*E2	C715	*F2	E400	A1	IC702	G3	Q102	*D4	Q404	C4	R125	*G4	R208	H4	R317	*C2	R361	*E5	R420	C3	R474	*B4	R629	*F5
C219	*D1	C330	*C1	C373	*D5	C430	*C3	C505	*E3	C716	F3	E701	F2	IC703	G2	Q103	*B4	Q471	*B4	R126	*G4	R210	*H4	R318	*B2	R362	*D5	R421	*C4	R475	*A4	R630	F4

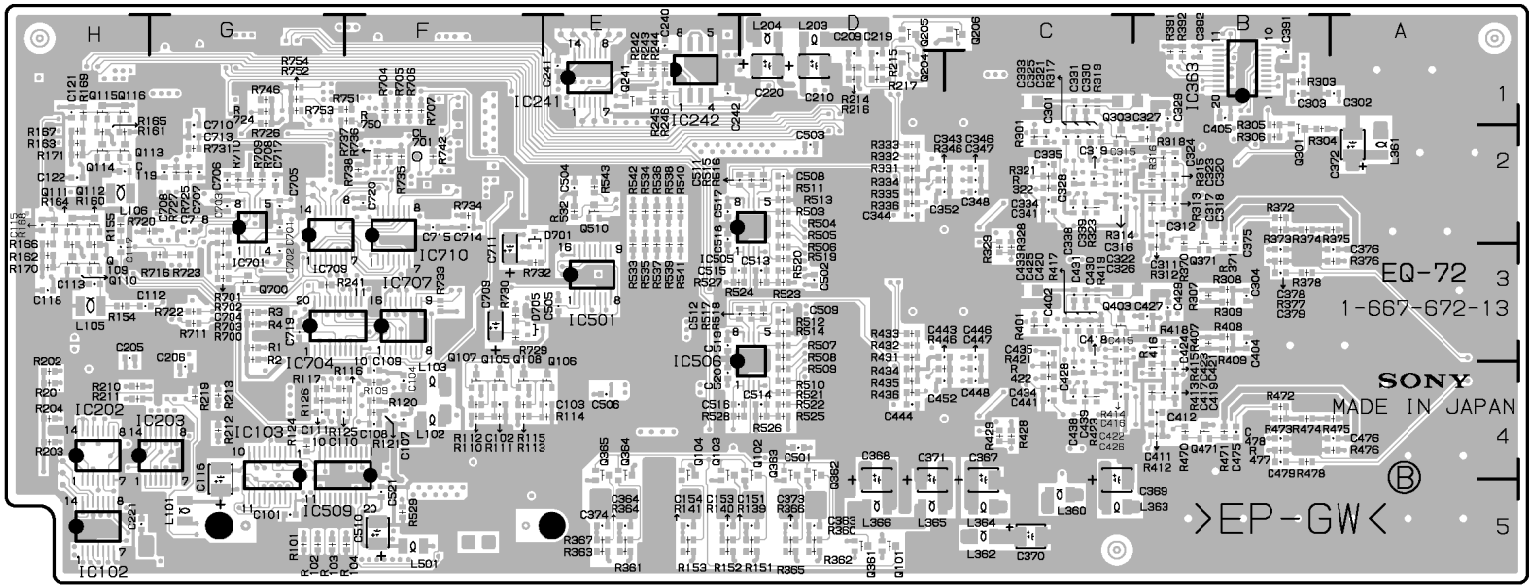

EQ-72 -B SIDE-
SUFFIX: -13

R531	G4	R718	G3	R753	*G1
R532	*E2	R719	G3	R754	*G1
R533	*E3	R720	*H2		
R534	*E2	R721	F3	S701	G1
R535	*E3	R722	*G3		
R536	*E2	R723	*G3	TP103	H3
R537	*E3	R724	*G1	TP201	H1
R538	*E2	R725	*G2	TP202	H2
R539	*E3	R726	*G1	TP301	C2
R540	*E2	R727	*G2	TP401	C4
R541	*E3	R729	*F3	TP701	F3
R542	*E2	R730	*F3	TP702	F3
R543	*E2	R731	*G2		
R700	*G3	R732	*F3	X701	F3
R701	*G2	R733	*F3		
R702	*G2	R734	*F2	*:B SIDE	
R703	*G3	R735	*F2		
R704	*F1	R736	*F2		
R705	*F1	R737	*F2		
R706	*F1	R738	*F2		
R707	*F1	R739	E1		
R708	*G2	R740	E1		
R709	*G2	R741	F1		
R710	*G2	R742	*F2		
R711	*G3	R743	H3		
R712	G3	R744	F3		
R713	G3	R745	F3		
R714	G3	R746	*G1		
R715	F3	R750	*F1		
R716	*G3	R751	*F1		
R717	G3	R752	*G1		

HP-100(1-675-099-11.12)

A3	B2	R10	*A2
		R11	*B1
C1	*A1	R12	*B1
C2	*A1		
C3	*B2	RV1	B2
C4	*B1		
C5	*A2	*:B SIDE	
C6	*A2		
C7	B2		
C8	B2		
C9	*B1		
C10	*B1		
CN8	A1		
CN9	B1		
FL1	*B1		
FL2	*B1		
IC1	A2		
IC2	A2		
R1	A2		
R2	A2		
R3	*B2		
R4	*A2		
R5	*A1		
R6	*A2		
R7	*B2		
R8	*B1		
R9	*A2		

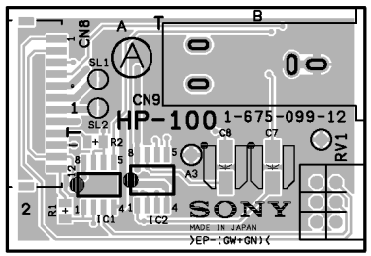

HP-100 -A SIDE-
SUFFIX: -11, 12

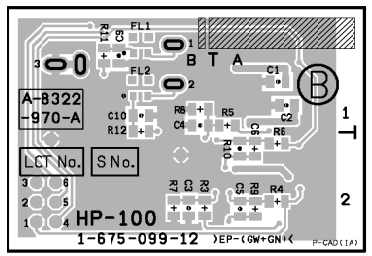

HP-100 -B SIDE-
SUFFIX: -11, 12

MB-757A(1-667-496-12)

CN1	G1
CN8	*E6
CN11	E2
CN12	B2
CN21	E2
CN22	B2
CN31	E3
CN32	B3
CN41	E3
CN42	B3
CN51	E4
CN52	B4
CN61	E4
CN62	B4
CN71	E5
CN72	B5
CN81	E5
CN82	B5
CN91	E6
CN101	*B6
CN201	D1
CN204	*C6
CN301	*D1
CN302	*D2
CN303	*D3
CN401	B1
CN600	F6
CN601	E6
CN700	A4
CN701	A2
CN702	F6
CN704	A1
CN900	G4
CN901	*G1

*:B SIDE

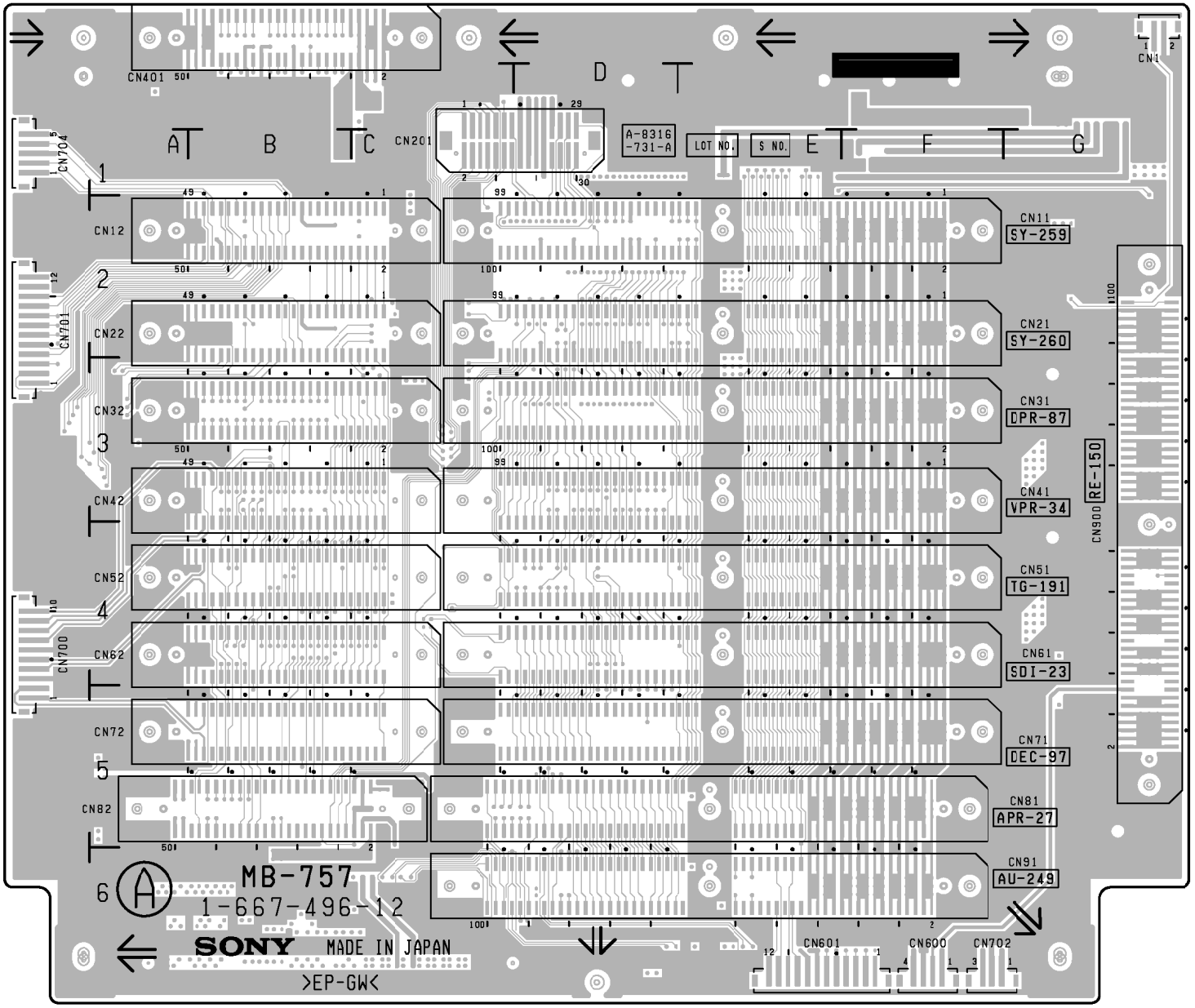

MB-757A -A SIDE-
SUFFIX: -12

DNW-A28
DNW-A23P

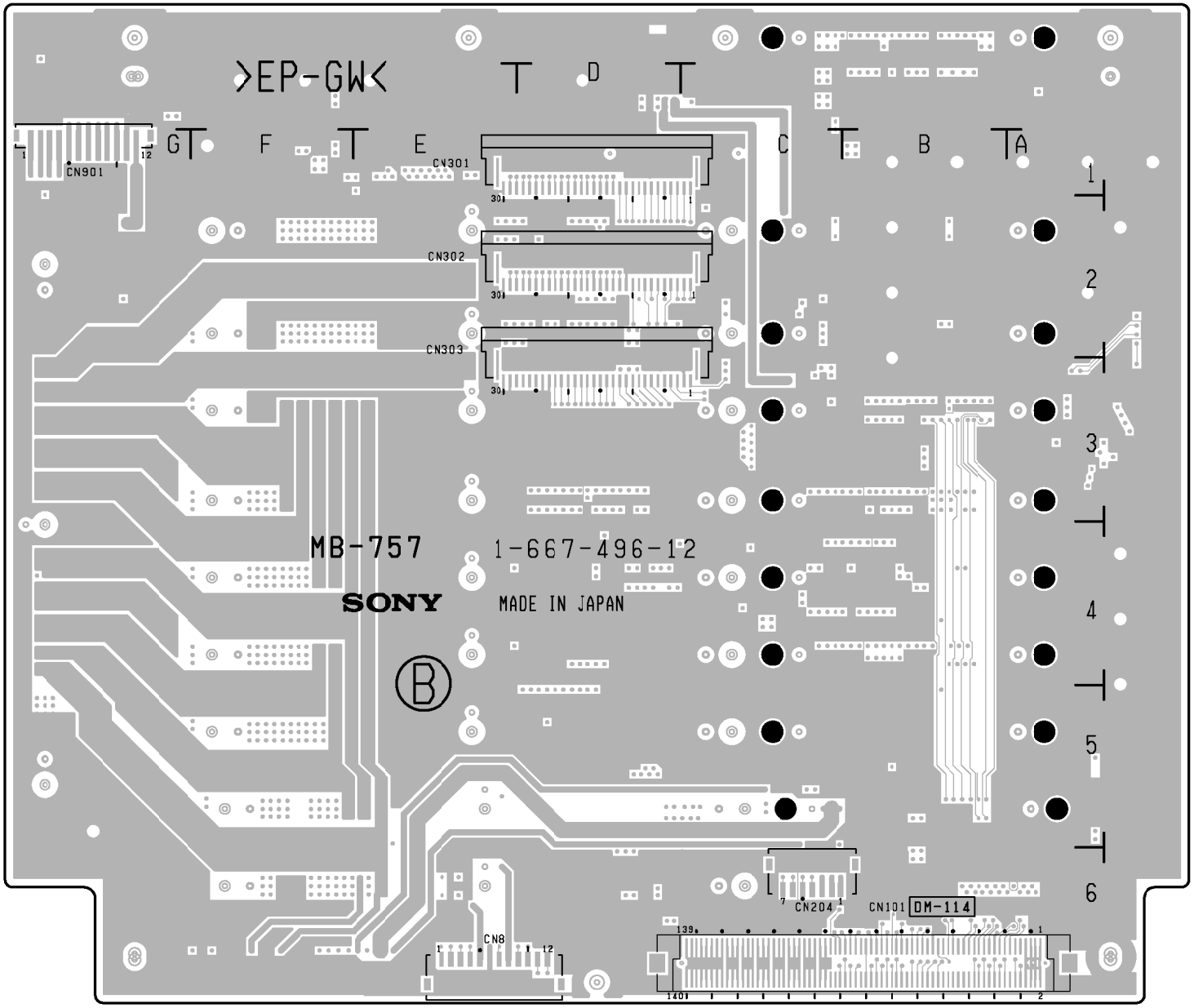

MB-757A -B SIDE-
SUFFIX: -12

PA-218(1-667-852-11)

C800	D1	Q814	C2
C801	C1	Q815	B2
C803	D1	Q816	A2
C804	C1		
C805	D1	R800	E1
C806	C1	R801	D1
C807	D1	R802	D1
C808	B1	R803	D1
C809	D1	R804	D1
C810	C1	R805	D1
C811	D1	R806	D1
C812	C1	R807	D1
C813	C2	R808	D1
C814	D2	R809	D1
C815	C2	R810	B1
C816	E2	R811	D1
C817	C2	R812	B1
C818	E2	R813	D2
C819	C2	R814	E2
C820	E2	R815	C2
C821	E2	R816	D2
C822	C2	R817	C2
C823	E2	R818	E2
C824	C2	R819	C2
C825	E2	R820	E2
C826	C2	R821	E2
C827	D2	R822	D2
C828	C2	R823	E2
C829	B2	R824	C2
C830	A2	R825	E2
C831	B2	R826	D2
C832	A2	R827	E2
		R828	C2
CN1	D1	R829	E2
CN204	A2	R830	C2
CN602	E1	R831	D2
CN900	A1	R832	C2
		R833	D2
D800	D2	R834	B2
		R835	D2
E800	B1	R836	B2
E801	A1	R837	B2
		R838	A2
IC801	D2	R839	D2
IC802	C1	R840	B2
Q800	E1	RV800	D1
Q801	E1	RV801	C1
Q802	E1	RV802	D1
Q803	E2	RV803	C1
Q804	E1	RV804	E1
Q805	E2	RV805	C1
Q806	E2		
Q807	D1	S800	D1
Q808	C1	S801	C1
Q809	C2		
Q810	E2	TP800	A1
Q811	E2	TP801	A1
Q812	C2		
Q813	E2		

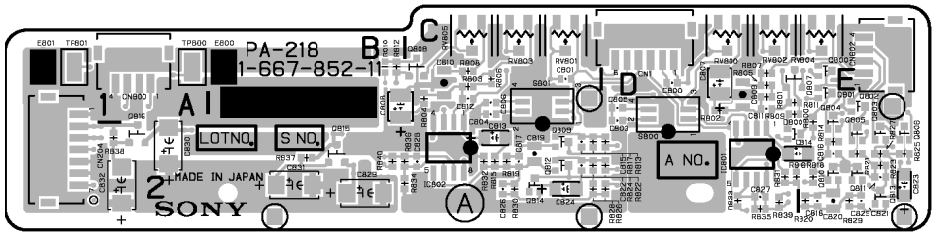

PA-218 -A SIDE-
SUFFIX: -11

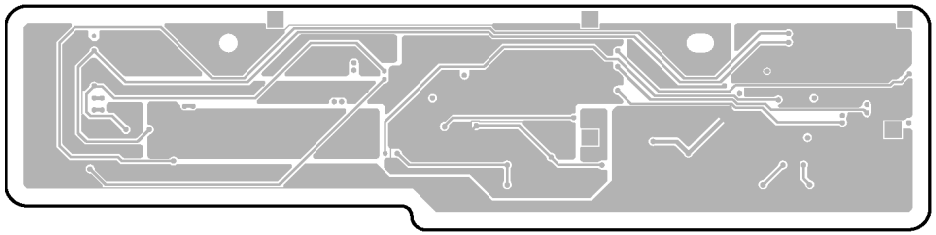

PA-218 -B SIDE-
SUFFIX: -11

RE-150(1-667-484-14)

C1	*A4	C410	G1	D804	*E4	Q202	C2
C2	*A1	C501	D2	D805	*C4	Q203	C2
C3	*A2	C502	*D2	D805	*G4	Q204	*C4
C4	*B4	C503	*D2	D901	*E4	Q213	*D2
C5	*A4	C504	D3			Q301	F2
C6	*A2	C505	*D4	IC1	A4	Q302	F2
C7	*A1	C506	D4	IC2	E2	Q303	F2
C8	B2	C507	*D5	IC3	E2	Q304	*F3
C9	B4	C508	D4	IC4	F2	Q305	*F2
C10	D1	C509	D1	IC5	D2	Q351	F2
C11	*D1	C510	D1	IC6	E2	Q352	G2
C12	*E1	C551	E2	IC7	G2	Q353	F2
C13	*E1	C552	*E2	IC8	C1	Q354	*G3
C14	E1	C553	*E2	IC9	C1	Q355	*G2
C15	E1	C554	E3	IC10	C1	Q401	G2
C16	*A4	C555	*E4	IC11	G4	Q402	G2
C17	F1	C556	E4	IC12	*C1	Q403	G2
C18	*D1	C557	*D5	IC13	*C1	Q404	*G3
C19	D1	C558	D4	IC14	*D1	Q405	*F2
C20	*F1	C559	E1	IC15	*A3	Q501	D2
C21	E2	C560	E1	IC19	*B3	Q502	D2
C22	*E2	C601	C2	IC20	*B3	Q503	D2
C23	A3	C602	*D2	IC21	*A2	Q504	*D3
C24	F1	C603	*D2	IC22	*B2	Q505	*D2
C25	*G1	C604	C3	IC23	*B2	Q551	E2
C26	*G2	C605	*D4	IC101	*E3	Q552	E2
C27	*G1	C606	D4	IC201	*C3	Q553	E2
C28	G1	C607	*D4	IC301	*F3	Q554	*E3
C29	E1	C608	D4	IC351	*F3	Q555	*D2
C30	*A2	C609	*D5	IC401	*G3	Q601	C2
C31	*E1	C610	E1	IC501	*D3	Q602	D2
C32	*A1	C611	E2	IC551	*E3	Q603	D2
C33	B1	C612	E2	IC601	*D3	Q604	*D4
C34	*E1	C701	B3	IC901	*G4	Q605	*E2
C35	F1	C702	*C4	IC902	*B4	Q701	*B4
C36	*F1	C703	C4	IC903	*D4	Q702	*B4
C37	*A1	C704	*D4	IC904	G5	Q703	*B4
C38	*A1	C705	D4		G5	Q704	*B4
C39	*B4	C706	E1			Q705	*E2
C40	*B3	C707	E1	L101	E3	Q801	*D4
C41	*F5	C801	G4	L102	E3	Q802	*D4
C101	E2	C802	*G4	L103	E4	Q803	*F4
C102	*E2	C803	*F4	L201	C3	Q804	*F4
C103	*E2	C804	*G4	L202	C3	Q805	*F4
C104	E3	C900	*G5	L203	C4	Q903	*C4
C105	*E4	C901	E4	L301	F3	Q901	*E4
C106	E4	C902	*E4	L302	F3	Q902	*E4
C107	*E5	C903	D4	L303	E4	Q904	*F4
C108	E4	C904	*E4	L304	F4	Q905	*F4
C109	F1	C905	*G4	L351	G3	Q907	*F5
C110	F2	C906	G5	L352	F3	Q921	*G4
C201	C2	C907	G5	L353	F4		
C202	*C2			L354	G4	R1	*A4
C203	*C2	CN1	C1	L401	G3	R2	*A4
C204	C3	CN2	A3	L402	G3	R3	*A4
C205	*C4	CN3	B3	L403	G4	R4	*B2
C206	C4	CN4	B2	L501	D3	R5	*B4
C207	*C4	CN900	E5	L502	D3	R6	*A4
C208	C4			L503	D4	R7	*A3
C209	*D5	D1	*B1	L504	D4	R8	*A4
C210	D1	D2	B2	L551	E3	R9	*A3
C211	D2	D3	*B1	L552	E3	R10	*A4
C212	D2	D4	*A1	L553	E4	R11	*B2
C301	F2	D5	*A1	L554	E4	R12	B4
C302	*F2	D6	*A2	L601	D3	R14	*B4
C303	*F2	D7	*B1	L602	D3	R15	*B4
C304	F3	D8	*B1	L603	C4	R16	*B4
C305	*F4	D9	*A4	L701	B3	R17	*A2
C306	F4	D10	B2	L702	B4	R18	*A1
C307	*E5	D11	*B3			R19	*A1
C308	E4	D12	B1	Q1	*B1	R20	*B1
C310	F1	D13	*B2	Q2	*A3	R21	*A3
C311	F1	D101	*E2	Q3	*A2	R22	B2
C351	F2	D102	*E2	Q4	*B1	R23	*A3
C352	*G2	D201	*C2	Q5	*B1	R24	*A3
C353	*G2	D202	*C2	Q6	*A1	R25	*A1
C354	F3	D301	*F2	Q7	*B4	R26	*A1
C355	*F4	D302	*F2	Q10	*A3	R27	*A1
C356	F4	D351	*F2	Q11	*A3	R28	*A3
C357	*E5	D352	*F2	Q15	*A1	R29	*A3
C358	F4	D401	*G2	Q16	*A3	R30	*D1
C359	F1	D402	*G2	Q17	*A3	R31	*G2
C360	G2	D501	*D2	Q24	*B2	R32	F2
C401	G2	D502	*D2	Q25	*A4	R33	*G1
C402	*G2	D551	*E2	Q26	*G2	R34	*E1
C403	*G2	D552	*E2	Q27	B4	R35	*E1
C404	G3	D601	*D2	Q101	E2	R38	*A3
C405	*G4	D602	*D2	Q102	E2	R39	*A3
C406	G4	D701	*C4	Q103	E2	R40	*B4
C407	*E5	D801	*E4	Q104	*E3	R41	*A4
C408	G4	D802	*E4	Q105	*F2	R42	*A4
C409	F1	D803	*D4	Q201	C2	R43	*A4

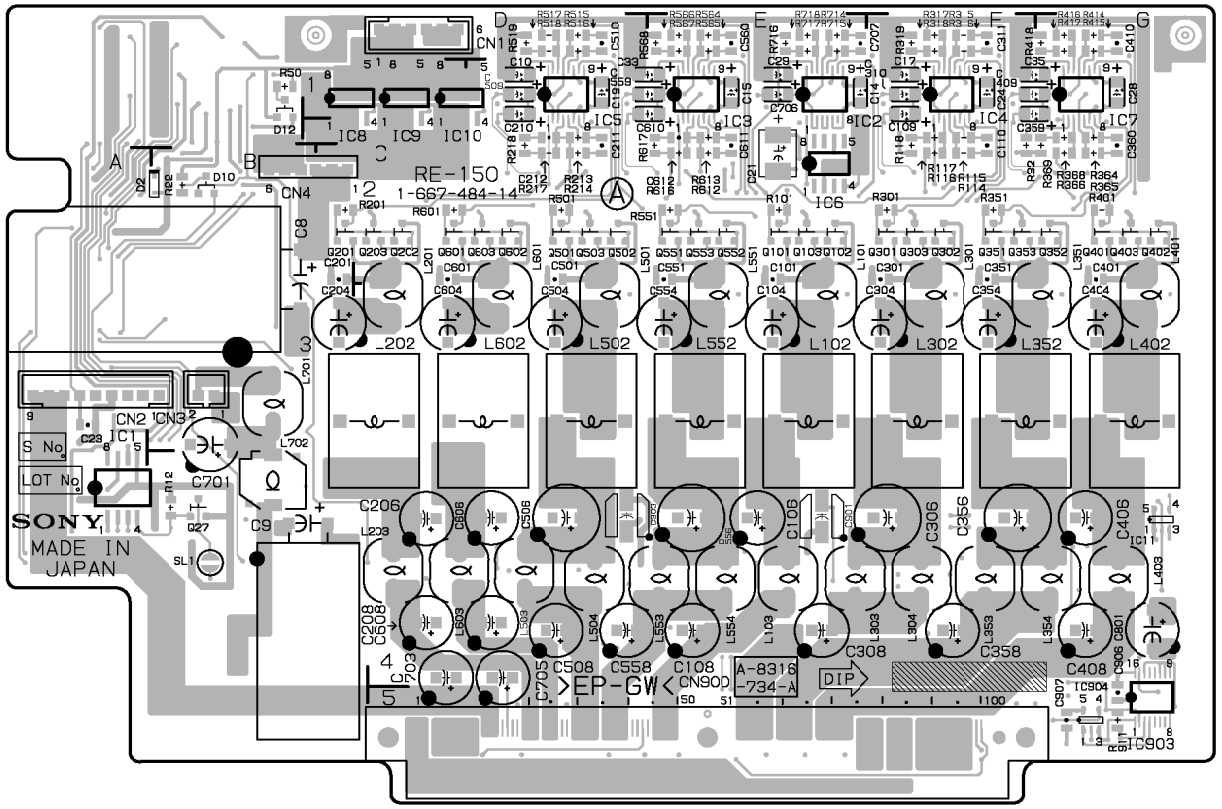

RE-150 -A SIDE-
SUFFIX: -14

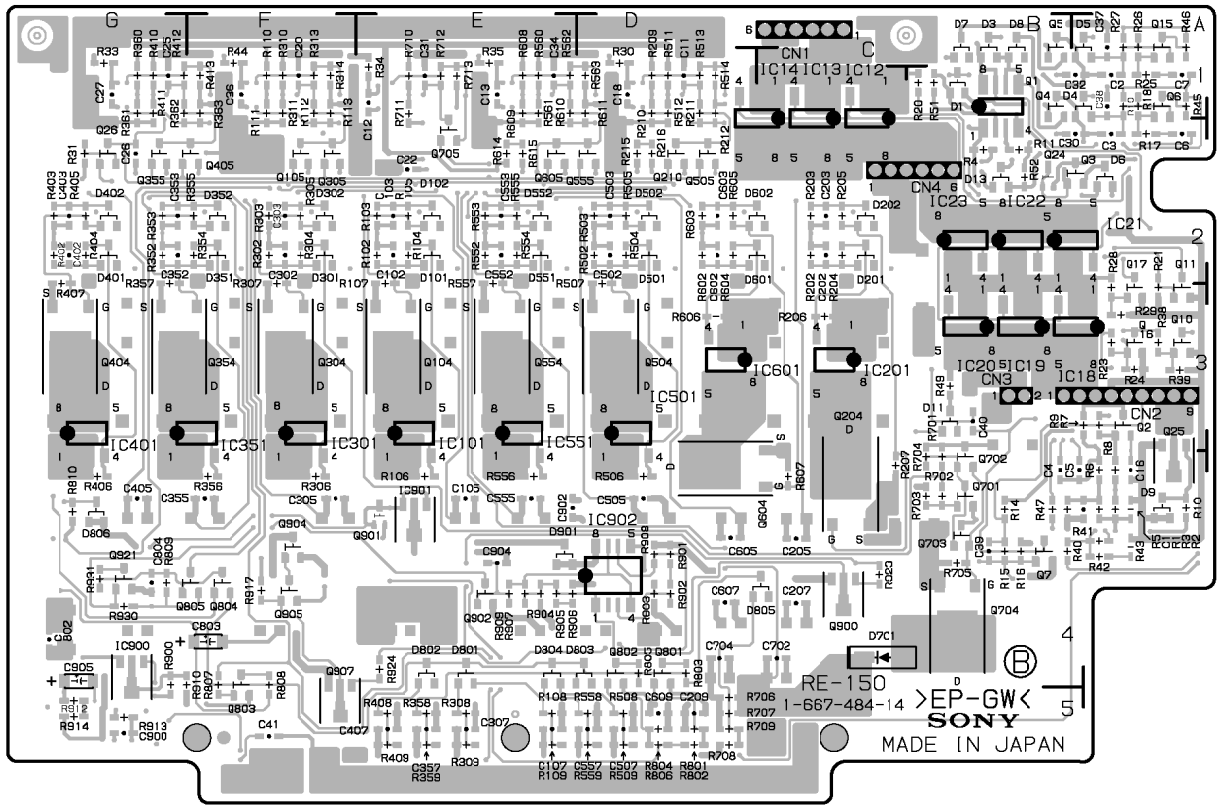

RE-150 -B SIDE-
SUFFIX: -14

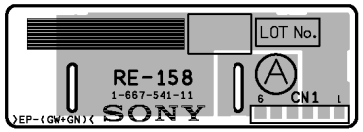

RE-158 -A SIDE-
SUFFIX: -11

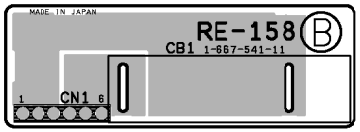

RE-158 -B SIDE-
SUFFIX: -11

R44	*F1	R414	G1	R906	*E4
R45	*A1	R415	G1	R907	*E4
R46	*A1	R416	G1	R908	*D4
R47	*B4	R417	G1	R909	*E4
R49	*B3	R418	G1	R910	*G4
R50	B1	R501	D2	R911	G5
R51	*B1	R502	*D2	R912	*G5
R52	*B2	R503	*D2	R913	*G5
R101	B2	R504	*D2	R914	*G5
R102	*E2	R505	*D2	R917	*F4
R103	*E2	R506	*D4	R923	*C4
R104	*E2	R507	*D2	R924	*E4
R105	*E2	R508	*D5	R930	*G4
R106	*E4	R509	*D5	R931	*G4
R107	*E2	R511	*D1		
R108	*E5	R512	*D1	SL1	B4
R109	*E5	R513	*D1		
R110	*F1	R514	*D1	*:B SIDE	
R111	*F1	R515	D1		
R112	*F1	R516	D1		
R113	*F1	R517	D1		
R114	F2	R518	D1		
R115	F2	R519	D1		
R116	F2	R551	E2		
R117	F2	R552	*E2		
R118	F2	R553	*E2		
R201	C2	R554	*E2		
R202	*C2	R555	*E2		
R203	*C2	R556	*E4		
R204	*C2	R557	*E2		
R205	*C2	R558	*D5		
R206	C3	R559	*D5		
R207	*C4	R560	*E1		
R209	*D1	R561	*E1		
R210	*D1	R562	*E1		
R211	*D1	R563	*D1		
R212	*D1	R564	E1		
R213	D2	R565	E1		
R214	D2	R566	E1		
R215	*D2	R567	E1		
R216	*D2	R568	E1		
R217	D2	R601	C2		
R218	D2	R602	*D2		
R301	F2	R603	*D2		
R302	*F2	R604	*D2		
R303	*F2	R605	*D2		
R304	*F2	R606	*D3		
R305	*F2	R607	*C4		
R306	*F4	R608	*E1		
R307	*F2	R609	*E1		
R308	*E5	R610	*E1		
R309	*E5	R611	*D1		
R310	*F1	R612	E2		
R311	*F1	R613	E2		
R313	*F1	R614	*E2		
R314	*F1	R615	*E2		
R315	F1	R616	E2		
R316	F1	R617	E2		
R317	F1	R701	*B4		
R318	F1	R702	*B4		
R319	F1	R703	*B4		
R351	F2	R704	*B4		
R352	*G2	R705	*B4		
R353	*G2	R706	*D5		
R354	*F2	R707	*D5		
R355	*F2	R708	*D5		
R356	*F4	R709	*D5		
R357	*G2	R710	*E1		
R358	*E5	R711	*E1		
R359	*E5	R712	*E1		
R360	*G1	R713	*E1		
R361	*G1	R714	E1		
R362	*G1	R715	E1		
R363	*F1	R716	E1		
R364	G2	R717	E1		
R365	G2	R718	E1		
R366	G2	R801	*D5		
R368	G2	R802	*D5		
R369	G2	R803	*D4		
R401	G2	R804	*D5		
R402	*G2	R805	*D4		
R403	*G2	R806	*D5		
R404	*G2	R807	*F4		
R405	*G2	R808	*F4		
R406	*G4	R809	*G4		
R407	G2	R810	*G4		
R408	*E5	R900	*G4		
R409	*E5	R901	*D4		
R410	*G1	R902	*D4		
R411	*G1	R903	*D4		
R412	*G1	R904	*E4		
R413	*F1	R905	*E4		

SDI-23(1-667-485-12)

C1	*A5	C304	*A2	C715	G2	E1	B4
C2	A4	C305	*A3	C715	*G1	E2	C1
C3	A5	C306	*A3	C717	*G1	E3	E1
C4	A4	C307	C1	C719	G1	E4	H5
C5	A3	C308	C1	C719	*G2	E5	*A1
C6	A4	C350	*E4	C720	*G2	E6	*B5
C100	A1	C351	*E4	C721	*G1	E7	*H1
C101	C1	C352	*D4	C722	*G2	E8	*G5
C102	*C1	C353	E5	C723	G1		
C103	*A1	C354	*E4	C724	*G1	FB100	*A2
C104	*C2	C355	*D3	C725	G1	FB101	*A2
C105	*C1	C356	*D3	C726	H1	FB102	*A1
C106	A2	C357	*D5	C727	H1	FB103	*A1
C107	*B1	C358	E3	C728	*F1	FB104	*B1
C108	A2	C359	*D3	C729	G1	FB105	*B1
C109	*C1	C360	*34	C730	*G1	FB106	E1
C110	*B2	C361	*33	C731	*F1	FB107	*B1
C111	*C1	C362	*34	C732	*G1	FB108	*B2
C112	B1	C363	*34	C733	G1	FB450	*D2
C113	A1	C364	*D4	C734	*G2	FB451	*E1
C114	A2	C365	*E3	C735	*G2	FB700	H2
C115	*B2	C400	*D3	C736	*G1	FB701	*H2
C116	*B1	C401	*D2	C737	G1	FB702	*G1
C117	*A1	C407	*C1	C738	*G2	FB703	*G2
C118	*B1	C408	*D2	C739	*G2	FB704	*G1
C119	A2	C409	*D2	C740	G1	FB705	*G2
C120	*B1	C410	*D1	C741	F1	FB706	*F1
C121	B1	C411	*D1	C742	*G1	FB707	P2
C122	*B1	C412	*D1	C743	*G2		
C123	*B2	C450	*E1	C744	G1	IC100	*A1
C124	*B1	C451	*E1	C745	G1	IC101	*C1
C125	*A1	C452	*E2	C746	F1	IC102	B1
C126	A1	C453	*E1	C747	*F2	IC103	*B2
C127	A1	C454	*E2	C748	F2	IC104	*C2
C128	A1	C455	*D2	C749	*H1	IC200	*F1
C129	*B1	C456	*E2	C800	*A5	IC201	*A2
C130	A1	C457	*E2	C801	*B4	IC202	*B2
C131	*A1	C458	*E2	C802	*B5	IC203	*B3
C132	*B1	C459	D2	C803	*A4	IC204	*F1
C133	*B2	C460	*E2	C804	*B4	IC205	C2
C134	*B2	C461	*E2	C805	*A4	IC206	*F1
C135	*B1	C462	*E2	C806	*B3	IC207	*E1
C136	*B1	C463	*D2	C807	*B4	IC208	*A3
C137	*B2	C464	*E1	C808	*B4	IC209	*A2
C138	B1	C465	*E1	C809	*B3	IC210	*B3
C139	B1	C466	*E1	C810	*B3	IC211	*C3
C140	B1	C467	*E1	C811	*B3	IC212	*B3
C141	*B1	C468	*E1	C812	*D3	IC250	C4
C142	*B2	C469	*E1	C813	*D3	IC252	*C4
C143	*C2	C500	*H3			IC253	*B4
C144	*B2	C501	*H4	CL100	A1	IC254	*C4
C145	*B2	C502	*H4	CL101	A1	IC255	*C4
C146	*C2	C503	*H3	CL102	*C3	IC256	*C4
C147	A1	C504	*F4	CL103	*C2	IC300	*C4
C200	*A2	C505	*F5	CL200	E1	IC301	A2
C201	*E2	C506	*35	CL300	*A2	IC302	*A3
C202	*B3	C507	*34	CL301	*A2	IC303	*C1
C203	*C3	C508	*F3	CL450	*D2	IC304	*C1
C204	*F1	C509	*F3	CL550	*32	IC350	*E5
C205	*C2	C550	H5	CL551	*32	IC351	*E5
C206	*B2	C551	H5	CL552	*32	IC352	D4
C207	*E1	C552	*33	CL553	*32	IC353	*F4
C208	*A3	C553	*H3	CL554	*32	IC354	*F3
C209	*E1	C554	*H2	CL555	*32	IC355	*E3
C210	*A3	C555	*32	CL556	*32	IC356	*D4
C211	*A2	C556	*H2	CL557	*32	IC400	D2
C212	*E1	C557	*H2	CL558	*32	IC406	D1
C213	*A3	C558	*H2	CL559	*H2	IC407	*D1
C214	E1	C559	*32	CL560	*32	IC438	*C1
C215	*A3	C560	*32	CL700	*31	IC450	*E1
C216	*A2	C600	*H4			IC451	*E2
C217	*B3	C601	*F3	CN61	C5	IC452	*E2
C218	*C3	C602	*32	CN62	G5	IC453	*E1
C219	*B3	C603	*F2	CN100	A1	IC454	*E1
C250	*B4	C604	*F2	CN101	C1	IC455	E2
C251	*C5	C605	*F2	CN700	H1	IC456	*D2
C252	*C5	C606	*32	CN701	F1	IC457	E1
C253	*C4	C607	*F2			IC500	*H4
C254	*B3	C700	H1	D200	*F1	IC501	*H4
C255	*B3	C701	H2	D201	*E1	IC502	*H4
C256	*C4	C702	H1	D300	*C1	IC503	F4
C257	*B4	C703	H1	D301	*C1	IC550	*H5
C258	*C4	C704	H1	D302	*C1	IC551	*G5
C259	*B5	C705	*H2	D303	*D1	IC552	H2
C260	*C5	C706	H1	D304	*D1	IC553	*H2
C261	*C4	C707	*31	D305	*D1	IC554	*H2
C262	*C3	C708	*32	D450	*E2	IC555	*H2
C263	*C4	C709	H1	D451	*E1	IC556	*G2
C264	*B4	C710	*F1	D452	*E1	IC557	*G2
C300	*C3	C711	*32	D453	*E1	IC600	H4
C301	*A3	C712	*32	D800	*D1	IC601	F2
C302	*B2	C713	H1	D801	*D1	IC602	*G2
C303	*A2	C714	*31			IC603	*F2

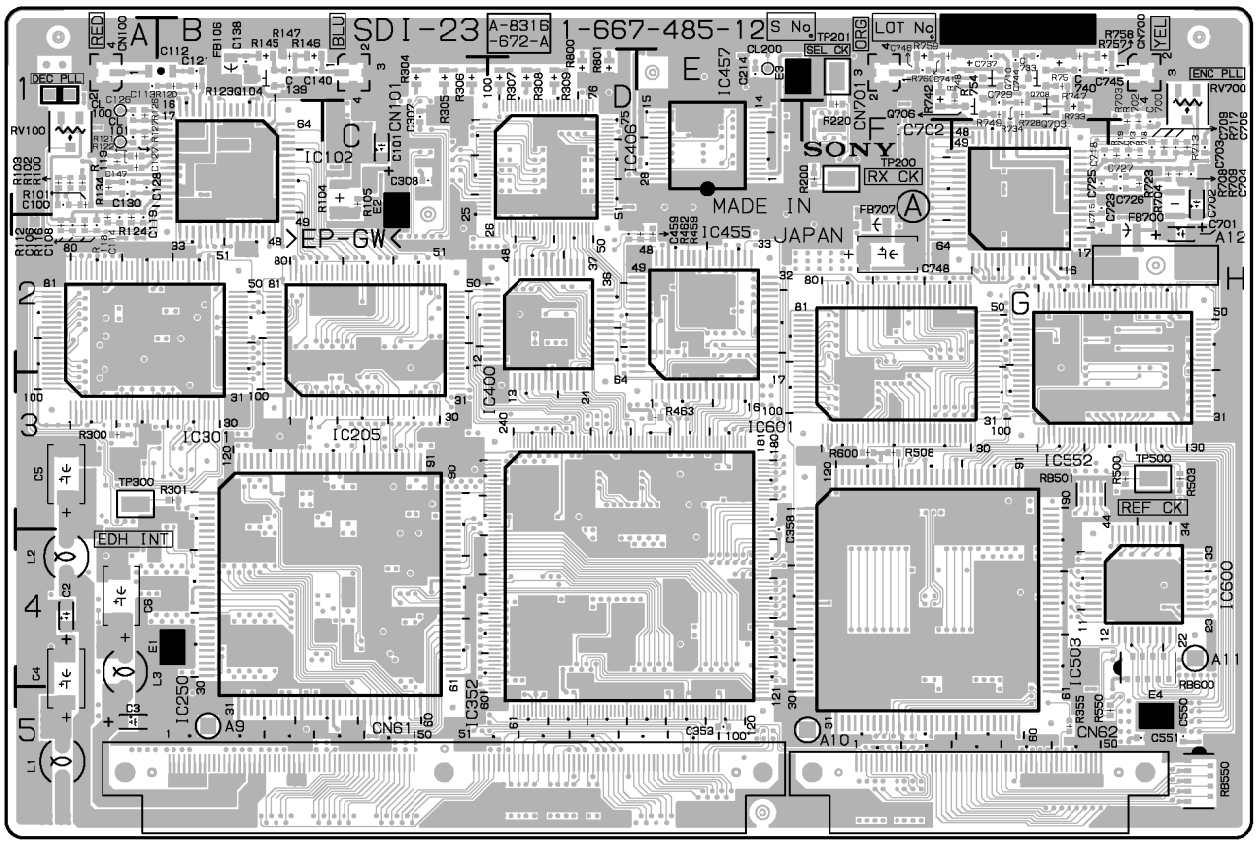

SDI-23 -A SIDE-
SUFFIX: -12

http://getMANUAL.com

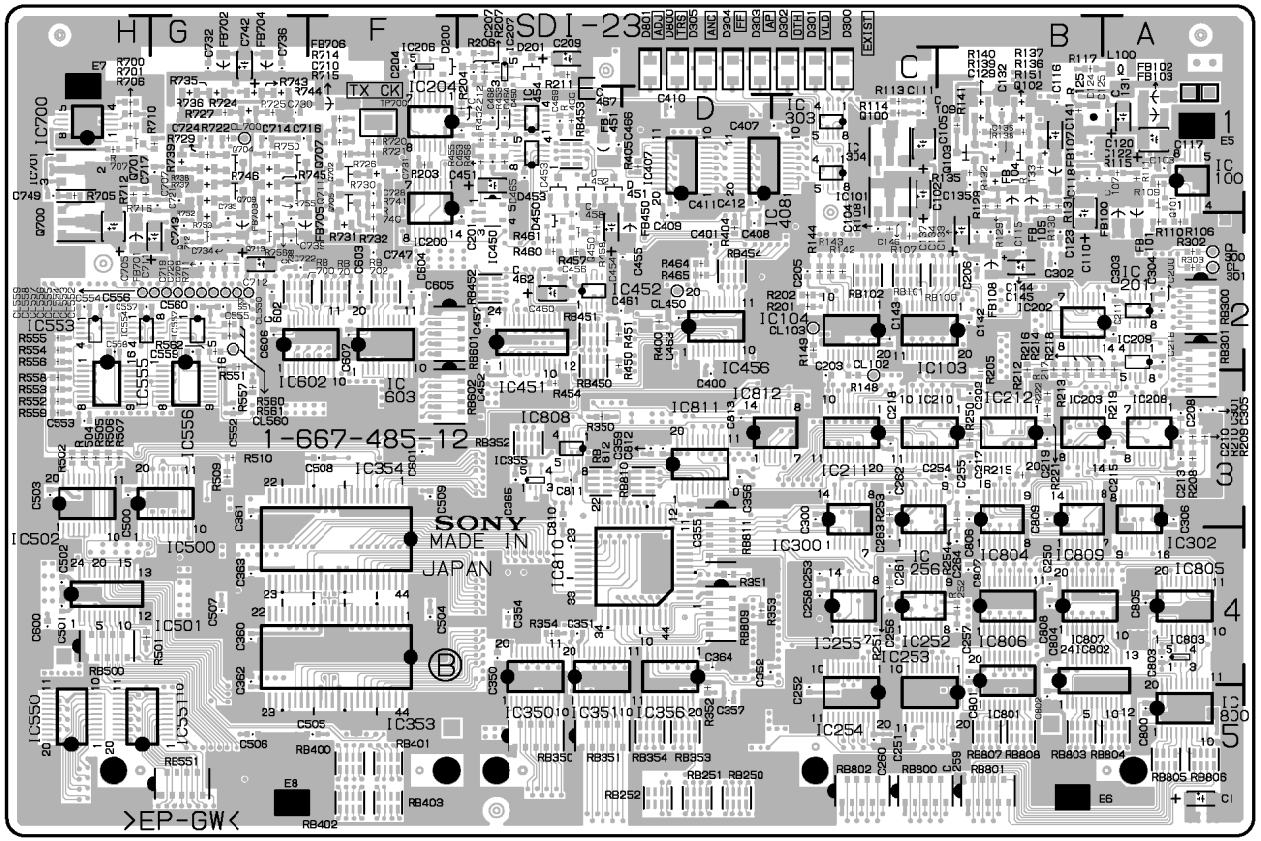

SDI-23 -B SIDE-
SUFFIX: -12

IC700	*H1	R151	*B1	R703	H1	RB800	*C5
IC701	*H1	R200	F1	R704	H1	RB801	*B5
IC702	G1	R201	*C2	R705	*H1	RB802	*C5
IC800	*A5	R202	*C2	R706	*H1	RB803	*B5
IC801	*B5	R203	*F1	R707	*H1	RB804	*A5
IC802	*B5	R204	*E1	R708	H1	RB805	*A5
IC803	*A4	R205	*B3	R709	H1	RB806	*A5
IC804	*B4	R206	*E1	R710	*G1	RB807	*B5
IC805	*A4	R207	*E1	R711	*G2	RB808	*B5
IC806	*B4	R208	*A3	R712	*H1	RB809	*D4
IC807	*B4	R209	*A3	R713	H1	RB810	*D3
IC808	*E3	R210	*A3	R714	*F1	RB811	*D4
IC809	*B4	R211	*E1	R715	*F1	RB812	*E3
IC810	*D4	R212	*B2	R716	*H1		
IC811	*D3	R213	*B2	R717	H1	RV100	A1
IC812	*D3	R214	*B2	R718	H1	RV700	H1
		R215	*B3	R719	H1		
L1	A5	R216	*B2	R720	*F1	TP200	F1
L2	A4	R217	*B2	R721	*F1	TP201	F1
L3	A4	R218	*A2	R722	*G1	TP300	A3
L100	*A1	R219	*A2	R723	H1	TP500	H3
		R220	F1	R724	*G1	TP700	*F1
Q100	*C1	R221	*B3	R725	*G1		
Q101	*A1	R222	*B3	R726	*F1	*:B SIDE	
Q102	*B1	R250	*B3	R727	*G1		
Q103	*B1	R251	*C4	R728	G1		
Q104	B1	R252	*B4	R729	*G1		
Q450	*E2	R253	*C3	R730	*F1		
Q700	*H2	R254	*B3	R731	*F2		
Q701	*H1	R300	A3	R732	*F2		
Q702	*F1	R301	B3	R733	G1		
Q703	G1	R302	*A2	R734	G1		
Q704	*G1	R303	*A2	R735	*G1		
Q705	*F1	R304	C1	R736	*G1		
Q706	G1	R305	C1	R737	*G1		
Q707	*G1	R306	C1	R738	*G1		
Q708	G1	R307	D1	R739	*G1		
Q709	*G1	R308	D1	R740	*F2		
Q710	G1	R309	D1	R741	*F1		
Q711	*G1	R350	*E3	R742	F1		
Q712	*G2	R351	*D4	R743	*G1		
Q713	*G2	R352	*D5	R744	*G1		
		R353	*D4	R745	*G1		
R100	A1	R354	*E4	R746	*G1		
R101	A1	R355	G5	R747	G1		
R102	A1	R400	*D2	R748	G1		
R103	A1	R404	*D2	R749	G1		
R104	C1	R405	*D1	R750	*G1		
R105	C1	R450	*E2	R751	G1		
R106	*A2	R451	*E2	R752	*G1		
R107	*C2	R452	*E1	R753	*G2		
R108	*C2	R453	*E1	R754	G1		
R109	*A1	R454	*E3	R755	*G1		
R110	*A2	R455	*E1	R756	*G2		
R111	*A1	R456	*E1	R757	G1		
R112	A2	R457	*E2	R758	G1		
R113	*C1	R458	*E2	R759	F1		
R114	*C1	R459	E2	R760	F1		
R115	*A1	R460	*E2	R800	D1		
R116	A2	R461	*E2	R801	D1		
R117	*B1	R462	E2				
R118	A2	R463	E3	RB100	*B2		
R119	A1	R464	*D2	RB101	*C2		
R120	B1	R465	*D2	RB102	*C2		
R121	A1	R466	*E1	RB250	*D5		
R122	A1	R500	H3	RB251	*D5		
R123	B1	R501	*H4	RB252	*D5		
R124	A2	R502	*H3	RB300	*A2		
R125	*B1	R503	H3	RB301	*A2		
R126	A1	R504	*H3	RB350	*B5		
R127	A1	R505	*H3	RB351	*B5		
R128	*B1	R506	*H3	RB352	*E3		
R129	*B1	R507	*H3	RB353	*D5		
R130	*B1	R508	F3	RB354	*D5		
R131	*B1	R509	*G3	RB400	*F5		
R132	*B1	R510	*G3	RB401	*F5		
R133	*B1	R550	H5	RB402	*F5		
R134	A1	R551	*G2	RB403	*F5		
R135	*B1	R552	*H3	RB450	*E2		
R136	*B1	R553	*H3	RB451	*E2		
R137	*B1	R554	*H2	RB452	*E2		
R138	*B1	R555	*H2	RB453	*E1		
R139	*B1	R556	*H2	RB454	*D2		
R140	*B1	R557	*G3	RB500	*H4		
R141	*B1	R558	*H3	RB501	G3		
R142	*C2	R559	*H3	RB550	H5		
R143	*C2	R560	*G2	RB551	*G5		
R144	*C2	R561	*G2	RB600	H4		
R145	B1	R562	*G2	RB601	*F2		
R146	B1	R600	F3	RB602	*F3		
R147	B1	R700	*H1	RB700	*G2		
R148	*C3	R701	*H1	RB701	*F2		
R149	*C2	R702	H1	RB702	*F2		

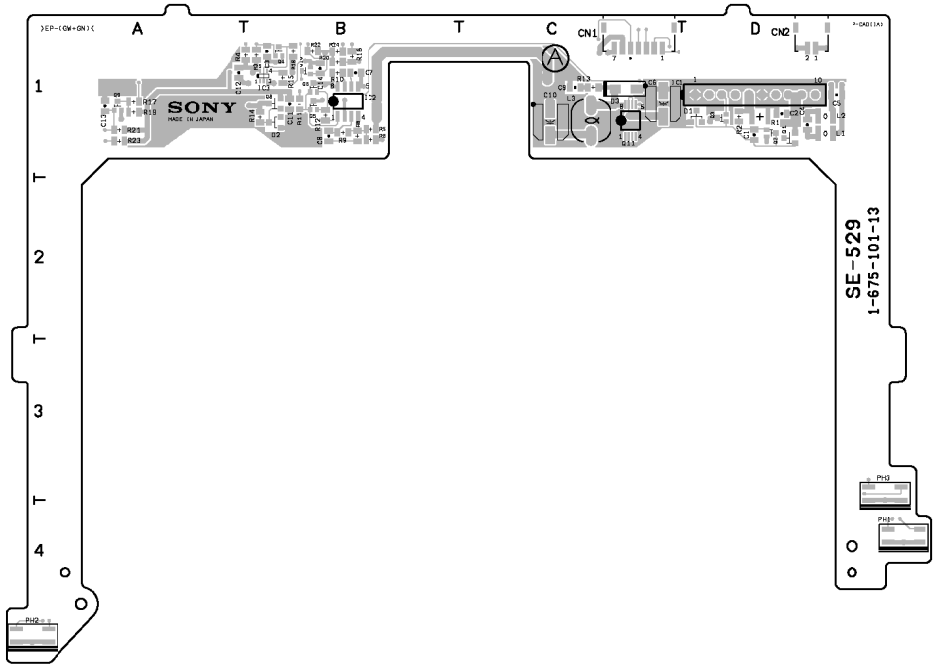

SE-529 -A SIDE-
SUFFIX: -12, 13

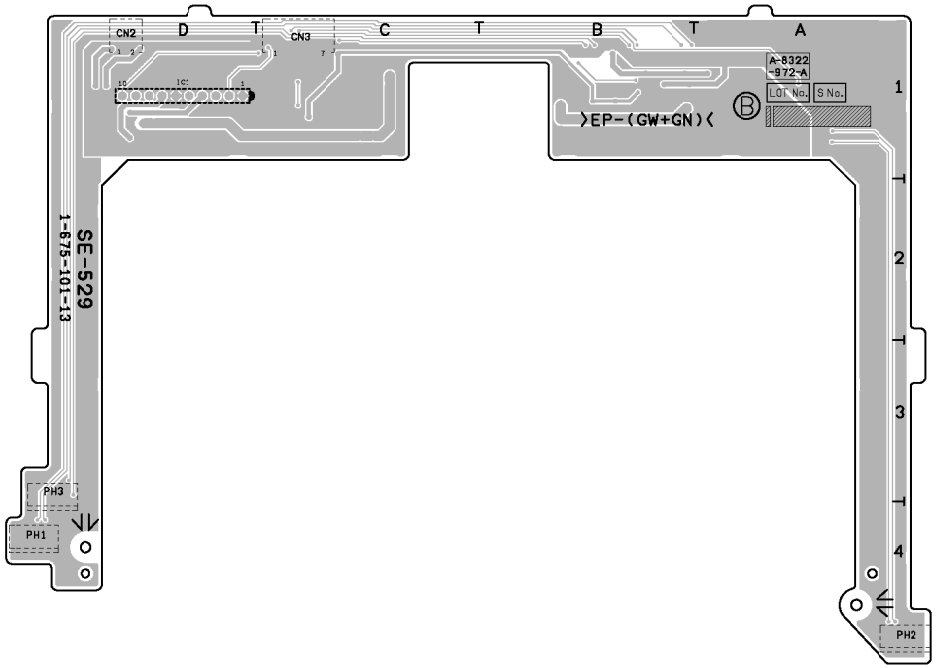

SE-529 -B SIDE-
SUFFIX: -12, 13

SE-529(1-675-101-12,13)

C1	D1	IC2	B1	R2	D1
C2	D1	IC3	B1	R3	B1
C3	B1			R4	B1
C4	D1	L1	D1	R5	B1
C5	D1	L2	D1	R6	B1
C6	C1	L3	C1	R8	B1
C7	B1			R9	B1
C8	B1	PH1	D4	R10	B1
C9	C1	PH2	A4	R11	B1
C10	C1	PH3	D3	R12	B1
C11	B1			R13	C1
C12	A1	Q1	D1	R14	B1
C13	A1	Q2	D1	R15	B1
C14	B1	Q3	D1	R16	B1
		Q4	B1	R17	A1
CN1	C1	Q5	B1	R18	B1
CN2	D1	Q6	B1	R19	A1
		Q8	B1	R20	B1
D1	D1	Q9	A1	R21	A1
D2	B1	Q10	B1	R22	B1
D3	C1	Q11	C1	R23	A1
				R24	B1
IC1	D1	R1	D1		

SV-194A(1-667-487-17)

C1	G2	C409	*G5	C705	G7	D102	G5	IC402	C7	Q603	F3	R134	F6
C2	F2	C410	*G4	C706	F8	D103	E6	IC403	D8	Q604	B1	R135	F7
C3	F2	C411	*G4	C707	*F8	D104	E6	IC404	*G3	Q605	B1	R136	F7
C4	F2	C412	*G5	C710	G7	D106	E6	IC405	G5	Q606	B1	R137	F7
C5	F1	C413	G3	C711	*F7	D107	*G1	IC407	*G3	Q607	F3	R138	F7
C6	F2	C414	G3	C712	F8	D108	*G1	IC408	*G4	Q608	F3	R139	E7
C7	G2	C415	G3	C713	*F8	D109	*G1	IC409	G3	Q609	C3	R140	E7
C8	E2	C416	G4	C714	F8	D200	B6	IC411	*G4	Q610	B3	R141	E7
C9	F2	C417	G4	C715	*F8	D201	*G1	IC412	*G3	Q611	B3	R142	D6
C10	F2	C418	F3	C716	*F8	D400	D7	IC500	A5	Q612	B3	R143	G1
C11	E1	C419	G4	C717	*E7	D401	G3	IC501	B1	Q613	C3	R144	G1
C14	E1	C420	G3	C718	*E7	D402	G4	IC502	B2	Q614	B1	R145	C6
C17	F1	C421	G3	C719	*F8	D403	G4	IC503	B1	Q615	C3	R146	D5
C100	E6	C422	*G3	C720	*F8	D404	F3	IC504	C2	Q616	B1	R147	E7
C101	E6	C423	*G4	C721	*F8	D500	C2	IC505	*B8	Q617	G7	R148	E7
C102	E6	C424	G3	C722	E7	D501	C1	IC600	E3	Q618	G6	R149	D5
C103	E6	C425	D7	C723	F8	D502	C2	IC601	F3	Q619	G8	R150	C8
C104	E6	C500	B1	C724	E7	D503	C2	IC602	B1	Q621	G8	R151	F4
C105	E6	C501	B2	C725	E8	D600	C1	IC603	B3	Q622	B4	R153	C6
C106	*G5	C502	B1	C726	*E8	D601	F3	IC604	B4	Q700	G7	R154	D6
C107	E6	C503	B2	C727	E8	D602	B3	IC605	G7	Q701	G7	R156	*G5
C108	F6	C504	C2	C728	D8	D603	B1	IC606	G8	Q702	G7	R157	E7
C109	E6	C505	C2	C729	C8	D605	G8	IC700	G7	Q703	F8	R200	A5
C110	*E6	C506	B1	C730	D8	D606	G8	IC701	G7	Q704	F8	R201	B7
C111	*F5	C507	B1	C731	D8	D607	G7	IC702	*F8	Q705	E8	R202	B7
C112	F5	C508	C1	C732	D8	D608	B4	IC703	F8	Q706	E8	R203	A5
C113	F6	C509	B2	C733	C8	D609	G6	IC704	*F8	Q707	E8	R204	A5
C114	*F7	C510	*C1	C734	C8	D610	G7	IC705	*F8	Q708	E8	R205	B5
C115	E6	C511	C1	C735	C8	D611	B3	IC706	*F8	Q709	D7	R206	B5
C116	C6	C512	C2	C736	B8	D612	B3	IC707	F8	Q710	D8	R207	B5
C117	*E5	C513	C1	C737	*F7	D613	G8	IC708	E8	Q711	G7	R208	B5
C118	D7	C514	B2	C900	B4	D700	F8	IC709	*F8	Q712	E8	R209	A5
C119	E7	C515	B2	C901	A5	D702	E8	IC710	E7	Q900	A4	R210	B5
C120	D5	C516	C2	C902	A5	D950	G2	IC711	D8	Q901	A4	R211	B5
C121	D5	C517	C2	C903	B5	D951	G2	IC712	C8	Q950	G2	R212	A5
C122	D5	C518	*C1	C904	A4	D952	A2	IC900	B4	Q951	G2	R213	B6
C123	*E6	C519	C2	C905	B5	D953	A2	IC901	A4	Q952	G2	R214	B6
C124	*E6	C520	C2	C906	B4			IC902	A4	Q953	G2	R215	B6
C125	E7	C521	B7	C907	A4	E100	F4	IC903	B4	Q954	G2	R216	B6
C126	*G5	C522	B8	C909	B4	E101	G6	IC904	B4	Q955	A2	R217	B6
C127	F6	C523	*B8	C950	G2	E102	A6			Q956	A2	R218	B6
C128	*E6	C524	B8	C951	G2	E103	D5	L1	G2	Q957	A2	R219	B6
C129	D5	C525	B8	C952	G2	E200	*A4	L2	E2	Q958	B2	R220	B5
C200	B7	C526	*B8	C953	G2	E201	*A3	L3	F2	Q959	B2	R221	B5
C201	B7	C527	C7	C954	G2	E400	*G3	L4	F2			R222	B5
C202	B5	C528	C6	C955	G2	E500	A3	L5	E2	R1	F1	R223	B5
C203	B5	C600	E3	C956	G2	E700	*G6	L400	G3	R4	C1	R224	C6
C204	B5	C601	E3	C957	A2	E900	A4	L401	G3	R5	C1	R225	C6
C205	B6	C602	E3	C958	A1	E950	G3	L500	A1	R6	F1	R226	B5
C206	C5	C603	E3	C959	B2	E951	A2	L501	B8	R7	F1	R227	B5
C207	B6	C604	E3	C960	B2			L600	F4	R8	F1	R228	*G4
C208	B6	C605	E3	C961	B2	IC1	F1	L601	F3	R10	C1	R229	B6
C210	B5	C606	F3	C962	A3	IC100	G5	L602	C1	R11	C1	R230	B6
C211	A5	C607	F3	C963	A3	IC101	E6	L603	C2	R12	C1	R231	B5
C212	B5	C608	F4	C964	B2	IC102	G5	L604	F1	R13	C1	R232	C6
C213	A5	C609	F4	C965	G2	IC103	F6	L605	B3	R14	C1	R233	A6
C214	C6	C610	B1	C966	G2	IC104	E5	L606	B3	R15	C1	R234	A6
C215	A7	C611	C1	C967	B2	IC105	E5	L700	F8	R16	C1	R235	B4
C216	A5	C612	F3			IC106	E7	L701	E8	R17	C1	R236	A5
C217	C5	C613	F2	CL200	C5	IC107	*F4	L950	G2	R18	C1	R237	C5
C218	*C4	C614	C1	CL201	C5	IC108	D5	L951	B2	R100	E6	R238	B5
C219	A7	C615	C1	CL202	C5	IC109	*E5			R101	E6	R239	C5
C220	B5	C616	F1	CL203	B5	IC110	E6	LV950	A2	R102	G5	R256	A6
C221	B5	C617	B3	CL204	B5	IC111	*F6			R103	G5	R257	B5
C223	B5	C618	B3	CL205	B4	IC112	D5	PH300	*A7	R104	E6	R258	B5
C224	C6	C619	B3	CL206	B4	IC113	D7	PH301	*B7	R105	E6	R259	B5
C226	C5	C620	B3	CL207	B4	IC114	*F7	PH302	*B6	R106	E6	R260	B5
C227	B6	C621	C3			IC115	E7	PH303	*B6	R107	E6	R261	B4
C230	D4	C622	C3	CN1	*G2	IC116	F7	PH304	*A6	R108	E6	R262	B4
C231	D4	C623	B4	CN101	*F1	IC200	B5	PH500	*C6	R109	*G5	R263	C4
C232	D4	C624	B3	CN102	A5	IC201	B7	PH501	*B7	R110	F5	R264	B4
C235	C7	C625	B3	CN201	B1	IC202	B6			R111	F5	R265	G1
C236	C6	C626	C3	CN202	A6	IC203	B7	Q1	G1	R112	F6	R266	A6
C300	D5	C627	B3	CN301	D2	IC204	C6	Q2	F1	R113	G1	R267	D4
C301	E5	C628	B3	CN302	D2	IC205	C5	Q300	B6	R114	G1	R268	D3
C302	E4	C630	*G6	CN303	D3	IC206	C7	Q301	A6	R115	E6	R269	E4
C303	E4	C631	G8	CN304	B8	IC207	B5	Q302	B6	R116	G1	R270	C3
C304	D4	C632	G6	CN305	A5	IC209	B5	Q303	A6	R117	G1	R271	C3
C305	E4	C633	E3	CN401	*G2	IC210	C6	Q304	B7	R118	F6	R272	C3
C306	E4	C634	C3	CN601	*A2	IC212	C5	Q400	G3	R119	*E6	R273	C3
C307	D4	C635	*G7	CN602	*A2	IC213	D4	Q401	G3	R120	E7	R274	C3
C308	E5	C636	G6	CN701	*E1	IC215	D4	Q402	G3	R121	E6	R275	D3
C309	C5	C637	G7	CN702	*A1	IC216	D4	Q403	G4	R122	E7	R276	C3
C400	B7	C638	*G7	CN703	*A5	IC300	*E5	Q404	G3	R123	*G5	R277	D3
C401	G6	C639	B3	CN704	*G5	IC301	D4	Q405	G3	R124	E6	R278	B5
C402	C7	C640	B4	CN705	*G7	IC302	E4	Q406	G3	R125	E5	R279	B5
C403	A5	C641	G8	CN706	*G8	IC303	D4	Q407	G3	R126	D5	R300	E5
C404	G5	C700	G7	CN801	*B1	IC304	F5	Q500	C7	R127	D5	R301	E3
C405	G3	C701	G7	CN901	F1	IC305	C5	Q501	B7	R130	E7	R302	E3
C406	G3	C702	G7			IC306	B7	Q600	F3	R131	F6	R303	D3
C407	*G5	C703	G7	D100	G5	IC400	*B7	Q601	E3	R132	F6	R304	D3
C408	*G5	C704	G7	D101	G5	IC401	C8	Q602	F3	R133	E7	R305	D3

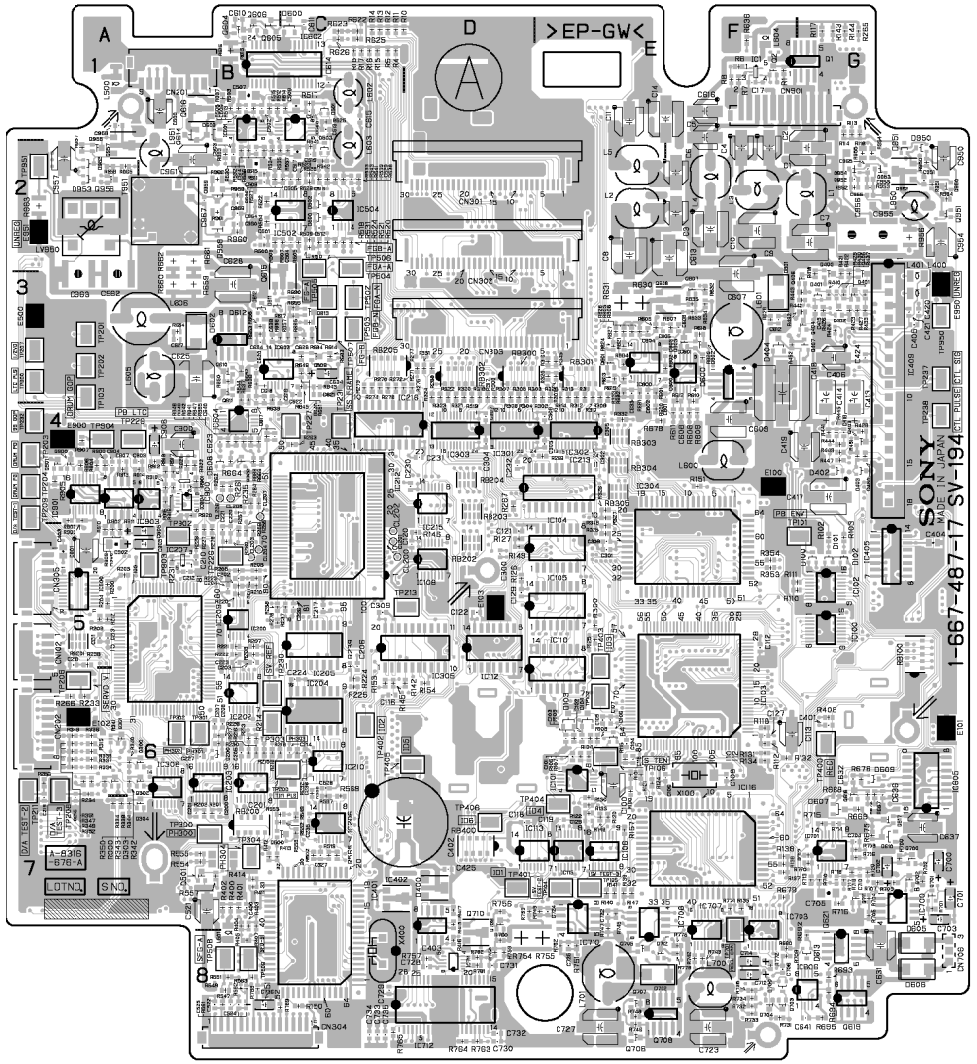

SV-194A -A SIDE-
SUFFIX: -17

DNW-A28
DNW-A23P

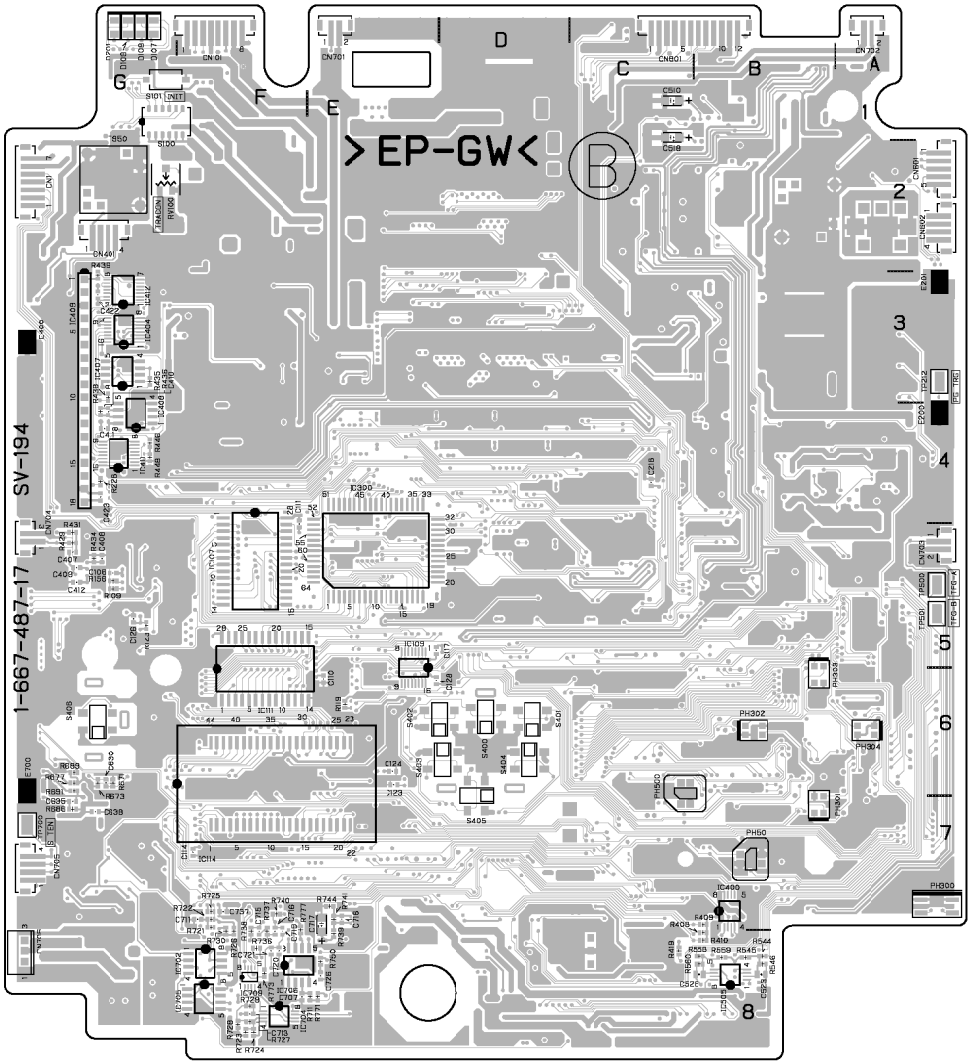

SV-194A -B SIDE-
SUFFIX: -17

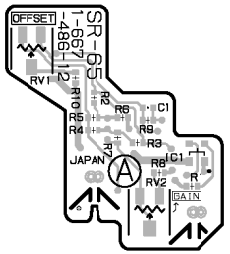

SR-65 -A SIDE-
SUFFIX: -12

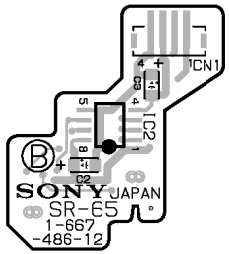

SR-65 -B SIDE-
SUFFIX: -12

R306	D3	R411	B7	R521	C2	R614	C3	R676	G6	R740	*F7	R951	G2	TP209	A4
R307	D3	R412	B7	R522	B2	R615	B1	R677	*G6	R741	*E7	R952	G2	TP211	A6
R308	D3	R413	B7	R523	C2	R616	B1	R678	E4	R742	F8	R953	G2	TP212	*A3
R309	E3	R414	B7	R524	C2	R617	C3	R679	F7	R743	F8	R954	G2	TP213	D5
R310	E3	R415	D7	R525	C1	R618	F3	R680	F8	R744	*E7	R955	G2	TP226	B5
R311	E3	R416	D8	R526	B2	R619	E3	R681	E3	R745	E7	R956	G2	TP227	C4
R312	E3	R417	D7	R527	C2	R620	F3	R682	E3	R746	E8	R957	A2	TP229	A4
R313	E3	R418	G3	R528	C2	R621	E3	R683	C3	R747	E7	R958	A2	TP230	B6
R314	E3	R419	*C8	R529	C2	R622	C1	R684	C3	R748	E8	R959	B2	TP231	C4
R315	A6	R421	G3	R530	B2	R623	C1	R685	C3	R749	E7	R950	B2	TP232	A4
R316	E3	R422	G3	R531	C2	R624	E3	R686	*G7	R750	*E8	R951	B2	TP237	G3
R317	D3	R423	G3	R532	B2	R625	C1	R687	G6	R751	E8	R952	B2	TP238	G4
R318	D3	R424	G3	R533	C2	R626	C1	R688	B4	R752	E8	R953	A2	TP300	B7
R319	D3	R425	G3	R534	B2	R627	E3	R689	*G6	R753	D7	R954	G2	TP301	B6
R320	D3	R426	G3	R535	B2	R628	E3	R690	C3	R754	D8	R955	A2	TP302	B6
R321	D3	R427	G3	R536	B2	R629	F3	R691	*G6	R755	E8			TP303	B6
R322	D3	R428	G4	R537	C2	R630	E3	R692	G8	R756	D7	RB100	G5	TP304	B7
R323	D3	R429	*G5	R538	C2	R631	E3	R693	G8	R757	D8	RB200	B7	TP400	G6
R324	D3	R430	G3	R539	C2	R632	F3	R694	G8	R758	D8	RB201	A5	TP401	D7
R325	E5	R431	*G5	R540	C2	R633	F3	R695	G8	R759	D8	RB202	D5	TP402	C6
R326	E4	R432	G3	R541	C2	R634	F3	R700	G7	R760	D8	RB203	D4	TP403	E5
R327	E4	R433	G3	R542	C2	R635	F3	R701	G7	R761	D8	RB204	D4	TP404	E7
R328	E3	R434	*G5	R543	C2	R636	F1	R702	G7	R762	D8	RB205	C3	TP405	D6
R329	E3	R435	*G3	R544	*B8	R637	B3	R703	G7	R763	D8	RB300	D3	TP406	D7
R330	A6	R436	*G4	R545	*B8	R638	B3	R704	G7	R764	D8	RB301	E3	TP500	*A5
R331	D3	R437	G3	R546	*B8	R639	B3	R705	G7	R765	C8	RB302	D3	TP501	*A5
R332	E4	R438	*G3	R547	B8	R640	C3	R706	G7	R768	B8	RB303	E4	TP502	C3
R333	E3	R439	*G3	R548	B8	R641	B4	R707	G7	R769	B8	RB304	E4	TP503	C3
R334	A7	R440	G3	R549	C7	R642	B4	R708	G7	R770	G7	RB305	E4	TP504	C2
R335	A6	R441	G4	R551	B8	R643	C3	R709	F8	R771	*E8	RB400	D7	TP505	C3
R336	A6	R442	G3	R552	B7	R644	B3	R710	G7	R772	F8			TP506	C2
R337	A6	R443	G3	R553	B7	R645	C3	R711	*E8	R773	*F8	RV100	*G2	TP507	C3
R338	A6	R444	G4	R554	B7	R646	B4	R712	G7	R774	F7			TP508	B8
R339	A7	R445	G4	R555	B7	R647	B4	R713	G7	R775	F8	S100	*G1	TP509	B8
R340	A6	R446	*G4	R556	C7	R648	B4	R714	G7	R776	F8	S101	*G1	TP700	*G7
R341	A6	R447	G4	R557	B7	R649	C3	R715	G7	R777	*F7	S400	*D6	TP701	F7
R342	A6	R448	*G4	R558	*B8	R650	B3	R716	G7	R900	A4	S401	*D6	TP900	A3
R343	A6	R449	G4	R559	*B8	R651	C3	R717	G7	R901	B4	S402	*D6	TP902	B5
R344	A7	R450	G4	R560	*B8	R652	B3	R718	G7	R902	A4	S403	*D6	TP903	B5
R345	E3	R451	G4	R561	B8	R653	B3	R719	G7	R903	A4	S404	*D6	TP904	A4
R346	E5	R452	F3	R562	B8	R654	B3	R720	G7	R904	A4	S405	*D6	TP950	G3
R347	A6	R500	B2	R563	B8	R655	C3	R721	*F7	R905	A4	S406	*G6	TP951	A2
R348	A6	R502	C7	R565	C7	R656	B3	R722	*F7	R906	A4				
R349	A6	R503	B1	R566	C6	R657	C3	R723	*F8	R907	A4	T950	*G2	X100	F6
R350	A6	R504	B2	R567	C7	R658	B3	R724	*F8	R908	A5	T951	B2	X400	C8
R351	A6	R505	C2	R568	C7	R659	B3	R725	*F7	R909	A5				
R352	A6	R506	B2	R600	E4	R660	B3	R726	*F8	R910	A5	TP101	G5	*:B SIDE	
R353	F5	R507	C2	R601	E3	R661	B2	R727	*F8	R911	A5	TP102	E6		
R354	F5	R508	B1	R602	E3	R662	B2	R728	*F8	R912	B4	TP103	A3		
R400	B7	R509	C2	R603	E3	R663	B2	R729	*F8	R913	A4	TP104	E7		
R401	B7	R510	C2	R604	E3	R664	B4	R730	*F8	R914	B4	TP105	E7		
R402	B7	R511	B2	R605	E3	R665	B4	R731	F8	R915	B4	TP106	E6		
R403	B7	R512	B1	R606	E3	R666	B4	R732	F8	R916	B4	TP200	C6		
R404	B7	R513	B1	R607	F3	R667	B1	R733	F8	R917	B4	TP201	A3		
R405	B8	R514	C1	R608	F4	R668	G7	R734	F8	R918	B4	TP202	A3		
R406	G6	R515	B1	R609	F4	R669	G7	R735	F8	R919	B4	TP203	A4		
R407	B7	R517	C1	R610	F3	R671	*G6	R736	*F8	R920	B4	TP204	A4		
R408	*B8	R518	C2	R611	F4	R672	G6	R737	*F8	R921	B4	TP206	A6		
R409	*B7	R519	C7	R612	F3	R673	*G6	R738	*F8	R922	B4	TP207	A3		
R410	*B8	R520	C2	R613	E3	R675	G7	R739	*E8	R950	G2	TP208	A6		

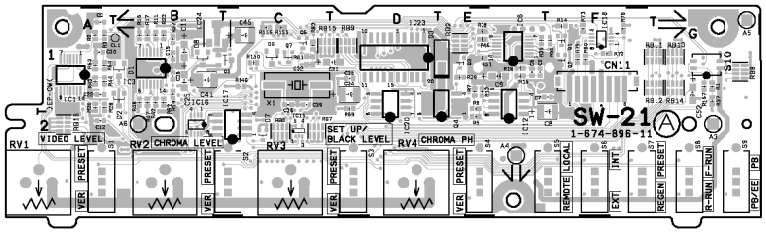

SW-21 -A SIDE-

SUFFIX: -11

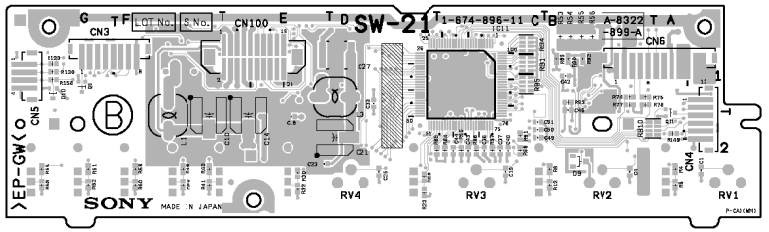

SW-21 -B SIDE-

SUFFIX: -11

SW-21(1-674-896-11)

C1	*A2	C30	A1	CN3	*G1	IC16	B2	R3	A1	R29	E1	R58	*F2	R85	*C2	RB4	*C1	S4	E2
C2	A1	C31	D1	CN4	*A2	IC17	C2	R4	*A2	R30	*E2	R59	B1	R86	*C2	RB5	*C1	S5	F2
C4	*B2	C32	D1	CN5	*G1	IC18	F1	R5	E2	R32	*E2	R60	*F2	R87	*C2	RB6	C2	S6	F2
C5	B1	C33	*D1	CN6	*A1	IC20	D1	R6	E1	R37	G1	R61	*G2	R88	*C2	RB7	C2	S7	F2
C6	B1	C34	D1	CN11	F1	IC23	D1	R7	E1	R38	E1	R62	*G2	R89	*B1	RB8	G1	S8	G2
C7	F1	C35	D1	CN100	*E1	IC24	B1	R8	*A2	R39	E1	R63	A1	R90	*B1	RB9	D1	S9	G2
C8	F2	C36	*D2					R9	*B2	R40	*F2	R64	A1	R91	*C2	RB10	*B2	S10	G1
C9	B1	C37	*D2	D1	B1	L1	*F2	R11	B1	R41	*F2	R65	*G2	R92	*B1	RB11	G1		
C10	*F2	C38	D1	D2	B1	L3	*D1	R12	*B2	R42	B1	R66	*G2	R93	*B1	RB12	G1	X1	C1
C11	B1	C39	D1	D3	E1			R13	E1	R43	A1	R69	D1	R96	*C2	RB13	G1		
C12	A2	C40	*D2	D6	C1	Q1	F1	R14	F1	R44	A1	R72	F1	R123	*G1	RB14	G1	*:B SIDE	
C14	*B2	C41	B1	D7	C2	Q2	F1	R15	E1	R45	E1	R73	F1	R130	*G1	RB15	C1		
C15	B1	C42	*B1	D8	B1	Q3	E1	R16	E1	R46	*F2	R74	*B1	R146	C1	RB16	A2		
C18	*B2	C43	*D2	D9	*B2	Q4	E1	R17	B1	R47	B1	R75	*B1	R149	*A2				
C19	*C2	C44	*D2	D10	*G1	Q5	C1	R18	B1	R48	B1	R76	F1	R150	C1	RV1	A2		
C21	*D2	C45	D1			Q6	C1	R20	*D2	R50	*F2	R77	*B1	R155	C1	RV2	B2		
C22	A1	C46	*B1	IC1	A1	Q7	C1	R22	B1	R51	E1	R78	*B1	R156	C1	RV3	C2		
C23	*B2	C49	*D2	IC3	B1	Q9	*G1	R23	*D2	R52	B1	R79	F1	R157	G1	RV4	D2		
C25	B1	C50	*D2	IC6	E1	Q11	*A2	R25	F1	R53	*B1	R80	F1	R158	*G1				
C26	*D2	C51	*D2	IC11	*C1			R26	A1	R54	*B1	R81	C1			S1	A2		
C27	*D1	C52	B1	IC12	E1	R1	G1	R27	B1	R55	*B1	R82	C1	RB1	*C1	S2	C2		
C28	B1			IC15	C2	R2	A1	R28	A1	R56	*B1	R84	*C2	RB2	E1	S3	D2		

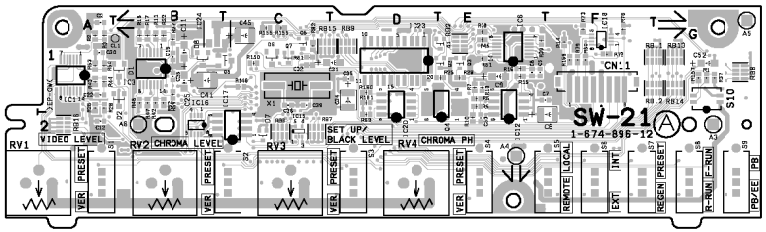

SW-21 -A SIDE-

SUFFIX: -12

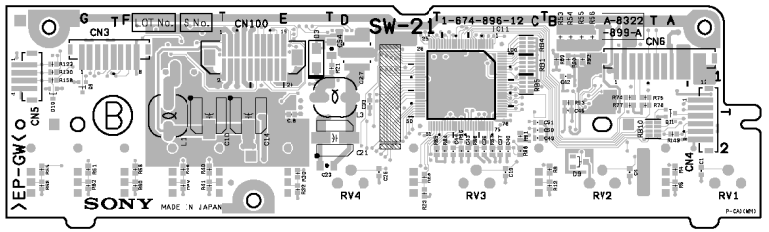

SW-21 -B SIDE-

SUFFIX: -12

SW-21(1-674-896-12)

C1	*A2	C30	A1	C54	*D1	IC6	E1	Q11	*A2	R22	B1	R51	E1	R78	*B1	R156	C1	RV1	A2
C2	A1	C31	D1			IC11	*C1			R23	*D2	R52	B1	R79	F1	R157	G1	RV2	B2
C4	*B2	C32	D1	CL1	B1	IC12	E1	R1	G1	R25	E1	R53	*B1	R80	F1	R158	*G1	RV3	C2
C5	B1	C33	*D1			IC15	C2	R2	A1	R26	A1	R54	*B1	R81	C1	R159	F1	RV4	D2
C6	B1	C34	D1	CN3	*G1	IC16	B2	R3	A1	R27	B1	R55	*B1	R82	C1	R160	D1		
C7	B1	C35	D1	CN4	*A2	IC17	C2	R4	*A2	R28	A1	R56	*B1	R84	*C2	R161	D1	S1	A2
C8	F2	C36	*D2	CN5	*G1	IC18	F1	R5	E1	R29	E1	R58	*F2	R85	*C2			S2	C2
C9	B1	C37	*D2	CN6	*A1	IC20	D1	R6	E1	R30	*E2	R59	B1	R86	*C2	RB1	*C1	S3	D2
C10	*F2	C38	D1	CN11	F1	IC23	D1	R7	E1	R32	*E2	R60	*F2	R87	*C2	RB2	E1	S4	E2
C11	B1	C39	D1	CN100	*E1	IC24	B1	R8	*A2	R37	G1	R61	*G2	R88	*C2	RB4	*C1	S5	F2
C12	A2	C40	*D2					R9	*B2	R38	E1	R62	*G2	R89	*B1	RB5	*C1	S6	F2
C14	*B2	C41	B1	D1	B1	L1	*F2	R10	E2	R39	E1	R63	A1	R90	*B1	RB6	C2	S7	F2
C15	B1	C42	*B1	D2	B1	L3	*D1	R11	B1	R40	*F2	R64	A1	R91	*C2	RB7	C2	S8	G2
C18	*B2	C43	*D2	D3	*E1			R12	*B2	R41	*F2	R65	*G2	R92	*B1	RB8	G1	S9	G2
C19	*C2	C44	*D2	D6	C1	Q1	E1	R13	E1	R42	B1	R68	*G2	R93	*B1	RB9	D1	S10	G1
C21	*D2	C45	D1	D7	C2	Q2	E1	R14	F1	R43	A1	R69	D2	R96	*C2	RB10	*B2		
C22	A1	C46	*B1	D8	B1	Q3	E1	R15	E1	R44	A1	R72	F1	R123	*G1	RB11	G1	X1	C1
C23	*B2	C49	*D2	D9	*B2	Q4	E1	R16	E1	R45	E1	R73	F1	R130	*G1	RB12	G1		
C25	B1	C50	*D2	D10	*G1	Q5	C1	R17	B1	R46	*F2	R74	*B1	R146	C1	RB13	G1	*:B SIDE	
C26	*D2	C51	*D2			Q6	C1	R18	B1	R47	B1	R75	*B1	R149	*A2	RB14	G1		
C27	*D1	C52	G1	IC1	A1	Q7	C1	R20	*D2	R48	B1	R76	F1	R150	C1	RB15	C1		
C28	B1	C53	B2	IC3	B1	Q9	*G1	R21	*D1	R50	*F2	R77	*B1	R155	C1	RB16	A2		

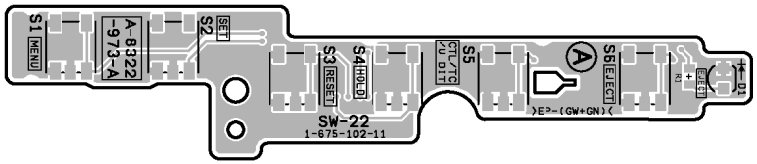

SW-22 -A SIDE-
SUFFIX: -11

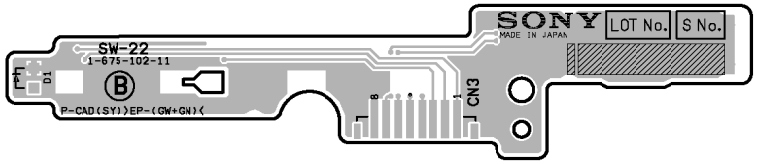

SW-22 -B SIDE-
SUFFIX: -11

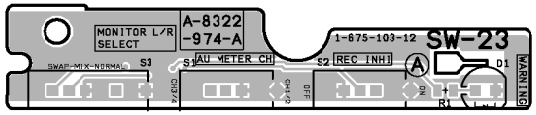

SW-23 -A SIDE-
SUFFIX: -12

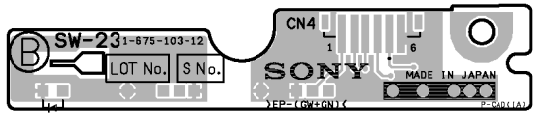

SW-23 -B SIDE-
SUFFIX: -12

SY-259B(1-667-489-14)

C1	A1	C330	C1	IC200	F2
C2	A3	C400	*D3	IC201	F2
C3	A3	C401	*C3	IC202	E2
C4	A2	C402	*C3	IC203	F3
C5	A1	C403	*D3	IC204	F3
C101	A3	C404	*C4	IC205	F2
C102	*A4	C405	*C4	IC206	E3
C103	A3	C406	*D4	IC207	F3
C104	A3	C407	A4	IC208	E2
C105	A3	C408	A4	IC209	*C4
C106	A4	C409	*A4	IC210	C2
C108	*B4	C410	A4	IC211	C2
C109	*B4	C411	A4	IC212	C2
C110	*B3	C412	*A4	IC213	C1
C111	*B3	C413	B4	IC214	C2
C112	*B3	C414	B4	IC300	*F4
C113	*B3	C415	*B4	IC301	*F3
C114	*B3	C416	B4	IC302	*F3
C115	*B3	C417	C4	IC303	B4
C116	*B3	C418	*C4	IC304	*F4
C117	*A3	C419	*D4	IC305	*E4
C118	*B2	C420	*F4	IC306	*E3
C119	*B2	C421	*E4	IC307	*E4
C120	*B2	C422	*C3	IC308	E3
C121	*B3	C500	*F1	IC309	F4
C122	*B3	C501	*F1	IC330	*C1
C123	*B3	C502	*F1	IC400	C3
C124	*B3	C503	*E1	IC401	*C3
C125	F1	C504	*E1	IC402	C4
C126	*C2	C505	*E1	IC403	C4
C127	*C2	C506	E1	IC404	D4
C128	*D2			IC500	*F1
C129	*B2	CL110	C2	IC501	*F1
C130	*B2	CL303	B4	IC502	*F1
C131	*C2	CL400	C4	IC503	*E1
C132	*C1	CL401	C4	IC504	*E1
C133	*B2				
C134	A2	CN1	E1	L400	A4
C135	A2	CN2	C1	L401	B4
C136	B2	CN3	D1		
C137	A2	CN4	*B1	Q200	A1
C138	*B2	CN11	C4	Q201	A1
C141	A2	CN12	E4	Q202	A1
C144	F1			Q203	A1
C145	B3	D100	A3		
C146	A3	D200	*B1	R11	*B1
C200	*F2	D201	A1	R12	D4
C201	*F3	D202	A1	R13	E4
C202	*F3	D203	A1	R14	E4
C203	*E2	D204	A1	R100	A3
C204	*F3	D205	*B1	R101	A3
C205	*F3			R102	A3
C206	*F3	E100	A1	R103	A3
C207	*F3	E101	E1	R104	A3
C208	*E3	E200	D4	R105	A3
C209	*B1	E201	F4	R106	A3
C210	*B1	E300	*B2	R107	A3
C211	*B2	E301	*D1	R108	A3
C212	*E2	E400	*C4	R109	A3
C213	*C2	E401	*F4	R110	A3
C214	*C1			R111	A3
C215	*C1	IC1	A1	R112	A3
C216	*C1	IC2	*A3	R113	A3
C217	*C1	IC3	*A2	R114	A3
C218	*C1	IC4	*A2	R115	*B3
C219	*F3	IC5	*A1	R116	*B2
C220	*C2	IC100	A3	R117	*B2
C221	*F2	IC101	A3	R118	*B2
C222	*F2	IC102	B3	R119	*B2
C223	*C2	IC103	A4	R120	*C3
C224	*F3	IC104	A3	R121	*B3
C225	*F3	IC105	*A4	R122	*B3
C226	*C2	IC106	B3	R123	*C2
C300	*F4	IC107	B3	R124	*F4
C301	*F4	IC108	B3	R125	*F4
C302	*F3	IC109	B3	R126	A2
C303	*F4	IC110	B4	R127	*C1
C304	*E4	IC111	B4	R130	B2
C305	F3	IC112	F1	R132	A2
C306	*F4	IC113	C2	R133	A2
C307	*F4	IC114	D2	R135	A1
C308	*E3	IC115	C2	R136	A1
C309	*E3	IC116	E2	R137	A1
C310	*E4	IC117	B2	R138	*B3
C311	*F4	IC118	A2	R139	*B3
C312	*F4	IC119	B2	R140	*E4
C313	*E3	IC120	A2	R142	A3
C314	*E4	IC121	A2	R144	A3
C315	F3	IC122	A2	R200	*B2
C316	*F4	IC123	A2	R201	*B2
C317	F3	IC126	*E4	R202	*F3
C318	*F3	IC127	*F4	R203	*F3

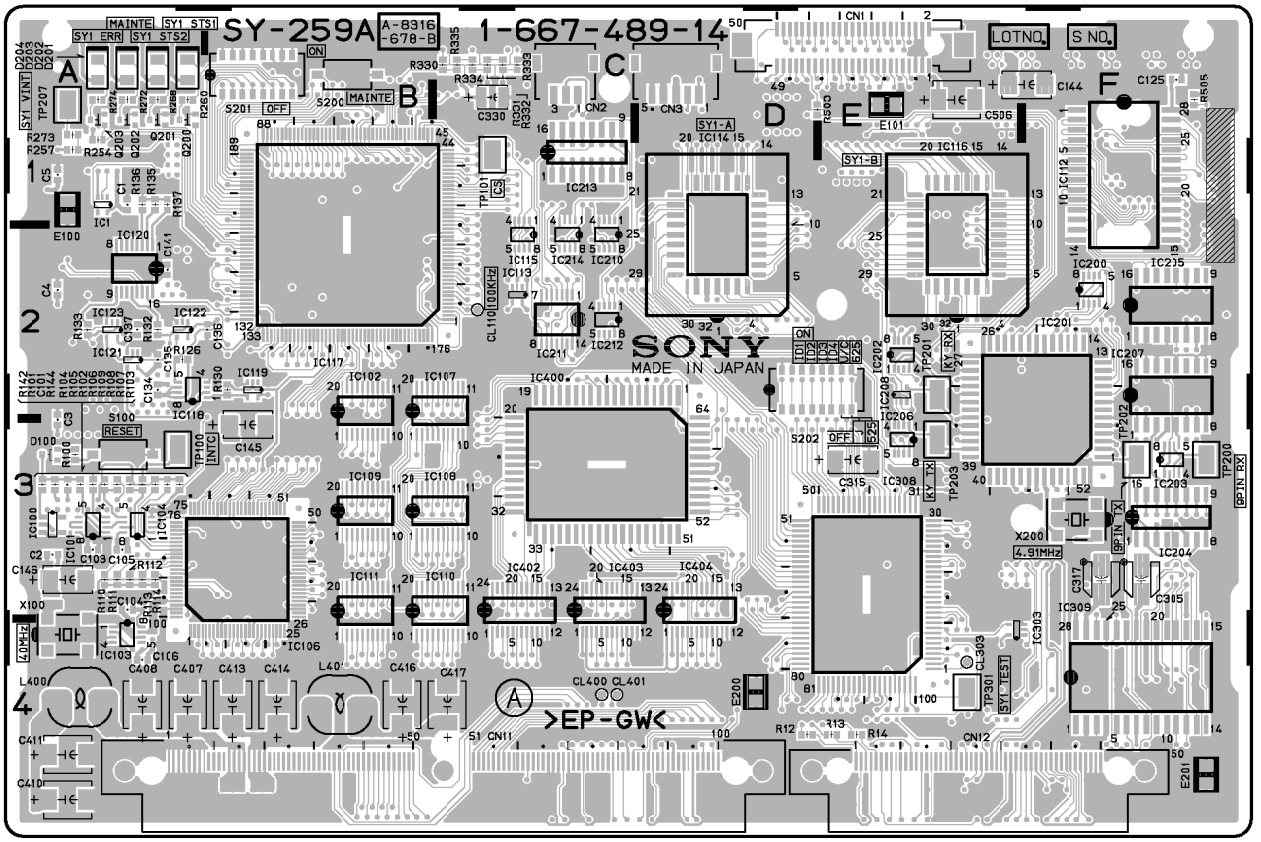

SY-259B -A SIDE-
SUFFIX: -14

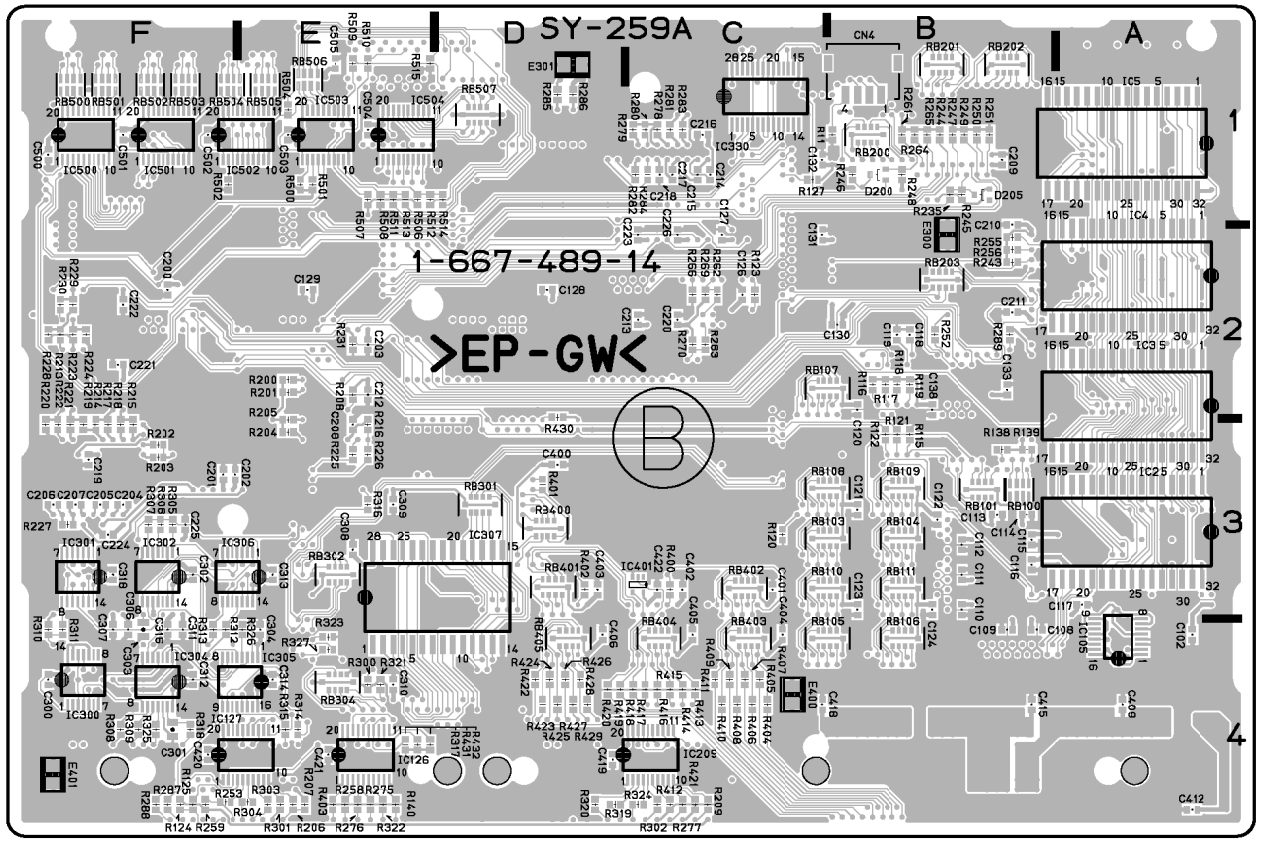

SY-259B -B SIDE-
SUFFIX: -14

R204	*E3	R321	*E4	RB505	*E1
R205	*E3	R322	*E4	RB506	*E1
R206	*E4	R323	*E4	RB507	*D1
R207	*E4	R324	*C4		
R208	*B2	R325	*F4	S100	A3
R209	*C4	R326	*E4	S200	B1
R213	*F2	R327	*E4	S201	B1
R214	*F3	R330	C1	S202	D2
R215	*F3	R331	C1		
R216	*E3	R332	C1	TP100	A3
R217	*F3	R333	C1	TP101	C1
R218	*F3	R334	C1	TP200	F3
R219	*F3	R335	C1	TP201	E2
R220	*F3	R400	*C3	TP202	F3
R221	*F3	R401	*D3	TP203	E3
R222	*F3	R402	*D3	TP207	A1
R223	*F2	R403	*E4	TP301	E4
R224	*F2	R404	*C4		
R225	*E3	R405	*C4	X100	A4
R226	*E3	R406	*C4	X200	F3
R227	*F3	R407	*C4		
R228	*F2	R408	*C4	*:B SIDE	
R229	*F2	R409	*C4		
R230	*F2	R410	*C4		
R231	*E2	R411	*C4		
R235	*B1	R412	*C4		
R243	*B2	R413	*C4		
R244	*B1	R414	*C4		
R245	*B1	R415	*C4		
R246	*B1	R416	*C4		
R247	*B1	R417	*C4		
R248	*B1	R418	*C4		
R249	*B1	R419	*D4		
R250	*B1	R420	*D4		
R251	*B1	R421	*C4		
R252	*B2	R422	*D4		
R253	*F4	R423	*D4		
R254	A1	R424	*D4		
R255	*B2	R425	*D4		
R256	*B2	R426	*D4		
R257	A1	R427	*D4		
R258	*E4	R428	*D4		
R259	*F4	R429	*D4		
R260	A1	R430	*D2		
R261	*B1	R431	*E4		
R262	*C2	R432	*E4		
R263	*C2	R500	*E1		
R264	*B1	R501	*E1		
R265	*B1	R502	*F1		
R266	*C2	R503	D1		
R268	A1	R504	*E1		
R269	*C2	R505	F1		
R270	*C2	R506	*E1		
R272	A1	R507	*E1		
R273	A1	R508	*E1		
R274	A1	R509	*E1		
R275	*E4	R510	*E1		
R276	*E4	R511	*E1		
R277	*C4	R512	*E1		
R278	*C1	R513	*E1		
R279	*C1	R514	*D1		
R280	*C1	R515	*E1		
R281	*C1				
R282	*C1	RB100	*B3		
R283	*C1	RB101	*B3		
R284	*C1	RB103	*B3		
R285	*D1	RB104	*B3		
R286	*D1	RB105	*B4		
R287	*F4	RB106	*B4		
R288	*F4	RB107	*B2		
R289	*B2	RB108	*B3		
R300	*E4	RB109	*B3		
R301	*E4	RB110	*B3		
R302	*C4	RB111	*B3		
R303	*E4	RB200	*B1		
R304	*E4	RB201	*B1		
R305	*F3	RB202	*B1		
R306	*F3	RB203	*B2		
R307	*F3	RB301	*D3		
R308	*F4	RB302	*E3		
R309	*F4	RB304	*E4		
R310	*F4	RB400	*D3		
R311	*F4	RB401	*D3		
R312	*F4	RB402	*C3		
R313	*F4	RB403	*C4		
R314	*E4	RB404	*C4		
R315	*E4	RB405	*D4		
R316	*E3	RB500	*P1		
R317	*E4	RB501	*P1		
R318	*F4	RB502	*P1		
R319	*D4	RB503	*P1		
R320	*D4	RB504	*P1		

SY-260(1-667-490-12)

C1	A1	C455	*D4	IC303	F2	R225	*B1	R463	*E4
C2	A3	C456	*C4	IC304	*F4	R226	*B1	R464	*B4
C3	A3	C457	*D4	IC305	E3	R228	*B1	R465	*D4
C4	A2	C458	*D4	IC307	*F4	R229	*B1	R466	*D4
C5	A1	C459	*E4	IC401	*F3	R230	*B1	R467	*D4
C101	*B3	C501	A4	IC402	F3	R231	*E1	R468	*D4
C102	*B3	C502	A4	IC451	D4	R232	A1	R469	*D4
C103	*C2	C503	*A4	IC452	C4	R233	*D1	R470	*D4
C104	*C2	C504	A4	IC453	D4	R234	A1	R471	*D4
C105	*C2	C505	A4	IC454	D4	R235	A1	R472	*D4
C106	*B3	C506	*A4	IC455	E4	R236	*E1	R473	*C4
C107	*B2	C507	B4	IC456	*D4	R239	*E1	R474	*C4
C108	*C2	C508	B4	IC457	*F2	R240	*F1	R475	*C4
C109	B3	C509	*B4	IC458	*F4	R241	*C1	R476	*C4
C111	*B3	C510	C4	IC459	*D4	R242	*E1	R477	*C4
C112	*C3	C511	C4	IC460	*F4	R243	*D2	R478	*C4
C113	*C3	C512	*C4	IC461	*F4	R244	*D2	R479	*C4
C114	*C3					R245	*C2	R480	*C4
C115	*C3	CL202	E1	Q201	*D1	R246	*D2	R481	*C4
C116	*C2	CL203	E1	Q202	*E1	R247	*D2	R482	*C4
C117	*B2	CL204	E1	Q203	*E1	R248	*C2	R483	*D4
C118	*B3	CL205	C2	Q204	*E1	R249	*C2	R484	*D4
C119	*B3	CL206	C2			R250	*C1	R485	*D4
C120	*B3	CL207	C2	R101	*D2	R251	*C1	R486	*D4
C121	C2	CL208	C2	R102	*C2	R252	*F4	R487	*D4
C122	C2	CL210	B2	R103	B4	R253	*B1	R488	*D4
C123	*D3	CL211	E1	R104	B3	R254	*C4	R489	*D4
C124	C2	CL212	C2	R105	*C2	R255	*C4	R490	*D4
C125	C3	CL213	E1	R106	*C2	R256	*E4	R491	*C4
C126	C4	CL401	F3	R107	B4	R257	*F4	R492	*D4
C127	C4	CL452	C4	R108	B3	R258	*F4	R493	*D4
C128	*E2			R109	B3	R259	*F4	R494	*D4
C129	*C2	CN21	C4	R110	*B3	R260	*C4	R495	*D4
C130	*C1	CN22	E4	R111	*B3	R261	*C4	R496	*E4
C131	*C1	CN202	D1	R112	*C3	R262	*F4	R497	*E4
C132	*B2	CN203	C1	R113	*B3	R263	*C4	R498	*E4
C133	*B2			R114	*C3	R264	*C4	R499	*E4
C134	*D3	D101	*D2	R115	B2	R301	*F2	R500	*C4
C135	*E3	D201	D1	R116	B2	R302	*F2		
C136	*E3	D202	E1	R117	B2	R303	F3	RB101	B3
C138	*D3	D203	E1	R118	B2	R304	F3	RB102	*B2
C140	*E3	D204	E1	R119	C2	R305	*F2	RB103	*C2
C141	*E3			R120	C3	R305	F1	RB104	*B2
C142	E3	E101	D2	R121	*B2	R307	F1	RB105	*C3
C145	*B2	E102	*D1	R122	*B2	R308	F1	RB106	*C3
C146	*C3	E201	E2	R123	*C2	R309	*F2	RB107	*C3
C201	*D1	E202	A3	R124	*C2	R310	*F4	RB108	*B3
C202	*D2	E301	A1	R125	*B2	R311	*D4	RB109	*D3
C203	*E2	E302	*F1	R126	*D3	R312	*F4	RB110	*C3
C204	*E2			R127	*D3	R313	*E4	RB111	*C3
C205	*E1	FL501	A4	R128	*B3	R401	*F4	RB112	*C4
C206	*E1	FL502	B4	R129	*B2	R402	*E3	RB113	*B4
C207	*F1			R130	*D3	R403	F3	RB201	A1
C208	*B1	IC1	A1	R131	*D3	R404	*F3	RB202	A1
C209	*B1	IC2	*A3	R132	*D3	R405	*F3	RB301	*F2
C210	*B1	IC3	*A2	R133	*E3	R406	*F3	RB302	F1
C211	*B1	IC4	*A2	R134	*E3	R407	*F4	RB303	*F2
C212	*B2	IC5	*A1	R135	*E3	R408	*F3	RB401	*F4
C213	*C1	IC101	C2	R136	*E3	R409	*F2	RB402	*F4
C214	*C1	IC102	B3	R137	*D3	R410	*D4	RB403	*F3
C215	*C1	IC103	C2	R138	*D3	R412	*D4	RB410	*E4
C216	*C2	IC104	B3	R139	*B4	R413	*D4	RB411	*E4
C217	*B2	IC105	B2	R140	*C4	R414	*E4	RB412	*E4
C218	*D2	IC106	C2	R141	*E4	R415	*E4	RB450	D4
C219	*E1	IC107	*B4	R142	*C4	R415	*E4	RB451	C4
C220	*D2	IC108	C3	R143	*B4	R417	*E2	RB452	D4
C221	*C1	IC109	D3	R144	*E3	R413	*E4	RB453	D4
C222	*C1	IC110	D3	R145	*E4	R419	*E4	RB454	E4
C223	*C1	IC111	C3	R146	*C4	R420	*D4		
C224	*D2	IC112	C3	R201	*E4	R421	*F4	S101	D2
C226	*E1	IC113	C3	R202	*E2	R422	*F4	S201	D1
C301	*F2	IC114	B3	R203	*E2	R423	*E4		
C302	*F3	IC115	E2	R204	*E2	R424	*F4	TP203	F1
C303	*F1	IC116	B1	R205	*E2	R425	*D4	TP204	E1
C304	*E2	IC117	B2	R206	*D2	R426	*E4	TP209	E1
C305	*F4	IC118	B2	R207	*D1	R427	*F3	TP210	E1
C310	*F4	IC119	E3	R208	*E1	R428	*F3	TP211	F1
C311	*F2	IC120	D3	R209	*E1	R429	*F3		
C312	*F2	IC121	E3	R210	*F1	R430	*F3	X101	B3
C401	*F3	IC122	E3	R211	*D4	R431	*F4	X201	D1
C402	*F4	IC123	E4	R212	*B2	R450	*D4	X202	C1
C403	*F3	IC126	*E3	R213	*C1	R451	*E4		
C410	*F4	IC202	*E1	R214	*B2	R452	*C4	*:B SIDE	
C411	*F4	IC203	E1	R215	*C2	R453	*C4		
C412	*D4	IC204	F1	R216	*C1	R454	*D4		
C413	*D4	IC206	*B1	R217	*B1	R453	*D4		
C414	*F3	IC207	B2	R218	*B1	R456	*D4		
C415	*F4	IC208	*B1	R219	*B1	R457	*E4		
C450	*D4	IC210	D2	R220	*B1	R458	*E4		
C451	*C4	IC211	D2	R221	*B1	R459	*E4		
C452	*D4	IC212	C1	R222	*B1	R460	*E4		
C453	*D4	IC214	C2	R223	*F4	R461	*E4		
C454	*E4	IC301	*F2	R224	*B1	R462	*E4		

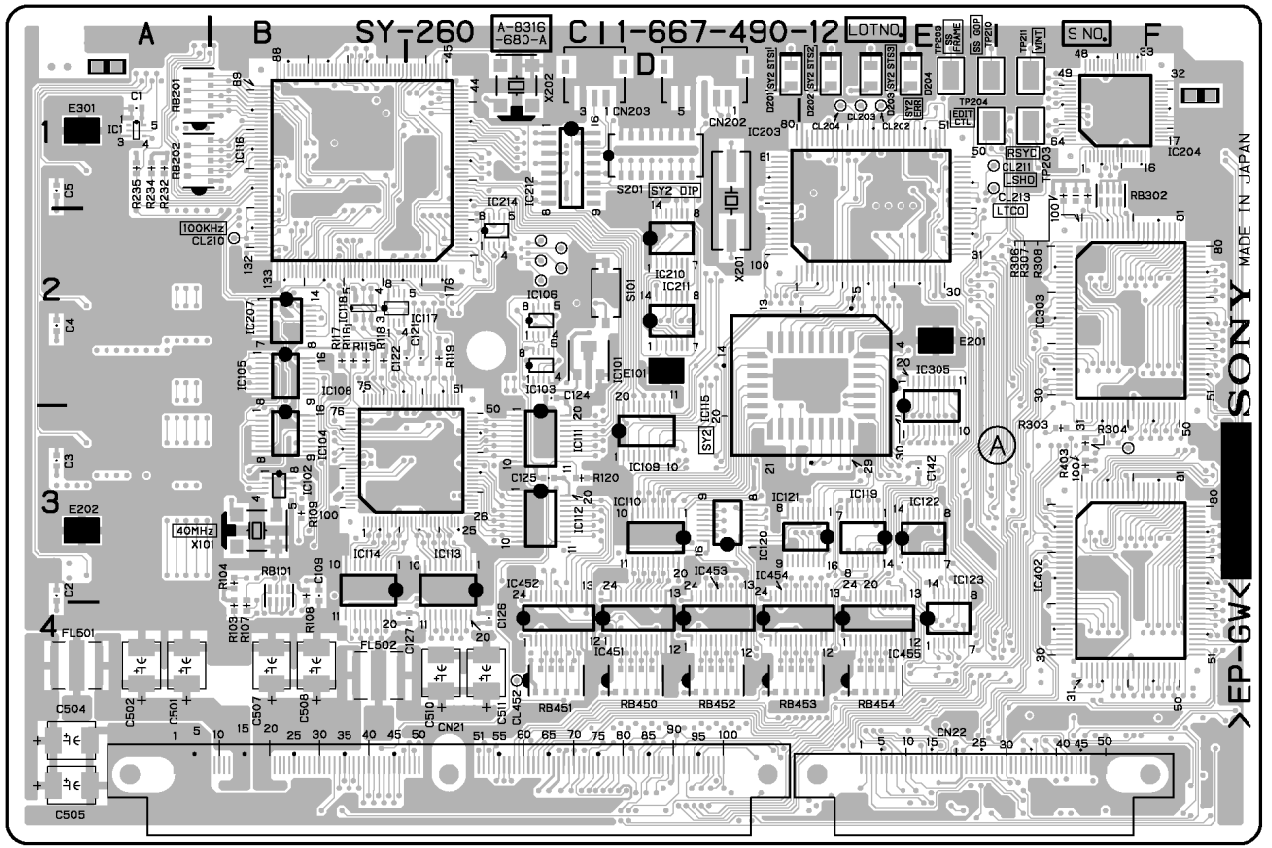

SY-260 -A SIDE-
SUFFIX: -12

http://getMANUAL.com

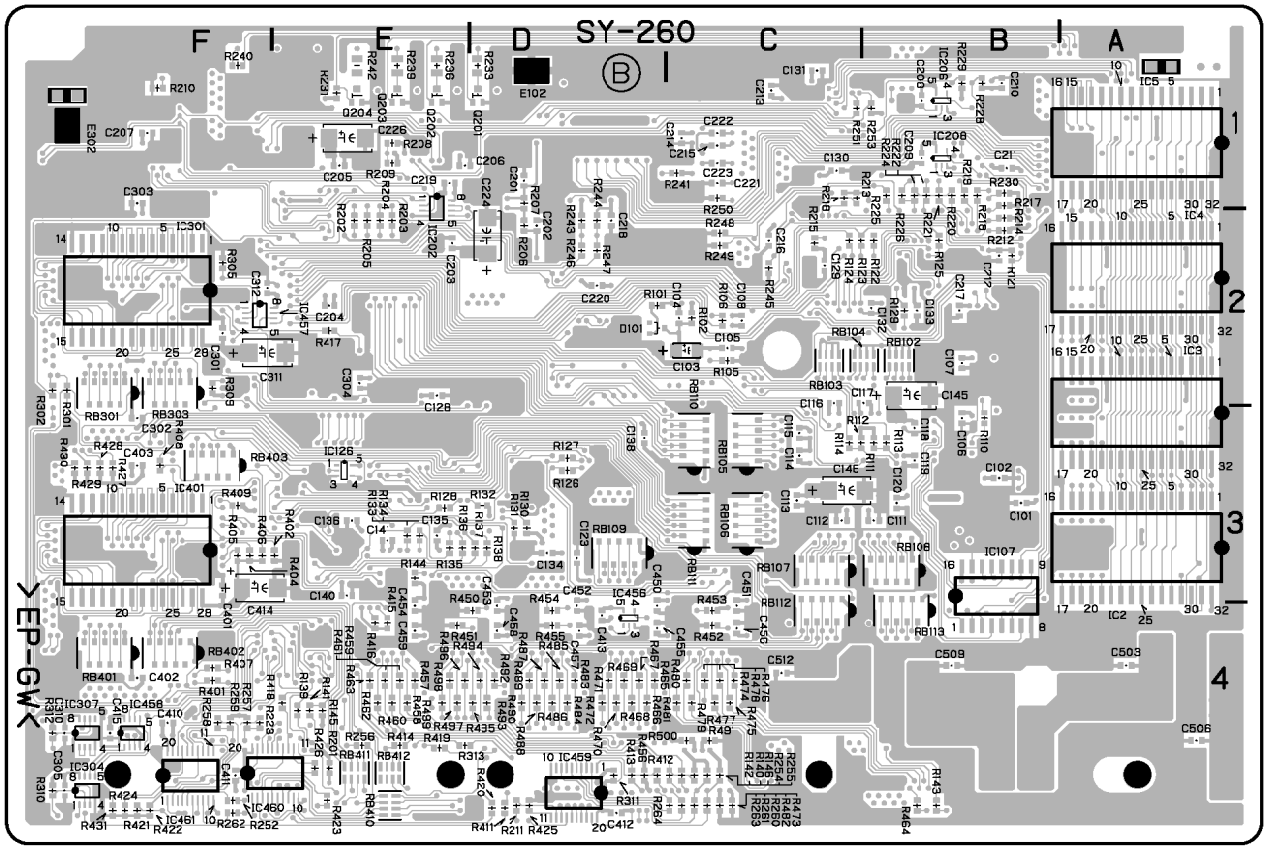

SY-260 -B SIDE-
SUFFIX: -12

TG-191(1-667-491-17)

C100	F4	C194	*B1	C285	*F2	CP202	E2	IC228	F2
C101	*F4	C195	*B1	C287	*E3	CP203	*E2	IC229	*E4
C103	*A1	C196	*A2	C288	*F4			IC230	*E2
C104	*A2	C197	A2	C289	*D4	D102	*B3	IC231	*E2
C105	*B2	C198	B1	C290	*C1	D103	*C3	IC232	E3
C106	*B2	C199	*B1	C291	*C1	D201	*E3	IC233	E4
C107	*A1	C200	D4	C292	B3	D202	*E1	IC234	E2
C108	*A2	C201	D2	C300	*E4	D203	*E1	IC300	*E4
C109	A4	C202	*D2	C301	*E4	D204	*F2	IC301	*E4
C110	A4	C203	*D2	C302	C4	D205	*E2	IC302	C4
C111	*A4	C204	*F3	C305	*D4			IC303	*E4
C112	*A4	C205	*D2	C306	*D4	E101	A2	IC305	D4
C113	A2	C206	D2	C307	*D4	E102	C1	IC306	*C4
C114	*A2	C207	*D2	C308	*D4	E103	*B4	IC307	*D4
C115	*B2	C208	*D1	C309	D4	E104	*F4	IC308	D3
C116	*A4	C209	*D1	C310	D4			IC310	C3
C117	*A4	C210	E3	C311	D4	FB101	B2	IC400	*E4
C118	*B2	C211	D3	C312	D4	FB103	B1	IC401	C4
C119	B2	C212	*E3	C313	*D4	FB104	B1	IC402	*C4
C120	*B2	C213	*D3	C314	*D4	FB202	*D2	IC405	C4
C121	*A4	C214	D1	C315	*D4	FB208	*F3	IC406	C4
C122	B2	C215	*D1	C316	*D4	FB209	*F3	IC407	D4
C123	A2	C216	*F3	C317	*D4			IC411	*C4
C124	A2	C217	*D1	C318	*D4	IC100	B2	IC412	C4
C125	A2	C218	*D1	C319	*D4	IC101	D4	IC413	C3
C126	*A3	C219	*D1	C320	*D4	IC102	*B2	IC414	*C4
C127	*A3	C220	*D2	C321	D4	IC103	*B2	IC415	*B4
C128	*B2	C221	*D2	C322	*D4	IC104	C2	IC416	*C3
C129	*A2	C222	*E3	C323	*D4	IC105	B2	IC133	*C1
C130	*B2	C223	*D2	C324	*D4	IC106	A2	IC304	D4
C131	*A3	C224	*D1	C325	*D4	IC107	A4		
C132	*A2	C225	*E3	C326	*C4	IC108	*B2	L100	A1
C133	*C1	C226	*D3	C327	*C3	IC109	A3	L101	*A1
C134	*A3	C227	*E4	C328	*D4	IC110	A3	L102	*A2
C135	A1	C228	*E4	C329	*D3	IC111	*C2	L103	*A2
C136	A1	C229	*D3	C330	*D3	IC112	*B2	L104	*A4
C137	*A1	C230	*D3	C332	*D3	IC113	A3	L105	*A1
C138	*A2	C231	*D1	C333	*D3	IC114	*E4	L106	B3
C139	*A3	C232	*D3	C338	*C3	IC115	*C2	L107	B3
C140	*B2	C233	*D3	C339	*D4	IC116	A3	L108	*B1
C141	*C2	C234	*D1	C340	*D4	IC117	*D4	L109	*A1
C142	*A3	C235	D1	C400	*C4	IC118	*B3	L110	*A1
C143	*B1	C236	*D1	C401	*B4	IC119	*C2	L111	*A2
C145	*E4	C237	*D3	C402	*B3	IC120	*C2	L112	*B1
C146	*A3	C238	*D1	C403	B4	IC121	*C2	L201	*D2
C147	*B1	C239	*D1	C404	B3	IC122	B3	L202	*D2
C148	*B3	C240	*D1	C405	*A4	IC123	C3	L203	*E3
C149	*B3	C241	D2	C406	A4	IC124	B3	L204	*D3
C150	C1	C242	*D3	C407	A3	IC125	*B2	L205	*D2
C151	*B1	C243	*D1	C408	B4	IC126	C3	L206	*D2
C152	*C1	C244	*D2	C409	*A3	IC127	C3	L207	*D1
C153	*B3	C245	*D1	C410	*B4	IC128	C1	L208	*D1
C154	*B3	C246	*D1	C411	B3	IC129	C2	L401	B3
C155	*C1	C247	*D3	C412	B4	IC130	C2	L402	B3
C156	*B3	C248	*D4	C413	*B3	IC131	*C1	L403	B4
C157	B1	C249	D4	C414	*A4	IC132	*F4	L404	B4
C158	*B3	C250	*E4	C415	B4	IC134	*B1	L405	A4
C159	B1	C251	*E4	C416	*B4	IC135	*C2	L406	A4
C160	*B3	C252	*E4	C417	B4	IC136	*A2		
C161	B1	C253	*E3	C418	*B4	IC137	A2	Q100	*B2
C162	*B3	C254	*E3	C419	*A4	IC138	*B2	Q101	*A4
C163	*C2	C255	*E1	C420	C4	IC139	*B2	Q102	*A4
C164	*C3	C256	E1	C421	*C4	IC141	B3	Q103	*A3
C165	*C2	C257	E2	C422	C4	IC142	B3	Q104	B2
C166	*C3	C258	*D3	C423	*C4	IC200	*F1	Q105	*A3
C167	C3	C259	*E1	C424	C4	IC201	B3	Q106	*B3
C168	D2	C260	*E1	C425	*C4	IC202	D2	Q107	*B3
C169	A2	C261	*E1	C426	C4	IC203	*F3	Q108	C2
C170	*D2	C262	E1	C427	*C4	IC204	F3	Q109	*C2
C171	*C1	C263	E1	C429	C4	IC205	*F3	Q110	*C2
C172	*C2	C264	E1	C430	C4	IC206	*E3	Q111	*F4
C173	*C2	C265	E1	C431	*C4	IC207	*E3	Q112	*B2
C174	*C1	C266	*E1	C432	*C4	IC208	D2	Q201	*F2
C175	*C2	C267	*E1	C433	*B4	IC209	*E3	Q202	*F2
C176	*C1	C268	*F1	C434	C4	IC210	D1		
C177	D2	C269	*F1	C435	*D4	IC211	*F4	R100	*F4
C178	*C1	C270	*F3	C436	D4	IC212	*D3	R101	*A4
C179	*C2	C271	*E4	C440	*B4	IC213	*D4	R102	*A4
C180	*C2	C272	*F2	C441	*F4	IC214	D1	R103	*A4
C181	*C2	C273	*F2	C451	C4	IC215	*D3	R104	*B2
C182	*C2	C274	*E1	C454	*C3	IC216	E1	R105	*A4
C183	*C3	C275	*F3	C455	*C4	IC217	E4	R106	*A4
C184	*C2	C276	*A4	C456	*B4	IC218	*E2	R107	A2
C185	C2	C277	F1	C102	F4	IC219	E2	R108	A2
C186	D4	C278	*F1	C144	F4	IC220	*D4	R109	A2
C187	*D4	C279	C3			IC221	*E1	R110	A2
C188	C2	C280	*E3	CN51	C4	IC222	B2	R111	*A4
C189	C3	C281	*D3	CN52	E4	IC223	F1	R112	*B2
C190	*F4	C282	*E2			IC224	F1	R113	*B2
C191	A1	C283	F3	CP101	B2	IC225	F4	R114	*B2
C192	A1	C284	F2	CP103	B1	IC226	F2	R115	A2
C193	*A1	C285	*F3	CP201	D3	IC227	F2	R116	*B2

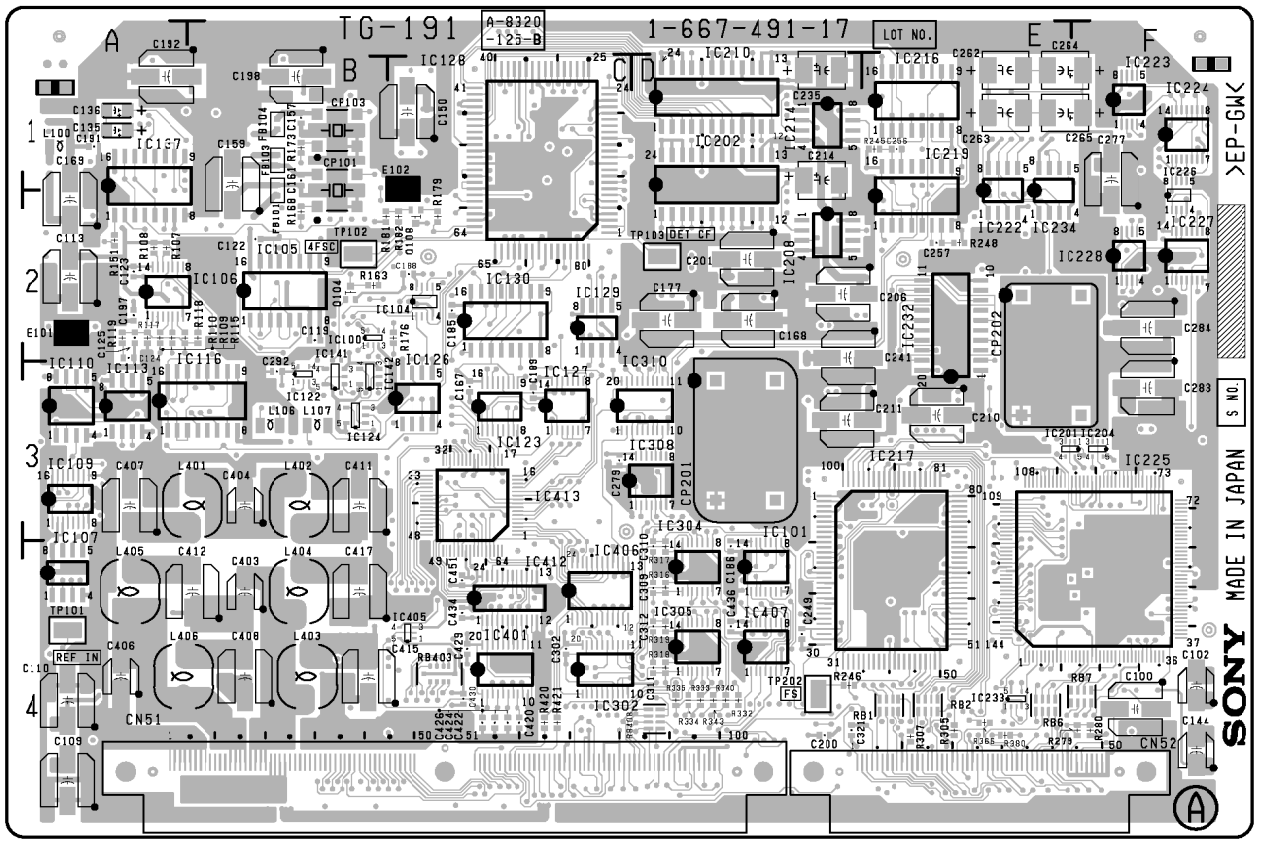

TG-191 -A SIDE-
SUFFIX: -17

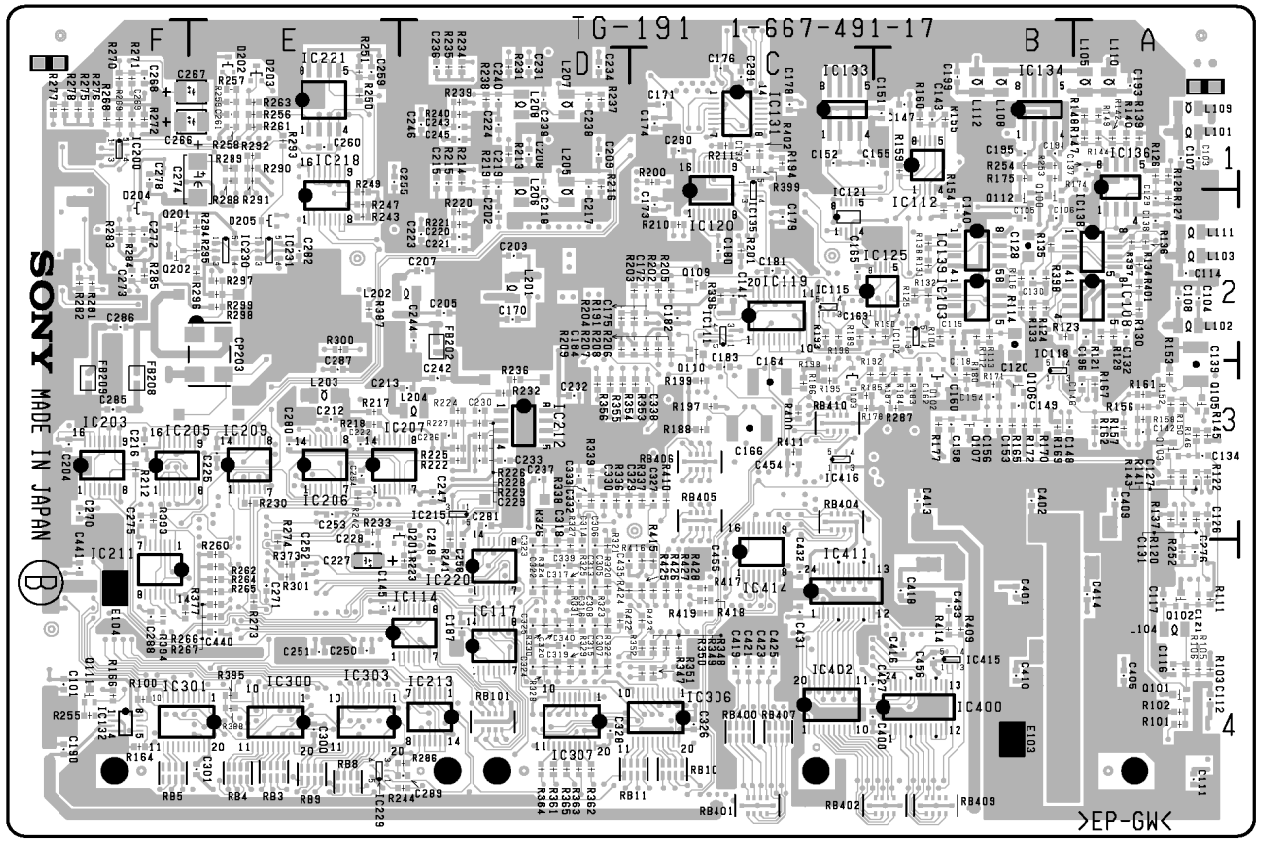

TG-191 -B SIDE-
SUFFIX: -17

R117	A2	R209	*D2	R301	*E4	RB401	*C4
R118	B2	R210	*C2	R305	E4	RB402	*B4
R119	A2	R211	*C1	R307	E4	RB403	C4
R120	*A3	R212	*F3	R316	D4	RB404	*C3
R121	*A2	R213	*D1	R317	D4	RB405	*C3
R122	*A3	R214	*D1	R318	D4	RB406	*C3
R123	*B2	R215	*D1	R319	D4	RB407	*C4
R124	*B2	R216	*D1	R320	*D4	RB408	D4
R125	*B2	R217	*E3	R321	*D4	RB409	*B4
R126	*A1	R218	*E3	R322	*D4	RB410	*C3
R127	*A2	R219	*D1	R323	*D4		
R128	*A1	R220	*D2	R324	*D4	TP101	A4
R129	*A2	R221	*D2	R325	*D4	TP102	B2
R130	*A2	R222	*D3	R326	*D4	TP103	D2
R131	*B2	R223	*D4	R327	*D4	TP202	D4
R132	*B2	R224	*D3	R328	*D4		
R133	*B2	R225	*D3	R329	*D4	*:B SIDE	
R134	*A2	R226	*D3	R330	*D4		
R135	*B2	R227	*D3	R331	*D4		
R136	*A2	R228	*D3	R332	D4		
R137	*A3	R229	*D3	R333	D4		
R138	*B2	R230	*E3	R334	D4		
R139	*A1	R231	*D1	R335	D4		
R140	*A1	R232	*D3	R336	*D3		
R141	*A3	R233	*E3	R337	*C3		
R142	*A1	R234	*D1	R338	*D3		
R143	*A3	R235	*D1	R339	*D3		
R144	*A1	R236	*D3	R340	D4		
R145	*A3	R237	*D1	R343	D4		
R146	*A3	R238	*D1	R347	*C4		
R147	*A1	R239	*D1	R348	*C4		
R148	*A1	R240	*D1	R349	*C4		
R149	*A1	R241	*D3	R350	*C4		
R150	*A3	R242	*E3	R351	*C4		
R151	A2	R243	*E2	R352	*C4		
R152	*A3	R244	*D4	R353	*C3		
R153	*A3	R245	E1	R354	*D3		
R154	*B2	R246	D4	R355	*D3		
R155	*B1	R247	*E2	R356	*D3		
R156	*A3	R248	E2	R351	*D4		
R157	*A3	R249	*E2	R352	*D4		
R158	*A3	R250	*E1	R353	*D4		
R159	*B1	R251	*E1	R354	*D4		
R160	*B1	R252	*A4	R355	*D4		
R161	*A3	R253	*B1	R356	E4		
R162	*A3	R254	*B1	R373	*E4		
R163	B2	R255	*F4	R377	*F4		
R164	*F4	R256	*E1	R330	E4		
R165	*B3	R257	*E1	R337	*E2		
R166	*F4	R258	*E1	R338	*E4		
R167	*A3	R259	*E1	R393	*F3		
R168	B2	R260	*E4	R394	*F4		
R169	*B3	R261	*E1	R395	*E4		
R170	*B3	R262	*E4	R396	*C2		
R171	*B3	R263	*E1	R397	*A2		
R172	*B3	R264	*E4	R398	*B2		
R173	B1	R265	*E4	R399	*C1		
R174	*B1	R266	*E4	R400	*C3		
R175	*B1	R267	*E4	R401	*A2		
R176	C2	R268	*F1	R402	*C1		
R177	*B3	R269	*F1	R409	*B4		
R178	*C3	R270	*F1	R410	*C3		
R179	C2	R271	*F1	R411	*C3		
R180	*B3	R272	*F1	R414	*B4		
R181	B2	R273	*E4	R415	*C4		
R182	C2	R274	*E4	R416	*C4		
R183	*B3	R275	*F1	R417	*C4		
R184	*B3	R276	*F1	R418	*C4		
R185	*C3	R277	*F1	R419	*C4		
R186	*C3	R278	*F1	R420	C4		
R187	*B3	R279	F4	R421	C4		
R188	*C3	R280	F4	R422	*D4		
R189	C2	R281	*F2	R423	*C4		
R190	*B2	R282	*F2	R424	*D4		
R191	*C2	R283	*F2	R425	*C4		
R192	*C3	R284	*F2	R426	*C4		
R193	*C2	R285	*F2	R427	*C4		
R194	*C1	R286	*D4	R428	*C4		
R195	*C3	R287	*B3				
R196	*C2	R288	*E1	RB1	E4		
R197	*C3	R289	*E1	RB2	E4		
R198	*C3	R290	*E1	RB3	*E4		
R199	*C3	R291	*E1	RB4	*E4		
R200	*C1	R292	*E1	RB5	*F4		
R201	*C2	R293	*E1	RB6	E4		
R202	*C2	R294	*E2	RB7	F4		
R203	*C2	R295	*E2	RB8	*E4		
R204	*D2	R296	*E2	RB9	*E4		
R205	*C2	R297	*E2	RB10	*C4		
R206	*C2	R298	*E2	RB11	*C4		
R207	*C2	R299	*E2	RB101	*D4		
R208	*C2	R300	*E2	RB400	*C4		

VFD(1-803-786-11)

C3	*B1	R1	*B1	R135	D3
C4	*D1	R7	A2	R136	D3
C5	*B1	R16	*B1	R137	A3
C6	*B1	R17	*B1	R138	B2
C7	*C1	R18	B2	R139	C2
C10	*C2	R19	*B3	R140	D2
C11	*C2	R20	*B2	R141	D2
C12	B3	R21	B3	R142	C3
C13	*C2	R22	*B3	R143	*D2
C14	*D2	R23	B2	R144	D3
C15	*D2	R24	*B3	R145	B2
C16	D1	R25	*B3	R145	C3
C17	D1	R26	*B2	R147	D3
C18	C1	R27	*D2	R148	*B2
C19	C1	R28	*D2	R149	*C2
C20	C1	R30	*C1	R150	*D2
C21	C1	R31	*B1	R151	*A2
C22	B1	R32	*A2	R152	B3
C23	B1	R34	*D1	R153	*A3
C24	B1	R35	*D1	R154	B3
C25	B1	R37	*D2	R155	*A2
C26	A1	R38	*D2	R155	*A3
C27	*A1	R39	*D2	R157	A1
C28	A1	R40	B1	R158	A1
C29	A2	R41	A1	R159	A1
C30	A2	R42	A1	R160	A1
C31	A2	R43	A1	R161	A1
C32	A2	R44	*B1	R162	A1
C33	*B1	R45	B2	R163	A1
C34	*B1	R46	*A3	R164	*A1
C35	*B1	R50	A1	R165	A1
C36	*B3	R58	A1	R165	A2
C37	*B3	R62	B3	R171	A2
C38	A2	R63	*B2	R172	A2
C39	A3	R64	B2	R180	B3
C40	*B3	R65	C2	R181	*B1
C41	*B3	R66	C2	R182	*C1
C42	*B3	R67	C2	R183	*B1
C43	A1	R68	*D2	R184	*B1
C44	*B1	R69	D2	R185	*D3
C45	*A2	R70	B1		
C46	B3	R71	C2	SW1	B2
C47	*B1	R72	*C2	SW2	B2
C48	A2	R73	C3	SW3	C2
C49	A2	R74	D3	SW4	C2
C50	A1	R75	B3	SW5	C2
C51	*D1	R76	C3	SW6	D2
C52	A2	R77	C3	SW7	D2
C53	*B3	R78	D3		
		R79	D3	T1	*B2
CN1	*A2	R80	A1		
CN2	B3	R81	A1	TP1	A2
CN4	A3	R82	A3	TP2	A3
		R83	B2	TP3	*A2
D1	*B3	R85	*A3	TP4	*A2
D2	*B3	R89	A3	TP5	*A2
D3	B2	R90	A1	TP6	*A2
D4	*C2	R91	A2	TP7	*B1
D5	B2	R92	A2		
D6	*A2	R93	A2	U1	*C1
		R94	A2	U3	*C1
F1	*B2	R95	A1	U4	B1
		R99	A3	U6	D1
L1	*B2	R100	*B3	U7	D1
		R101	*B3	U8	D1
LED4	A2	R102	*B3	U9	D1
LED5	B3	R103	*A1	U10	C1
LED9	A3	R107	A1	U11	C1
		R110	*A1	U12	C1
Q1	B2	R111	A1	U13	C1
Q2	*A2	R113	A1	U14	B1
Q3	*C2	R114	A2	U15	B1
Q4	*B1	R115	B3	U21	*B3
Q5	B2	R116	*A1	U23	B1
Q6	A2	R117	*A1	U24	A2
Q7	B2	R118	*A1	U25	*B3
Q8	C2	R119	*A1	U26	*B3
Q9	D2	R120	A2	U27	B1
Q10	D2	R121	B2	U28	A3
Q11	C3	R122	B2	U29	A2
Q12	C3	R123	C2	U30	*A1
Q13	C3	R124	C2		
Q14	D3	R125	D2	X1	*B1
Q15	D3	R126	D2	X2	*A2
Q16	C2	R127	B1		
Q17	*C3	R128	C2	ZD1	*B2
Q18	*D2	R129	C2	ZD2	B2
Q19	*A2	R130	C2	ZD3	*C2
Q21	A3	R131	D2		
Q22	*C3	R132	C3	*:B SIDE	
Q23	A1	R133	C3		
Q24	A2	R134	C3		

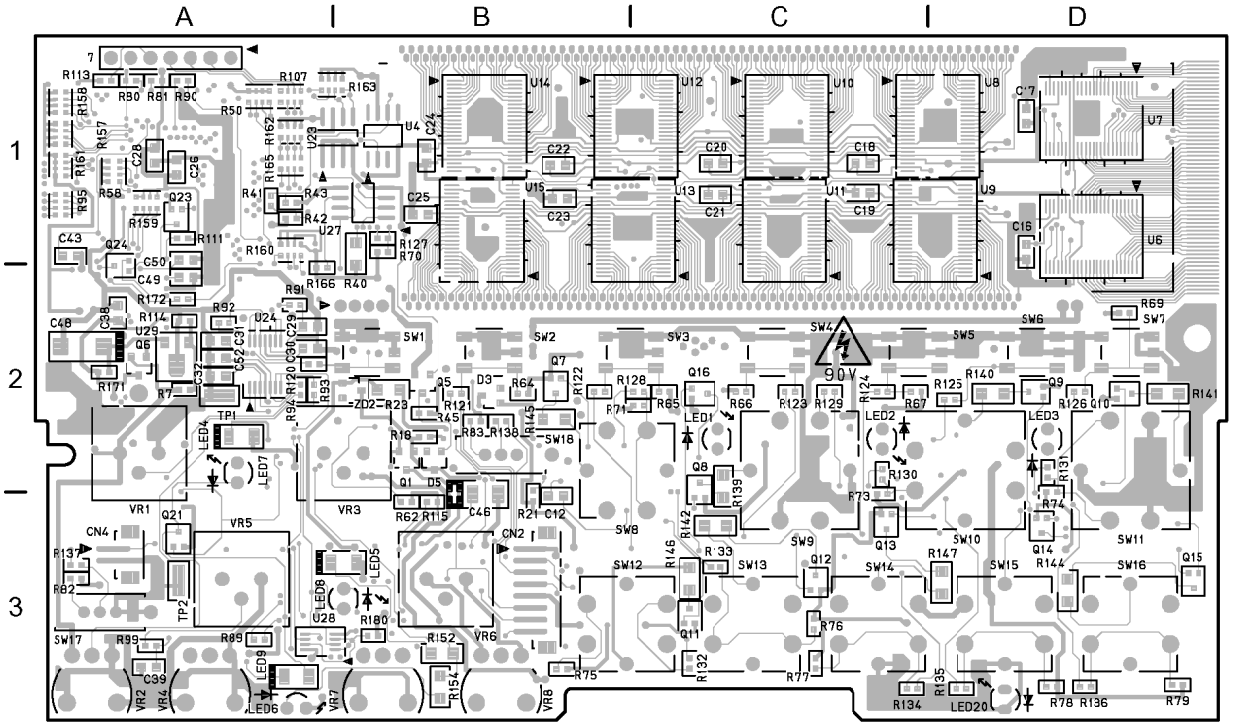

VFD -A SIDE-
SUFFIX: -11

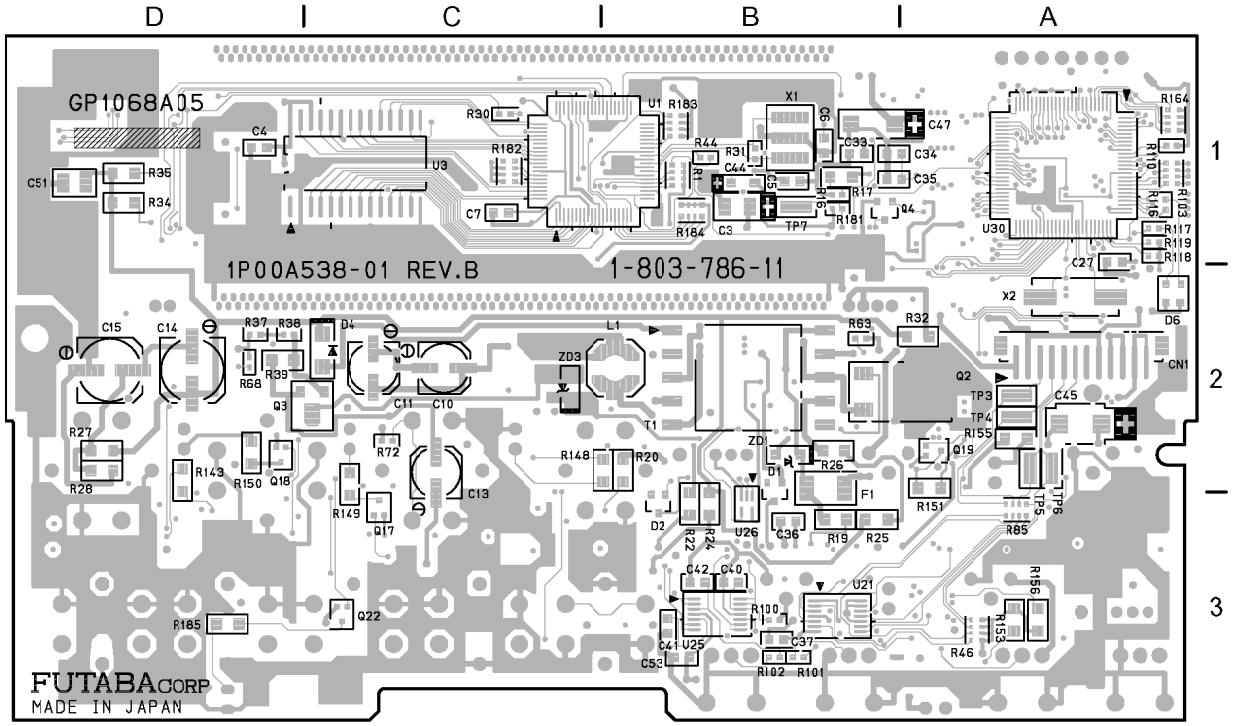

VFD -B SIDE-
SUFFIX: -11

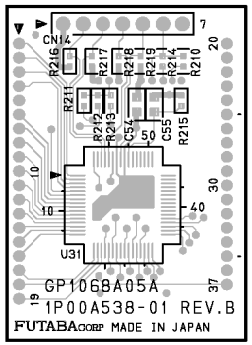

LCD -A SIDE-
SUFFIX: -11

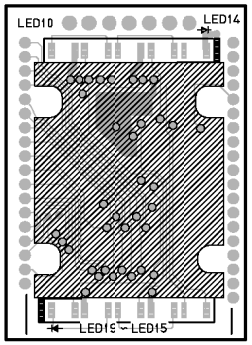

LCD -B SIDE-
SUFFIX: -11

VPR-34(1-667-493-13)

C100	*E4	C334	H5	IC202	*D1	R215	*F2	R402	D4
C101	*D4	C335	G5	IC203	G2	R217	*F1	R403	B5
C102	*D3	C336	*G5	IC204	*F3	R218	*F2	R404	B5
C103	*D3	C337	H4	IC205	*F1	R219	*F2	R405	*C5
C104	*E3	C338	H5	IC206	*F1	R223	*G1	R406	D4
C105	*E3	C339	H5	IC207	*G2	R221	*G1	R407	D4
C106	C1	C340	H4	IC208	*F2	R222	*G1	R408	D4
C107	C2	C341	G4	IC209	*G1	R223	H2	R409	D4
C108	C3	C342	H5	IC210	*G1	R224	*G1	R410	D4
C109	C1	C343	H4	IC211	*H2	R225	*G1	R411	D4
C110	C2	C344	*G4	IC212	*G2	R225	H2	R412	D4
C111	C3	C400	A5	IC213	*F4	R227	*G1	R413	D4
C112	B1	C401	A4	IC214	*F4	R223	*H3	R414	E4
C113	B3	C402	A5	IC215	*F4	R229	*E5	R415	E4
C114	B2	C403	A4	IC300	*G4	R230	*H1	R416	E4
C115	A1	C404	A4	IC301	G3	R231	*F5	R417	E4
C116	A2	C407	A4	IC302	*G4	R232	*H2		
C117	A3	C408	A4	IC303	*H4	R233	*F4	RB100	*E5
C118	*B1	C409	*A5	IC304	*G4	R234	*H1	RB101	*D5
C119	*B2	C410	*A5	IC305	*G5	R235	*G1	RB102	*E5
C120	*B3	C411	A3	IC306	*G5	R236	*G2	RB103	E5
C200	*E2	C417	C4	IC307	*H5	R237	*G2	RB104	E5
C201	*E1	C418	*C4	IC400	C4	R238	*G2	RB105	E5
C202	*D1	C419	*C4	IC401	*B4	R239	G5	RB200	*G1
C203	*D1	C420	B4	IC402	*D4	R240	*G5	RB201	*F5
C204	F2	C421	B4	IC403	*E4	R241	*F5	RB202	*F5
C205	*G1	C422	*C4	IC404	*C4	R242	*G1	RB203	*F5
C206	*G2	C423	*B3	IC405	*E4	R243	*G5	RB204	*G5
C207	F3	C424	B5	IC406	B4	R241	E5	RB205	C5
C208	F2	C425	E4	IC407	B4	R245	F4	RB206	D5
C209	*G2			IC408	*C4	R300	G4	RB207	D5
C210	*F1	CL100	*E3	IC409	B4	R301	*G4	RB208	D5
C211	*F1	CL200	*F1	IC410	C4	R302	*G4	RB209	F5
C212	*F2	CL201	*G1	IC411	B3	R303	*G4	RB210	F5
C213	*F1	CL202	*G1	IC412	B3	R304	*G4	RB211	F5
C214	*F2	CL203	*G1			R305	*G4	RB212	F5
C215	*G3	CL204	*G1	L200	*F2	R306	*G4	RB213	*D5
C216	*F2	CL205	*F1	L300	G4	R307	*G4	RB214	*D5
C217	*F3			L301	*H4	R308	*G4	RB400	*C5
C218	*G1	CN41	C5	L302	*G4	R309	*G4	RB401	*C5
C219	*G1	CN42	G5	L303	*H4	R310	*G4	RB402	*D5
C220	*G1			L304	*H3	R311	*G3	RB403	*E5
C221	*G1	CP200	H2	L305	G5	R312	*G3	RB404	*C4
C222	H2	CP201	*H2	L401	*A5	R313	*G4	RB405	*C3
C223	*G1	CP202	H1	L402	A5	R314	*G3	RB406	*B3
C224	*H2	CP203	*H1			R315	*G4	RB407	*B4
C225	*H1			Q200	*H2	R316	*G4	RB408	C5
C226	*H2	D200	*F2	Q201	*H2	R317	*G3	RB409	C5
C227	*H1	D300	*G5	Q300	G4	R318	*G3	RB410	*C5
C228	*G2			Q301	*H3	R319	*H3	RB411	*C5
C229	*E5	E100	A5	Q302	*H3	R320	*H3	RB412	*C5
C230	*F5	E200	H1	Q303	*G4	R321	*H3		
C231	*F2	E201	*H1			R322	*G3	TP300	H5
C232	*G1	E300	H4	R101	*E4	R323	*G4	TP301	H5
C233	*G1	E301	*H4	R102	E4	R324	*G4		
C234	*G1	E400	*A3	R103	C1	R325	*H4	*:B SIDE	
C235	*G1			R104	C2	R326	*H4		
C236	*F4	FB200	*H3	R105	C2	R327	*H4		
C300	G4	FB201	*H1	R106	B1	R328	*H4		
C301	*G4	FB202	*H3	R107	B1	R329	*H4		
C302	*G4	FB203	*H1	R108	B1	R330	*H4		
C303	*G4	FL300	H3	R109	*B1	R331	H4		
C304	*G4	FL400	*A4	R110	*B2	R332	H4		
C305	G4	FL401	*A4	R111	*B3	R333	H4		
C306	*G4			R112	A1	R334	H4		
C307	G4	IC100	E3	R113	A1	R335	H4		
C308	*G4	IC101	C1	R114	A2	R336	H4		
C309	*G4	IC102	C2	R115	*A1	R337	H4		
C310	*G4	IC103	C3	R116	*A2	R338	G4		
C311	*G3	IC104	*C1	R117	*A3	R339	*G5		
C312	*G3	IC105	*C1	R118	*B1	R340	G5		
C313	*G3	IC106	*C2	R119	*B2	R341	*G5		
C314	*G3	IC107	*C1	R120	*B3	R342	H4		
C315	*G3	IC108	*C2	R121	C1	R343	G5		
C316	*H3	IC109	*C3	R122	C1	R344	H4		
C317	*H3	IC110	B1	R123	C2	R345	H4		
C318	*G4	IC111	B2	R200	D1	R346	*G5		
C319	G5	IC112	B3	R201	*E1	R347	*H5		
C320	*G3	IC113	*B1	R202	*D1	R348	H4		
C321	*G4	IC114	*B2	R203	F1	R349	H5		
C322	*G4	IC115	*B2	R204	*F1	R350	H5		
C323	*H4	IC116	A1	R205	*F1	R351	H4		
C324	*H4	IC117	A2	R206	*G1	R352	*H5		
C325	*H4	IC118	A3	R207	G2	R353	*H5		
C326	G4	IC119	*A1	R208	G1	R354	G5		
C327	H4	IC120	*A2	R209	G1	R355	*G5		
C328	G4	IC121	*A2	R210	G1	R356	*G5		
C329	G4	IC122	C1	R211	*G3	R357	G4		
C330	G4	IC123	C2	R212	*F1	R358	G4		
C331	*G5	IC124	C3	R213	*G2	R359	H4		
C332	*G5	IC200	E1	R214	*G2	R400	D4		
C333	*G5	IC201	*E1	R215	*F1	R401	*C5		

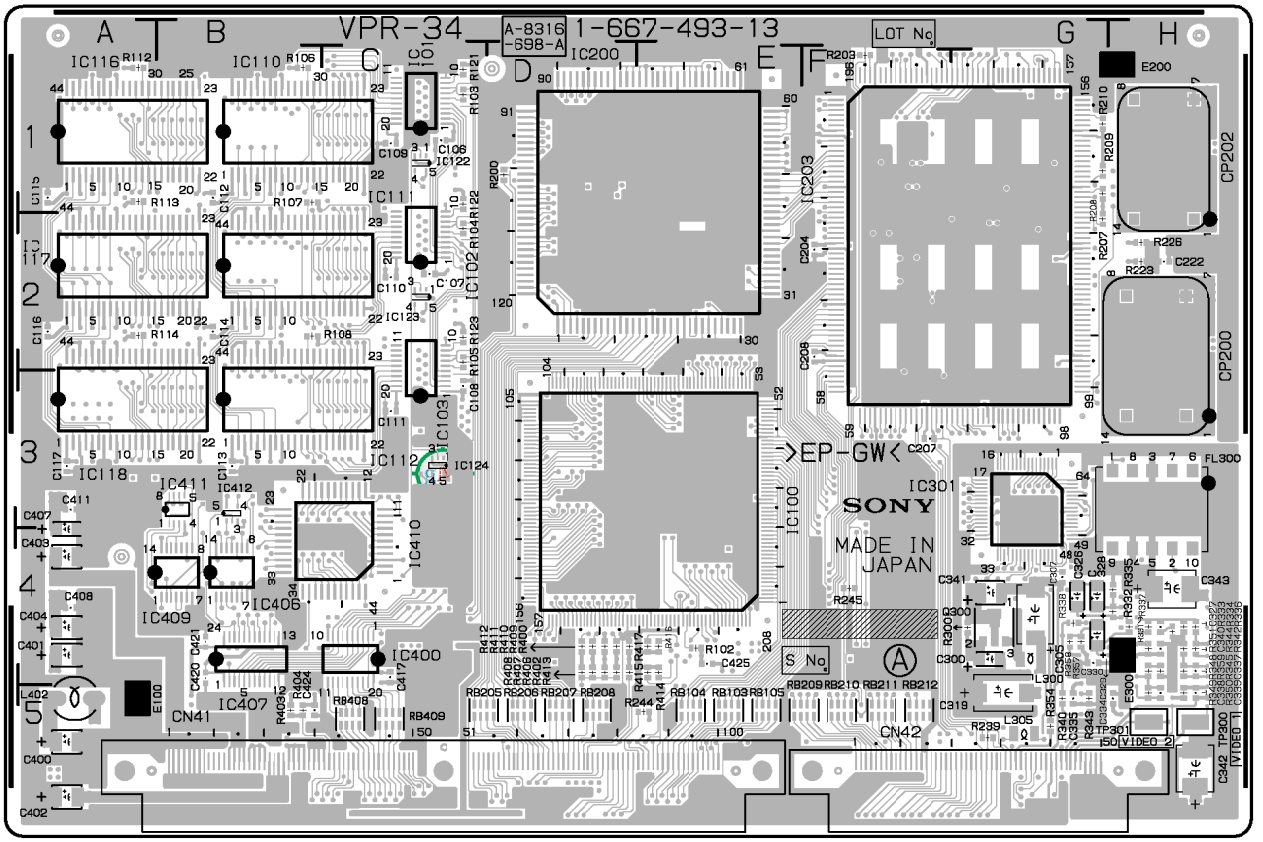

VPR-34 -A SIDE-
SUFFIX: -13

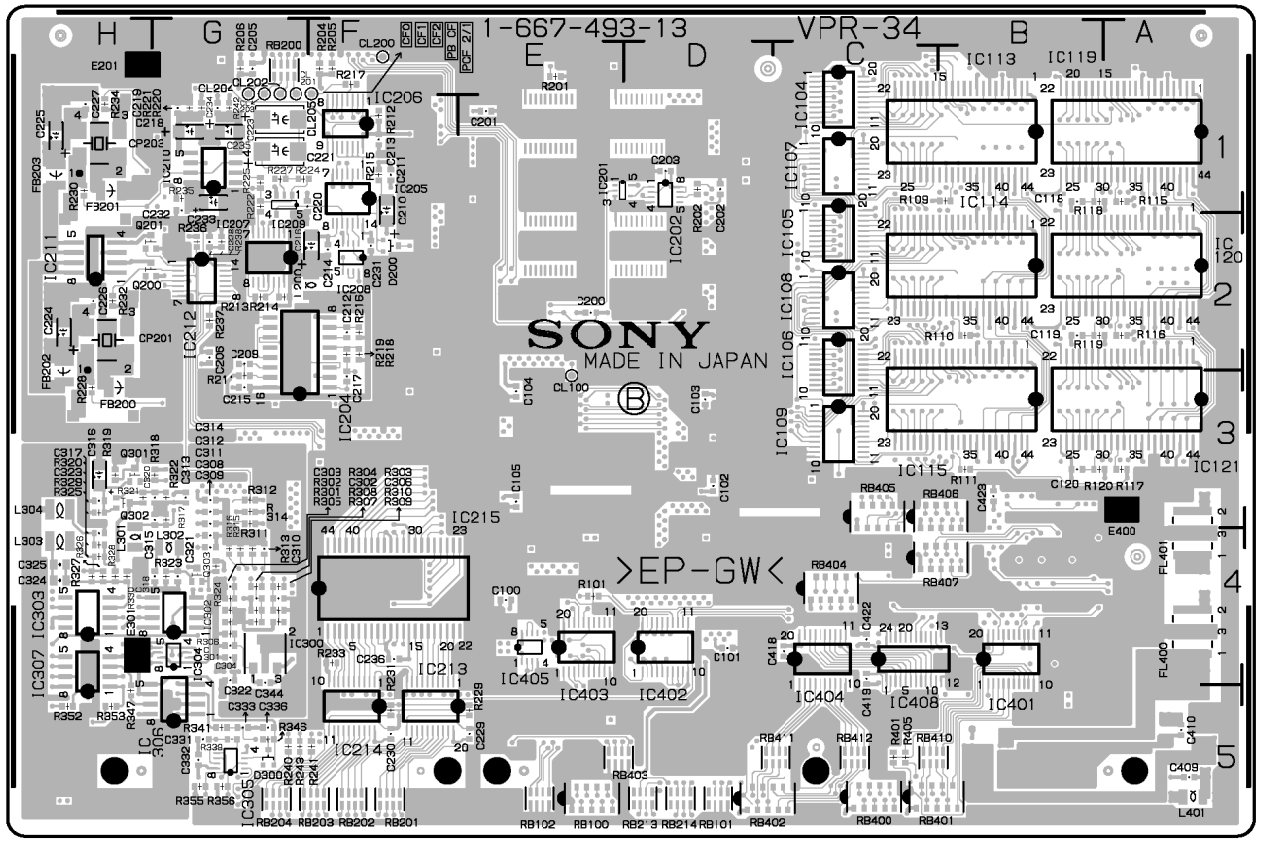

VPR-34 -B SIDE-
SUFFIX: -13

DNW-A28 (J, SY)
DNW-A28P (SY) J, E
9-967-867-01

Sony Corporation
Broadcasting & Professional Systems Company

Printed in Japan
1999. 10 08
©1999